This is a digital copy of a book that was preserved for generations on library shelves before it was carefully scanned by Google as part of a project to make the world's books discoverable online.

It has survived long enough for the copyright to expire and the book to enter the public domain. A public domain book is one that was never subject to copyright or whose legal copyright term has expired. Whether a book is in the public domain may vary country to country. Public domain books are our gateways to the past, representing a wealth of history, culture and knowledge that's often difficult to discover.

Marks, notations and other marginalia present in the original volume will appear in this file - a reminder of this book's long journey from the publisher to a library and finally to you.

Usage guidelines

Google is proud to partner with libraries to digitize public domain materials and make them widely accessible. Public domain books belong to the public and we are merely their custodians. Nevertheless, this work is expensive, so in order to keep providing this resource, we have taken steps to prevent abuse by commercial parties, including placing technical restrictions on automated querying.

We also ask that you:

+ *Make non-commercial use of the files* We designed Google Book Search for use by individuals, and we request that you use these files for personal, non-commercial purposes.
+ *Refrain from automated querying* Do not send automated queries of any sort to Google's system: If you are conducting research on machine translation, optical character recognition or other areas where access to a large amount of text is helpful, please contact us. We encourage the use of public domain materials for these purposes and may be able to help.
+ *Maintain attribution* The Google "watermark" you see on each file is essential for informing people about this project and helping them find additional materials through Google Book Search. Please do not remove it.
+ *Keep it legal* Whatever your use, remember that you are responsible for ensuring that what you are doing is legal. Do not assume that just because we believe a book is in the public domain for users in the United States, that the work is also in the public domain for users in other countries. Whether a book is still in copyright varies from country to country, and we can't offer guidance on whether any specific use of any specific book is allowed. Please do not assume that a book's appearance in Google Book Search means it can be used in any manner anywhere in the world. Copyright infringement liability can be quite severe.

About Google Book Search

Google's mission is to organize the world's information and to make it universally accessible and useful. Google Book Search helps readers discover the world's books while helping authors and publishers reach new audiences. You can search through the full text of this book on the web at `http://books.google.com/`

L

HARVARD LAW LIBRARY

Received. 1911 26 1911

This is a Key-Numbered Volume

Each syllabus paragraph in this volume is marked with the topic and section number under which the point will eventually appear in the American Digest System. The lawyer is led from that syllabus to the exact place in the Digest where we, as digest makers, have placed the other cases on the same point —***This is the Key-Number Annotation***

UNITED STATES
CIRCUIT COURTS OF APPEALS
REPORTS

WITH ANNOTATIONS

WITH TABLE OF CASES IN THE UNITED STATES CIRCUIT COURTS OF APPEALS WHICH HAVE BEEN PASSED UPON BY THE SUPREME COURT OF THE UNITED STATES

VOLUME 133

ST. PAUL
WEST PUBLISHING CO.
1915

COPYRIGHT, 1915
BY
WEST PUBLISHING COMPANY

(133 C.C.A.)

JUL 26 1915

JUDGES

OF THE

UNITED STATES CIRCUIT COURTS OF APPEALS AND THE DISTRICT COURTS

FIRST CIRCUIT

Hon. OLIVER WENDELL HOLMES, Circuit Justice..... Washington, D. C.
Hon. WILLIAM L. PUTNAM, Circuit Judge.....Portland, Me.
Hon. FREDERIC DODGE, Circuit Judge.....Boston, Mass.
Hon. GEO. H. BINGHAM, Circuit Judge .....Concord, N. H.
Hon. CLARENCE HALE, District Judge, Maine.....Portland, Me.
Hon. JAS. M. MORTON, Jr., District Judge, Massachusetts.....Boston, Mass.
Hon. EDGAR ALDRICH, District Judge, New Hampshire.....Littleton, N. H.
Hon. ARTHUR L. BROWN, District Judge, Rhode Island.....Providence, R. I.

SECOND CIRCUIT

Hon. CHARLES E. HUGHES, Circuit Justice.....Washington, D. C.
Hon. E. HENRY LACOMBE, Circuit Judge.....New York, N. Y.
Hon. ALFRED C. COXE, Circuit Judge.....New York, N. Y.
Hon. HENRY G. WARD, Circuit Judge.....New York, N. Y.
Hon. HENRY WADE ROGERS, Circuit Judge .....New Haven, Conn.
Hon. EDWIN S. THOMAS, District Judge, Connecticut.....New Haven, Conn.
Hon. THOMAS I. CHATFIELD, District Judge, E. D. New York.....Brooklyn, N. Y.
Hon. VAN VECHTEN VEEDER, District Judge, E. D. New York.....Brooklyn, N. Y.
Hon. GEORGE W. RAY, District Judge, N. D. New York.....Norwich, N. Y.
Hon. CHARLES M. HOUGH, District Judge, S. D. New York.....New York, N. Y.
Hon. LEARNED HAND, District Judge, S. D. New York .....New York, N. Y.
Hon. JULIUS M. MAYER, District Judge, S. D. New York.....New York, N. Y.
Hon. AUGUSTUS N. HAND, District Judge, S. D. New York .....New York, N. Y.
Hon. JOHN R. HAZEL, District Judge, W. D. New York.....Buffalo, N. Y.
Hon. JAMES L. MARTIN, District Judge, Vermont.....Brattleboro, Vt.

THIRD CIRCUIT

Hon. MAHLON PITNEY, Circuit Justice.....Washington, D. C.
Hon. JOSEPH BUFFINGTON, Circuit Judge.....Pittsburg, Pa.
Hon. JOHN B. McPHERSON, Circuit Judge.....Philadelphia, Pa.
Hon. VICTOR B. WOOLLEY, Circuit Judge .....Wilmington, Del.
Hon. EDWARD G. BRADFORD, District Judge, Delaware.....Wilmington, Del.
Hon. JOHN RELLSTAB, District Judge, New Jersey.....Trenton, N. J.
Hon. THOS. G. HAIGHT, District Judge, New Jersey.....Jersey City, N. J.
Hon. J. WHITAKER THOMPSON, District Judge, E. D. Pennsylvania..Philadelphia, Pa.
Hon. OLIVER B. DICKINSON, District Judge, E. D. Pennsylvania .....Philadelphia, Pa.
Hon. CHAS. B. WITMER, District Judge, M. D. Pennsylvania.....Sunbury, Pa.
Hon. CHARLES P. ORR, District Judge, W. D Pennsylvania.....Pittsburg, Pa.
Hon. W. H. SEWARD THOMSON, District Judge, W. D. Pennsylvania .....Pittsburg, Pa.

FOURTH CIRCUIT

Hon. EDWARD D. WHITE, Circuit Justice.....Washington, D. C.
Hon. JETER C. PRITCHARD, Circuit Judge.....Asheville, N. C.
Hon. CHAS. A. WOODS, Circuit Judge .....Marion, S. C.
Hon. MARTIN A. KNAPP, Circuit Judge.....Washington, D. C.
Hon. JOHN C. ROSE, District Judge, Maryland.....Baltimore, Md.
Hon. HENRY G. CONNOR, District Judge, E. D. North Carolina .....Wilson, N. C.
Hon. JAMES E. BOYD, District Judge, W. D. North Carolina.....Greensboro, N. C.
Hon. HENRY A. MIDDLETON SMITH, District Judge, E. and W. D. S. C..Charleston, S. C.
Hon. EDMUND WADDILL, Jr., District Judge, E. D. Virginia .....Richmond, Va.
Hon. HENRY CLAY McDOWELL, District Judge, W. D. Virginia.....Lynchburg, Va.
Hon. ALSTON G. DAYTON, District Judge, N. D. West Virginia.....Philippi, W. Va.
Hon. BENJAMIN F. KELLER, District Judge, S. D. West Virginia.....Charleston, W. Va.

FIFTH CIRCUIT

Hon. JOSEPH R. LAMAR, Circuit Justice.....Washington, D. C.
Hon. DON A. PARDEE, Circuit Judge.....Atlanta, Ga.
Hon. A. P. McCORMICK, Circuit Judge.....Waco, Tex.
Hon. RICHARD W. WALKER, Circuit Judge .....Huntsville, Ala.
Hon. HENRY D. CLAYTON, District Judge, N. and M. D. Alabama ....Montgomery, Ala.
Hon. WM. I. GRUBB, District Judge, N. D. Alabama.....Birmingham, Ala.
Hon. HARRY T. TOULMIN, District Judge, S. D. Alabama.....Mobile, Ala.
Hon. WM. B. SHEPPARD, District Judge, N. D. Florida.....Pensacola, Fla.
Hon. RHYDON M. CALL, District Judge, S. D. Florida.....Jacksonville, Fla.
Hon. WILLIAM T. NEWMAN, District Judge, N. D. Georgia.....Atlanta, Ga.
Hon. EMORY SPEER, District Judge, S. D. Georgia.....Macon, Ga.
Hon. RUFUS E. FOSTER, District Judge, E. D. Louisiana.....New Orleans, La.
Hon. ALECK BOARMAN, District Judge, W. D. Louisiana.....Shreveport, La.
Hon. HENRY C. NILES, District Judge, N. and S. D. Mississippi.....Kosciusko, Miss.
Hon. GORDON RUSSELL, District Judge, E. D. Texas.....Sherman, Tex.
Hon. EDWARD R. MEEK, District Judge, N. D. Texas.....Dallas, Tex.
Hon. WALLER T. BURNS, District Judge, S. D. Texas.....Houston, Tex.
Hon. THOMAS S. MAXEY, District Judge, W. D. Texas .....Austin, Tex.

SIXTH CIRCUIT

Hon. WILLIAM R. DAY, Circuit Justice.....Washington, D. C.
Hon. JOHN W. WARRINGTON, Circuit Judge.....Cincinnati, Ohio.
Hon. LOYAL E. KNAPPEN, Circuit Judge.....Grand Rapids, Mich.
Hon. ARTHUR C. DENISON, Circuit Judge ..... Grand Rapids, Mich.
Hon. ANDREW M. J. COCHRAN, District Judge, E. D. Kentucky.....Maysville, Ky.
Hon. WALTER EVANS, District Judge, W. D. Kentucky.....Louisville, Ky.
Hon. ARTHUR J. TUTTLE, District Judge, E. D. Michigan.....Detroit, Mich.
Hon. CLARENCE W. SESSIONS, District Judge, W. D. Michigan ...Grand Rapids, Mich.
Hon. JOHN M. KILLITS, District Judge, N. D. Ohio.....Toledo, Ohio.
Hon. JOHN H. CLARKE, District Judge, N. D. Ohio ....Cleveland, Ohio.
Hon. JOHN E. SATER, District Judge, S. D. Ohio.....Columbus, Ohio.
Hon. HOWARD C. HOLLISTER, District Judge, S. D. Ohio.....Cincinnati, Ohio.
Hon. EDWARD T. SANFORD, District Judge, E. and M. D. Tennessee....Knoxville, Tenn.
Hon. JOHN E. McCALL, District Judge, W. D. Tennessee .....Memphis, Tenn.

SEVENTH CIRCUIT

Hon. JAMES CLARK McREYNOLDS, Circuit Justice ....Washington, D. C.
Hon. FRANCIS E. BAKER, Circuit Judge.....Goshen, Ind.
Hon. WILLIAM H. SEAMAN, Circuit Judge.....Sheboygan, Wis.
Hon. CHRISTIAN C. KOHLSAAT, Circuit Judge.....Chicago, Ill.

Hon. JULIAN W. MACK, Circuit Judge ..... Chicago, Ill.
Hon. KENESAW M. LANDIS, District Judge, N. D. Illinois ..... Chicago, Ill.
Hon. GEORGE A. CARPENTER, District Judge, N. D. Illinois ..... Chicago, Ill.
Hon. FRANCIS M. WRIGHT, District Judge, E. D. Illinois ..... Urbana, Ill.
Hon. J. OTIS HUMPRHEY, District Judge, S. D. Illinois ..... Springfield, Ill.
Hon. ALBERT B. ANDERSON, District Judge, Indiana ..... Indianapolis, Ind.
Hon. FERDINAND A. GEIGER, District Judge, E. D. Wisconsin ..... Milwaukee, Wis.
Hon. ARTHUR L. SANBORN, District Judge, W. D. Wisconsin ..... Madison, Wis.

EIGHTH CIRCUIT

Hon. WILLIS VAN DEVANTER, Circuit Justice ..... Washington, D. C.
Hon. WALTER H. SANBORN, Circuit Judge ..... St. Paul, Minn.
Hon. WILLIAM C. HOOK, Circuit Judge ..... Leavenworth, Kan.
Hon. ELMER B. ADAMS, Circuit Judge ..... St. Louis, Mo.
Hon. WALTER I. SMITH, Circuit Judge ..... Council Bluffs, Iowa.
Hon. JOHN E. CARLAND, Circuit Judge ..... Washington, D. C.
Hon. JACOB TRIEBER, District Judge, E. D. Arkansas ..... Little Rock, Ark.
Hon. F. A. YOUMANS, District Judge, W. D. Arkansas ..... Ft. Smith, Ark.
Hon. ROBERT E. LEWIS, District Judge, Colorado ..... Denver, Colo.
Hon. HENRY THOMAS REED, District Judge, N. D. Iowa ..... Cresco, Iowa.
Hon. SMITH McPHERSON, District Judge, S. D. Iowa ..... Red Oak, Iowa.
Hon. JOHN C. POLLOCK, District Judge, Kansas ..... Kansas City, Kan.
Hon. PAGE MORRIS, District Judge, Minnesota ..... Duluth, Minn.
Hon. WILBUR F. BOOTH, District Judge, Minnesota ..... Minneapolis, Minn.
Hon. DAVID P. DYER, District Judge, E. D. Missouri ..... St. Louis, Mo.
Hon. ARBA S. VAN VALKENBURGH, District Judge, W. D. Missouri ..... Kansas City, Mo.
Hon. W. H. MUNGER, District Judge, Nebraska ..... Omaha, Neb.
Hon. THOMAS C. MUNGER, District Judge, Nebraska ..... Lincoln, Neb.
Hon. WM. H. POPE, District Judge, New Mexico ..... Santa Fé, N. M.
Hon. CHARLES F. AMIDON, District Judge, North Dakota ..... Fargo, N. D.
Hon. RALPH E. CAMPBELL, District Judge, E. D. Oklahoma ..... Muskogee, Okl.
Hon. JOHN H. COTTERAL, District Judge, W. D. Oklahoma ..... Guthrie, Okl.
Hon. JAMES D. ELLIOTT, District Judge, South Dakota ..... Sioux Falls, S. D.
Hon. JOHN A. MARSHALL, District Judge, Utah ..... Salt Lake City, Utah.
Hon. JOHN A. RINER, District Judge, Wyoming ..... Cheyenne, Wyo.

NINTH CIRCUIT

Hon. JOSEPH McKENNA, Circuit Justice ..... Washington, D. C.
Hon. WILLIAM B. GILBERT, Circuit Judge ..... Portland, Or.
Hon. ERSKINE M. ROSS, Circuit Judge ..... Los Angeles, Cal.
Hon. WM. W. MORROW, Circuit Judge ..... San Francisco, Cal.
Hon. WM. H. HUNT, Circuit Judge ..... Washington, D. C.
Hon. WM. H. SAWTELLE, District Judge, Arizona ..... Tucson, Ariz.
Hon. OLIN WELLBORN, District Judge, S. D. California ..... Los Angeles, Cal.
Hon. BENJ. F. BLEDSOE, District Judge, S. D. California ..... Los Angeles, Cal.
Hon. WM. C. VAN FLEET, District Judge, N. D. California ..... San Francisco, Cal.
Hon. MAURICE T. DOOLING, District Judge, N. D. California ..... San Francisco, Cal.
Hon. FRANK S. DIETRICH, District Judge, Idaho ..... Boise, Idaho.
Hon. GEO. M. BOURQUIN, District Judge, Montana ..... Butte, Mont.
Hon. EDWARD S. FARRINGTON, District Judge, Nevada ..... Carson City, Nev.
Hon. CHARLES E. WOLVERTON, District Judge, Oregon ..... Portland, Or.
Hon. ROBERT S. BEAN, District Judge, Oregon ..... Portland, Or.
Hon. FRANK H. RUDKIN, District Judge, E. D. Washington ..... Spokane, Wash.
Hon. EDWARD E. CUSHMAN, District Judge, W. D. Washington ..... Seattle, Wash.
Hon. JEREMIAH NETERER, District Judge, W. D. Washington ..... Seattle, Wash.

*

CASES REPORTED

Page

American Woolen Co. v. Stewart.. 326
Armour & Co. v. Harcrow..... 218
Austrian v. Central Trust Co. of Illinois 87
Aylor, Robertson v..... 672

Barges Nos. 8, 9, and 27..... 260
Barkley, First Nat. Bank of Watseka, Ill., v..... 670
Barrett, Groom v..... 670
Bateman v. Southern Oregon Co... 605
B. Borchardt Co., Yaryan Naval Stores Co. v..... 488
Beatson Copper Co. v. Pedrin..... 29
Behrens, Illinois Cent. R. Co. v... 639
Bell, Smith v..... 517
Belle Fourche Valley Water Users' Ass'n, Magruder v..... 524
Benjamin v. Central Trust Co..... 91
Benner Line v. Pendleton..... 349
Bergdoll v. Harrigan..... 615
Bidwell, Huff v..... 646
Bigger, Texas & P. R. Co. v..... 673
Board of Com'rs of Osage County, Okl., v. United States..... 87
Board of Com'rs of Weld County, Colo., Union Pac. R. Co. v..... 392
Boarman, United States v..... 487
Borchardt Co., Yaryan Naval Stores Co. v..... 488
Borland v. Central Trust Co. of Illinois 82
Borough of Du Bois v. Pancoast.. 662
Bourn, Tomlinson v..... 673
Bowron v. Sibert..... 669
Boyd, Hirlinger v..... 398
Boyd v. Wall..... 402
Boyd v. Wall..... 407
Brahenberg, Cache Creek Min. Co. v..... 234
Brannan, United States v..... 559
Bravis v. Chicago, M. & St. P. R. Co. 228
Bray v. United States Fidelity & Guaranty Co., two cases..... 669
Breyer Printing Co., In re..... 82
Bryan, Tucker v..... 428
Bryan County State Bank of Caddo, Okl., Eubank v..... 37

Page

Bullock, W. H. McElwain Co. v... 634
Burkett, Roller v..... 672
Burr Mfg. & Supply Co., In re... 126
Busch v. Stromberg-Carlson Tel. Mfg. Co..... 244

Cache Creek Min. Co. v. Brahenberg 234
Campbell, Spokane & I. E. R. Co. v..... 370
Canton Ins. Office v. Independent Transp. Co..... 207
Carlson, International Harvester Co. of America v..... 430
Carr Co., Diamond Patent Co. v... 310
Central Trust Co., Benjamin v.... 91
Central Trust Co., Moseson v..... 93
Central Trust Co., Peller v. 93
Central Trust Co. of Illinois, Austrian v..... 87
Central Trust Co. of Illinois, Borland v..... 82
Chandler, In re..... 148
Chicago, M. & St. P. R. Co., Bravis v..... 228
Chicago, St. P., M. & O. R. Co. v. Kroloff 377
Chicago, St. P., M & O. R. Co. v. Rorvig 625
Christopher & Simpson Architectural Iron & Foundry Co., National Surety Co. v..... 672
Chung Kin Tow v. Flynn..... 666
City of Harrisburg v. New York Continental Jewell Filtration Co. 282
City of Lee's Summit v. Jewel Tea Co..... 637
City of Macon v. Huff..... 646
City of Omaha, Omaha Electric Light & Power Co. v..... 52
Clark v. Hamilton..... 223
Clark, Schiebel Toy & Novelty Co. v., three cases..... 490
Clayton, Pitts Banking Co. v..... 148
Clements, James v..... 170
Clinchfield Coal Corp. v. Steinman 585
Columbia River Packers' Ass'n v. McGowan 190

Page
Conley Camera Co. v. Multiscope & Film Co. 96
Conner, Midland Val. R. Co. v. 628
Consolidated Louisiana Lumber Co., Southern Pine Lumber Co. v. 479
Crown Cork & Seal Co. of Baltimore City v. Sterling Cork & Seal Co. 297
Curtin, The 519

Davis Sewing Mach. Co. v. New Departure Mfg. Co. 505
Denver Chemical Mfg. Co. v. Lilley 73
Diamond Patent Co. v. S. E. Carr Co. 310
Di Cola, In re 437
Dieter-Wenzel Const. Co. v. Eppler 670
Donahoo, Moore v. 171
Douglas County, Midland Guaranty & Trust Co. v. 274
Dovey Coal Co., In re 117
Dreyer v. Perkins 599
Du Bois v. Pancoast 662
Duckworth Co., Farmers' Oil & Guano Co. v. 278
Dunn, Vacuum Engineering Co. v. 674
Dunsmuir v. Scott 194

East Coast Lumber Co., In re 428
Eastern Oil & Rendering Co. v. Thompson 198
Einstein, Georgia Southern & F. R. Co. v. 657
Elenore, The 447
Eppler, Dieter-Wenzel Const. Co. v. 670
Erie Baking Co. v. Hubbard Mill Co. 489
Eubank v. Bryan County State Bank of Caddo, Okl. 37
Evansville Contract Co., In re ... 669

Fairbanks, Morse & Co. v. Nelson 212
Farmers' Oil & Guano Co. v. Duckworth Co. 278
Fidelity Title & Trust Co., Kansas City Pipe Line Co. v., three cases 181
First Nat. Bank of Watseka, Ill., v. Barkley 670
Flynn, Chung Kin Tow v. 666
Foreman-Blades Lumber Co., Parrish v. 251

Page
Franklin v. Monning Dry Goods Co. 601
Fulkerson v. Shaffer 271

Galbraith v. Robson-Hilliard Grocery Co. 46
Gardiner Inv. Co., Jackson Co. v. 266
Gardiner Inv. Co., Jackson Co. v. 324
Georgia Southern & F. R. Co. v. Einstein 657
Gidionsen, Louisiana Excursion Co. v. 445
Goldstein, In re 91
Goldstein, In re 93
Gordon, United States Trust Co. v. 117
Great Northern R. Co. v. Harman 631
Groom v. Barrett 670

Hall, Hermann v. 619
Hall-Baker Grain Co., Medlin Mill. Co. v. 671
Hall-Epps Clothing Co. Rawlins v. 594
Halstead, New York, N. H. & H. R. Co. v. 1
Hamilton, Clark v. 223
Hammond, Stearns Salt & Lumber Co. v. 411
Harcrow, Armour & Co. v. 218
Harkins, Potlatch Lumber Co. v. .. 132
Harman, Great Northern R. Co. v. 631
Harrigan, Bergdoll v. 615
Harris, Luxury Fruit Co. v. 434
Harris v. Marsh 407
Harrisburg v. New York Continental Jewell Filtration Co. 282
Hartford Fire Ins. Co., Texas & P. R. Co. v. 673
Haskell Golf Ball Co., Sporting Goods Sales Co. v. 317
Hawkins, United States v. 121
Hermann v. Hall 619
Hirlinger v. Boyd 398
Houston v. United States 562
Hubbard Mill Co., Erie Baking Co. v. 489
Huff v. Bidwell 646
Huff, City of Macon v. 646
Huttig Sash & Door Co. v. Stitt .. 641

Illinois Cent. R. Co. v. Behrens .. 639
Independent Transp. Co., Canton Ins. Office v. 207
International Harvester Co. of America v. Carlson 430

Page
Iowa Land & Trust Co. v. United States 121

Jaburg, Read Mach. Co. v..... 672
Jackson Co. v. Gardiner Inv. Co... 266
Jackson Co. v. Gardiner Inv. Co. 324
James v. Clements..... 170
Jewel Tea Co., City of Lee's Summit v..... 637
J. Rosenbaum Grain Co., Medlin Mill. Co. v..... 671
Julius Bros., In re..... 328

Kansas City Pipe Line Co. v. Fidelity Title & Trust Co., three cases 181
Kansas Natural Gas Co., Landon v..... 181
Karnaca, United States Gypsum Co. v..... 61
Kentucky Coal Lands Co. v. Mineral Development Co..... 151
Kettle River Co., St. Avit v..... 76
Kroloff, Chicago, St. P., M. & O. R. Co. v..... 377
Kruegel v. Standard Savings & Loan Ass'n..... 671
Kurtz Lake Shore Electric R. Co. v..... 521

Lake Shore Electric R. Co. v. Kurtz 521
Landon v. Kansas Natural Gas Co. 181
Landon v. McPherson..... 181
Lane v. Sargent..... 231
Lane Lumber Co., In re..... 398
Lane Lumber Co., In re..... 402
Lane Lumber Co., In re..... 407
Lee Leong v. United States..... 34
Lee's Summit v. Jewel Tea Co... 637
Lewis, Leonhardt & Co. v. Southern R. Co..... 237
Li Chiong, United States v..... 31
Lilley, Denver Chemical Mfg. Co. v..... 73
Linton v. Omaha Wholesale Produce Market House Co..... 336
Louisiana Excursion Co. v. Gidionsen 445
Lovewell v. Schoolfield..... 449
Luken, In re..... 94
Luxury Fruit Co. v. Harris..... 434

McCord, United States v..... 674
McElwain Co. v. Bullock..... 634

Page
McGowan, Columbia River Packers' Ass'n v..... 190
McKey v. Steger..... 94
McKinnon v. New York Assets Realization Co..... 255
Macon v. Huff..... 646
McPherson, Landon v..... 181
Magruder v. Belle Fourche Valley Water Users' Ass'n..... 524
Manhattan Canning Co. v. Wilson 322
Mark, National Tube Co. v..... 13
Marnet Oil & Gas Co. v. Staley.. 108
Marsh, Harris v..... 407
Medlin Mill. Co. v. Hall-Baker Grain Co..... 671
Medlin Mill. Co. v. J. Rosenbaum Grain Co..... 671
Merchants' Nat. Bank, Sterne v. 66
Meyersdale Coal Co., New York & Philadelphia Coal & Coke Co. v. 441
Midland Guaranty & Trust Co. v. Douglas County..... 274
Midland Val. R. Co. v. Conner... 628
Mineral Development Co., Kentucky Coal Lands Co. v..... 151
Minneapolis, St. P. & S. S. M. R. Co., Rebillard v..... 9
Monning Dry Goods Co., Franklin v..... 601
Moore v. Donahoo..... 171
Moseson v. Central Trust Co..... 93
Multiscope & Film Co., Conley Camera Co. v..... 96
Mutual Life Ins. Co. of New York v. Powell..... 417

National Surety Co. v. Christopher & Simpson Architectural Iron & Foundry Co..... 672
National Tube Co. v. Mark..... 13
Nelson, Fairbanks, Morse & Co. v. 212
New Departure Mfg. Co., Davis Sewing Mach. Co. v..... 505
New York Assets Realization Co., McKinnon v..... 255
New York Continental Jewell Filtration Co., City of Harrisburg v..... 282
New York, N. H. & H. R. Co. v. Halstead 1
New York & Philadelphia Coal & Coke Co. v. Meyersdale Coal Co. 441
Norfolk Sand & Gravel Corp. v. Ohio Locomotive Crane Co..... 135

Page
Northern Commercial Co. v. United States..... 140
Northern Commercial Co. v. United States..... 143
Nubone Corset Co., Spirella Co. v. 102

Ohio Locomotive Crane Co., Norfolk Sand & Gravel Co. v..... 135
Omaha, Omaha Electric Light & Power Co. v..... 52
Omaha Electric Light & Power Co. v. City of Omaha..... 52
Omaha Wholesale Produce Market House Co., Linton v..... 336
Orr, In re..... 87

Pancoast, Borough of Du Bois v. 662
Parrish v. Foreman-Blades Lumber Co..... 251
Peck v. Richter..... 590
Pedrin, Beatson Copper Co. v..... 29
Peller v. Central Trust Co..... 93
Pendleton, Benner Line v..... 349
People's Light Co. v. Rathbun-Jones Engineering Co..... 523
Perkins, Dreyer v..... 599
Perkins, Prudence Coal Co. v..... 421
Perkins Lumber Co., In re..... 599
Pitts Banking Co. v. Clayton..... 148
Porter, In re..... 126
Postal Tel. Co., Western Union Tel. Co. v..... 385
Potlatch Lumber Co. v. Harkins.. 132
Powell, Mutual Life Ins. Co. of New York v..... 417
Prudence Coal Co. v. Perkins..... 421

Rathbun-Jones Engineering Co., People's Light Co. v..... 523
Rawlins v. Hall-Epps Clothing Co. 594
Read, Spencer v..... 360
Read Mach. Co. v. Jaburg..... 672
Rebillard v. Minneapolis, St. P. & S. S. M. R. Co..... 9
Richter, Peck v..... 590
Robertson v. Aylor..... 672
Robson-Hilliard Grocery Co., Galbraith v..... 46
Roller v. Burkett..... 672
Rorvig, Chicago, St. P., M. & O. R. Co. v..... 625
Rosenbaum Grain Co., Medlin Mill. Co. v..... 671

Page
St. Avit v. Kettle River Co..... 76
Samson, The..... 260
Sargent, Lane v..... 231
Schiebel Toy & Novelty Co. v. Clark, three cases..... 490
Schoolfield, Lovewell v..... 449
Schwartz v. United States..... 576
Scoric v. United States..... 581
Scott, Dunsmuir v..... 194
S. E. Carr Co., Diamond Patent Co. v..... 310
Shaffer, Fulkerson v..... 271
Sibert, Bowron v..... 669
Smith v. Bell..... 517
Southern Oregon Co., Bateman v. 605
Southern Pine Lumber Co. v. Consolidated Louisiana Lumber Co. 479
Southern R. Co., Lewis, Leonhardt & Co. v..... 237
Spencer v. Read..... 360
Spirella Co. v. Nubone Corset Co. 102
Spokane & I. E. R. Co. v. Campbell 370
Sporting Goods Sales Co. v. Haskell Golf Ball Co..... 317
Staley, Marnet Oil & Gas Co. v... 108
Standard Savings & Loan Ass'n, Kruegel v..... 671
Stearns Salt & Lumber Co. v. Hammond 411
Steger, McKey v..... 94
Steinman, Clinchfield Coal Corp. v. 585
Sterling Cork & Seal Co., Crown Cork & Seal Co. of Baltimore City v..... 297
Sterne v. Merchants' Nat. Bank.. 66
Stewart, American Woolen Co. v. 326
Stitt, Huttig Sash & Door Co. v... 641
Stromberg-Carlson Tel. Mfg. Co., Busch v..... 244

Taylor Grain Co., In re..... 66
Texas Planing Mill & Mfg. Co., In re..... 641
Texas & P. R. Co. v. Bigger..... 673
Texas & P. R. Co. v. Hartford Fire Ins. Co..... 673
Thompson, Eastern Oil & Rendering Co. v..... 198
Titanic, The..... 673
Tomlinson v. Bourn..... 673
Tsunezo Kusano, United States v. 36
Tsurukichi Nakao, United States v. 35
Tucker v. Bryan..... 428

Page
Union Pac. R. Co. v. Board of Com'rs of Weld County, Colo... 392
United States v. Board of Com'rs of Osage County, Okl..... 87
United States v. Boarman..... 487
United States v. Brannan..... 559
United States v. Hawkins..... 121
United States, Houston v..... 562
United States, Iowa Land & Trust Co. v..... 121
United States, Lee Leong v..... 34
United States v. Li Chiong..... 31
United States v. McCord..... 674
United States, Northern Commercial Co. v..... 140
United States, Northern Commercial Co. v..... 143
United States, Schwartz v..... 576
United States, Scoric v..... 581
United States v. Tsunezo Kusano 36
United States v. Tsurukichi Nakao 35
United States Fidelity & Guaranty Co., Bray v., two cases..... 669
United States Gypsum Co. v. Karnaca 61
United States Trust Co. v. Gordon 117

Vacuum Engineering Co. v. Dunn 674

Wall, Boyd v..... 402
Wall, Boyd v..... 407
Western Union Tel. Co. v. Postal Tel. Co..... 385
W. H. McElwain Co. v. Bullock.. 634
Wilckens v. Wilckens..... 202
Wilson, Manhattan Canning Co. v. 322

Yaryan Naval Stores Co. v. B. Borchardt Co..... 488

*

CASES REPORTED

ARRANGED UNDER THEIR RESPECTIVE CIRCUITS

FIRST CIRCUIT.

American Woolen Co. v. Stewart.. 326

Chung Kin Tow v. Flynn..... 666

Eastern Oil & Rendering Co. v. Thompson 198

Jackson Co. v. Gardiner Inv. Co... 266
Jackson Co. v. Gardiner Inv. Co. 324

Lane v. Sargent..... 231

McElwain Co. v. Bullock..... 634

Sporting Goods Sales Co. v. Haskell Golf Ball Co..... 317

W. H. McElwain Co. v. Bullock.. 634

SECOND CIRCUIT.

Benner Line v. Pendleton..... 349
Burr Mfg. & Supply Co., In re... 126

Julius Bros., In re..... 328

McKinnon v. New York Assets Realization Co..... 255

New York, N. H. & H. R. Co. v. Halstead 1

Porter, In re..... 126

Read Mach. Co. v. Jaburg..... 672

Titanic, The..... 673

Vacuum Engineering Co. v. Dunn 674

THIRD CIRCUIT.

Bergdoll v. Harrigan..... 615
Borough of Du Bois v. Pancoast.. 662

City of Harrisburg v. New York Continental Jewell Filtration Co. 282

Di Cola, In re..... 437
Du Bois v. Pancoast..... 662

Erie Baking Co. v. Hubbard Mill Co. 489

Harrisburg v. New York Continental Jewell Filtration Co.... 282

New York & Philadelphia Coal & Coke Co. v. Meyersdale Coal Co. 441

Spirella Co. v. Nubone Corset Co. 102

FOURTH CIRCUIT.

Bray v. United States Fidelity & Guaranty Co., two cases..... 669

Clinchfield Coal Corp. v. Steinman 585
Curtin, The..... 519

East Coast Lumber Co., In re.... 428
Evansville Contract Co., In re... 669

Norfolk Sand & Gravel Corp. v. Ohio Locomotive Crane Co..... 135

Parrish v. Foreman-Blades Lumber Co..... 251
Prudence Coal Co. v. Perkins..... 421

Schwartz v. United States..... 576
Scoric v. United States..... 581

Tucker v. Bryan..... 428

FIFTH CIRCUIT.

Bowron v. Sibert..... 669

Chandler, In re..... 148
City of Macon v. Huff..... 646

Dieter-Wenzel Const. Co. v. Eppler 670
Dreyer v. Perkins..... 599

Farmers' Oil & Guano Co. v. Duckworth Co..... 278
First Nat. Bank of Watseka, Ill., v. Barkley..... 670
Franklin v. Monning Dry Goods Co. 601

Georgia Southern & F. R. Co. v. Einstein 657
Groom v. Barrett..... 670

Huff v. Bidwell..... 646
Huttig Sash & Door Co. v. Stitt.. 641

Illinois Cent. R. Co. v. Behrens.. 639

James v. Clements..... 170

Kruegel v. Standard Savings & Loan Ass'n..... 671

Luxury Fruit Co. v. Harris..... 434

Macon v. Huff..... 646
Marnet Oil & Gas Co. v. Staley.. 108
Medlin Mill. Co. v. Hall-Baker Grain Co..... 671
Medlin Mill. Co. v. J. Rosenbaum Grain Co..... 671
Mutual Life Ins. Co. of New York v. Powell..... 417

National Surety Co. v. Christopher & Simpson Architectural Iron & Foundry Co..... 672

People's Light Co. v. Rathbun-Jones Engineering Co..... 523
Perkins Lumber Co., In re..... 599
Pitts Banking Co. v. Clayton..... 148

Rawlins v. Hall-Epps Clothing Co. 594
Robertson v. Aylor..... 672
Roller v. Burkett..... 672

Southern Pine Lumber Co. v. Consolidated Louisiana Lumber Co. 479

Texas Planing Mill & Mfg. Co., In re..... 641
Texas & P. R. Co. v. Bigger..... 673
Texas & P. R. Co. v. Hartford Fire Ins. Co..... 673
Tomlinson v. Bourn..... 673

United States v. Boarman..... 487
United States v. Brannan..... 559
United States v. McCord..... 674

Yaryan Naval Stores Co. v. B. Borchardt Co..... 488

SIXTH CIRCUIT.

Crown Cork & Seal Co. of Baltimore City v. Sterling Cork & Seal Co..... 297

Davis Sewing Mach. Co. v. New Departure Mfg. Co..... 505
Dovey Coal Co., In re..... 117

Elenore, The..... 447

Kentucky Coal Lands Co. v. Mineral Development Co..... 151

Lake Shore Electric R. Co. v. Kurtz 521
Lewis, Leonhardt & Co. v. Southern R. Co..... 237
Lovewell v. Schoolfield..... 449

National Tube Co. v. Mark..... 13

Schiebel Toy & Novelty Co. v. Clark, three cases..... 490
Stearns Salt & Lumber Co. v. Hammond 411

United States Trust Co. v. Gordon 117

SEVENTH CIRCUIT.

Austrian v. Central Trust Co. of Illinois 87

Benjamin v. Central Trust Co..... 91
Borland v. Central Trust Co. of Illinois 82
Breyer Printing Co., In re..... 82

Goldstein, In re..... 91
Goldstein, In re..... 93

Luken, In re..... 94

McKey v. Steger..... 94
Moseson v. Central Trust Co..... 93

Orr, In re..... 87

Peller v. Central Trust Co..... 93

EIGHTH CIRCUIT.

Armour & Co. v. Harcrow..... 218

Board of Com'rs of Osage County, Okl., v. United States..... 87
Bravis v. Chicago, M. & St. P. R. Co. 228
Busch v. Stromberg-Carlson Tel. Mfg. Co..... 244

Chicago, St. P., M. & O. R. Co. v. Kroloff 377
Chicago, St. P., M. & O. R. Co. v. Rorvig 625
City of Lee's Summit v. Jewel Tea Co..... 637
Clark v. Hamilton..... 223
Conley Camera Co. v. Multiscope & Film Co..... 96

Denver Chemical Mfg. Co. v. Lilley 73

Eubank v. Bryan County State Bank of Caddo, Okl..... 37

Fulkerson v. Shaffer..... 271

Galbraith v. Robson-Hilliard Grocery Co..... 46

Harris v. Marsh..... 407

International Harvester Co. of America v. Carlson..... 430
Iowa Land & Trust Co. v. United States 121

Kansas City Pipe Line Co. v. Fidelity Title & Trust Co., three cases 181

Landon v. Kansas Natural Gas Co. 181
Landon v. McPherson..... 181
Lee's Summit v. Jewel Tea Co... 637
Linton v. Omaha Wholesale Produce Market House Co..... 336
Louisiana Excursion Co. v. Gidionsen 445

Magruder v. Belle Fourche Valley Water Users' Ass'n..... 524
Midland Guaranty & Trust Co. v. Douglas County..... 274
Midland Val. R. Co. v. Conner... 628

Omaha Electric Light & Power Co. v. City of Omaha..... 52

Peck v. Richter..... 590

Rebillard v. Minneapolis, St. P. & S. S. M. R. Co..... 9

St. Avit v. Kettle River Co..... 76
Smith v. Bell..... 517
Spencer v. Read..... 360
Sterne v. Merchants' Nat. Bank.. 66

Taylor Grain Co., In re..... 66

Union Pac. R. Co. v. Board of Com'rs of Weld County, Colo... 392
United States v. Board of Com'rs of Osage County, Okl..... 87
United States v. Hawkins..... 121
United States Gypsum Co. v. Karnaca 61

Wilckens v. Wilckens..... 202

NINTH CIRCUIT.

Barges Nos. 8, 9, and 27..... 260
Bateman v. Southern Oregon Co... 605
Beatson Copper Co. v. Pedrin..... 29
Boyd v. Wall..... 402
Boyd v. Wall..... 407

Cache Creek Min. Co. v. Brahenberg 234
Canton Ins. Office v. Independent Transp. Co..... 207
Columbia River Packers' Ass'n v. McGowan 190

Diamond Patent Co. v. S. E. Carr Co. 310
Dunsmuir v. Scott..... 194

Fairbanks, Morse & Co. v. Nelson 212

Great Northern R. Co. v. Harman 631

Hermann v. Hall..... 619
Hirlinger v. Boyd..... 398
Houston v. United States..... 562

Lane Lumber Co., In re..... 398
Lane Lumber Co., In re..... 402
Lane Lumber Co., In re..... 407
Lee Leong v. United States..... 34

Manhattan Canning Co. v. Wilson 322
Moore v. Donahoo..... 171

Northern Commercial Co. v. United States..... 140
Northern Commercial Co. v. United States..... 143

Potlatch Lumber Co. v. Harkins.. 132

Samson, The..... 260
Spokane & I. E. R. Co. v. Campbell 370

United States v. Li Chiong..... 31
United States v. Tsunezo Kusano 36
United States v. Tsurukichi Nakao 35

Western Union Tel. Co. v. Postal Tel. Co..... 385

CASES PASSED UPON

CASES IN THE UNITED STATES CIRCUIT COURTS OF APPEALS WHICH HAVE BEEN PASSED UPON BY THE SUPREME COURT OF THE UNITED STATES

Henkel v. United States.....116 C. C. A. 165
Error. Judgment affirmed, 35 S. Ct. 536, 237 U. S. 43, 59 L. Ed. —.

Smith v. Guffey.....120 C. C. A. 436
Writ of Certiorari. Decree reversed, 35 S. Ct. 526, 237 U. S. 101, 59 L. Ed. —.

Smith v. Guffey.....120 C. C. A. 436
Writ of Certiorari. Decree reversed, 35 S. Ct. 532, 237 U. S. 120, 59 L. Ed. —.

United States v. Noble.....116 C. C. A. 654
Appeal. Decree reversed, 35 S. Ct. 532, 237 U. S. 74, 59 L. Ed. —.

INDEX TO NOTES

VOLUMES 125-133

For Index to Notes contained in volumes 1-124, see 124 C. C. A. xxxvii

ACTION.
Effect of error as to character or form of action. 129 C. C. A. 588.
Local or transitory actions as affecting jurisdiction of court. 133 C. C. A. 163.

ALIENS.
Liability for penalties and criminal prosecutions under Immigration Laws. 130 C. C. A. 89.

APPEAL AND ERROR.
Successive appeals or other proceedings for review in criminal prosecutions. 126 C. C. A. 5.
Stipulations as to contents of record on appeal or error in civil actions. 126 C. C. A. 435.
Appeal or other proceedings for review of award. 132 C. C. A. 561.

ARBITRATION AND AWARD.
Appeal or other proceedings for review of award. 132 C. C. A. 561.

ASSIGNMENTS.
Agreements to assign patents. 126 C. C. A. 200.
What law governs assignment of insurance policy. 130 C. C. A. 482.

BILLS AND NOTES.
What law governs negotiability of bills and notes. 125 C. C. A. 406.

CARRIERS.
Construction and operation of bill of lading as a receipt and as a contract. 125 C. C. A. 584.
Duties and liabilities of sleeping car companies. 128 C. C. A. 11.

COLLISION.
Inevitable accident as cause of collision. 125 C. C. A. 130.

CONSPIRACY.
Nature and elements of conspiracy as affecting civil liability. 131 C. C. A. 456.

CONSTITUTIONAL LAW.
Persons entitled to raise constitutional questions. 128 C. C. A. 391.

CONTEMPT.
Validity of mandate, order or proceeding as affecting contempt for disobedience. 126 C. C. A. 326.

CONTRACTS.
Agreements to be reduced to writing. 128 C. C. A. 229.

CORPORATIONS.
Defective incorporation or organization affecting liability for corporate debts and acts. 126 C. C. A. 80.
Rights of minority stockholders as to management of corporate affairs. 129 C. C. A. 481.

COURTS. See Federal Courts.

CRIMINAL LAW.
Successive appeals or other proceedings for review in criminal prosecutions. 126 C. C. A. 5.
Criminal prosecutions under Internal Revenue Laws. 127 C. C. A. 266.
Violations of White Slave Act. 130 C. C. A. 2.
Liability for penalties and criminal prosecutions under Immigration Laws. 130 C. C. A. 89.
Presumption of good character in criminal prosecutions. 132 C. C. A. 6.

DEPOSITIONS.
Signature, seal and authentication of deposition and return. 131 C. C. A. 2.

DISMISSAL AND NONSUIT.
Judgment against remaining party or parties after dismissal or nonsuit as to one or more coparties. 133 C. C. A. 3.

EMINENT DOMAIN.
Appropriation of streets or other highways to new or additional use. 127 C. C. A. 93.

EQUITY.
Equitable defenses in actions at law. 125 C. C. A. 5.

ESTOPPEL.
Estoppel to dispute validity of patent. 127 C. C. A. 395.

EVIDENCE.
Signature, seal and authentication of deposition and return. 131 C. C. A. 2.
Presumption of good character in criminal prosecutions. 132 C. C. A. 6.

EXECUTIVE DEPARTMENTS.
Encroachment by judiciary on executive or executive departments. 133 C. C. A. 535.

FEDERAL COURTS.
Consent of parties as to jurisdiction of federal courts. 127 C. C. A. 557.
Local or transitory actions as affecting jurisdiction of courts. 133 C. C. A. 163.
Encroachment by judiciary on executive or executive departments. 133 C. C. A. 535.

FIRES.
Fire escapes on buildings. 127 C. C. A. 5.

HOMESTEAD.
Rights acquired by homestead settlements and entries on public lands of the United States. 129 C. C. A. 3.

INDIANS.
Introducing intoxicating liquors into Indian country. 131 C. C. A. 171.

INJUNCTION.
Parties to injunction proceedings. 130 C. C. A. 303.

INSANE PERSONS.
Conclusiveness and effect of adjudication in inquisition as to sanity. 132 C. C. A. 102.

INSURANCE.
What law governs assignment of insurance policy. 130 C. C. A. 482.

INTERNAL REVENUE.
Criminal prosecutions under Internal Revenue Laws. 127 C. C. A. 266.

INTOXICATING LIQUORS.
Introducing intoxicating liquors into Indian country. 131 C. C. A. 171.

JUDGES.
Objections to judge and proceedings thereon. 130 C. C. A. 586.

JUDGMENT.
Mandamus to enforce payment of judgments against municipalities. 129 C. C. A. 250.
Conclusiveness and effect of adjudication in inquisition as to sanity. 132 C. C. A. 102.
Judgment against remaining party or parties after dismissal or nonsuit as to one or more coparties. 133 C. C. A. 3.

JUDGMENT—Cont'd.
Conclusiveness of judgment as dependent on the capacity in which the parties are sued. 133 C. C. A. 341.

JUDICIAL SALES.
Confirmation of judicial sales. 125 C. C. A. 265.

JURISDICTION.
Of federal courts. See Federal Courts.
Local or transitory actions as affecting jurisdiction of court. 133 C. C. A. 163.

LIMITATION OF ACTIONS.
Limitations applicable to actions on liabilities created by statute other than for penalties or forfeitures. 132 C. C. A. 395.

MANDAMUS.
Mandamus to enforce payment of judgments against municipalities. 129 C. C. A. 250.

MASTER AND SERVANT.
Hours of service of employés. 125 C. C. A. 485.

MUNICIPAL CORPORATIONS.
Mandamus to enforce payment of judgments against municipalities. 129 C. C. A. 250.

NEGLIGENCE.
Care required as to invitees on premises. 129 C. C. A. 94.

PARTIES.
Consent of parties as to jurisdiction of federal courts. 127 C. C. A. 557.
Parties to injunction proceedings. 130 C. C. A. 303.
Judgment against remaining party or parties after dismissal or nonsuit as to one or more coparties. 133 C. C. A. 3.
Conclusiveness of judgment as dependent on the capacity in which the parties are sued. 133 C. C. A. 341.

PARTNERSHIP.
Misconduct of partner as cause for dissolution of firm. 133 C. C. A. 113.

PATENTS.
Agreements to assign patents. 126 C. C. A. 200.
Use or sale of invention in foreign country affecting patentability. 126 C. C. A. 578.
Estoppel to dispute validity of patent. 127 C. C. A. 395.
Application of old device to new use as patentable invention. 128 C. C. A. 60.
Aggregation of old elements as constituting invention. 132 C. C. A. 216.

PENALTIES.
Liability for penalties and criminal prosecutions under Immigration Laws. 130 C. C. A. 89.

PROSTITUTION.
Violations of White Slave Act. 130 C. C. A. 2.

PUBLIC LANDS.
Rights acquired by homestead settlement and entries on public lands of the United States. 129 C. C. A. 3.
Grants of railroad rights of way in public lands. 129 C. C. A. 362.

RAILROADS.
Grants of railroad rights of way in public lands. 129 C. C. A. 362.

REFERENCE.
Conclusiveness of report or findings on reference. 131 C. C. A. 289.

SALVAGE.
Salvage awards in federal courts. 128 C. C. A. 579.

STATUTES.
Limitations applicable to actions on liabilities created by statute other than for penalties or forfeitures. 132 C. C. A. 395.

STIPULATIONS.
Stipulations as to contents of record on appeal or error in civil actions. 126 C. C. A. 435.

TRUSTS.
Joint or several liability of cotrustees. 131 C. C. A. 571.

WATERS AND WATER COURSES.
Rights of way and other interests in land for conveyance of waters. 130 C. C. A. 185.

WHITE SLAVERY.
Violations of White Slave Act. 130 C. C. A. 2.

NOTES IN THIS VOLUME

Page

Judgment against Remaining Party or Parties after Dismissal or Nonsuit as to One or More Coparties..... 3

Misconduct of Partner as Cause for Dissolution of Firm..... 113

Local or Transitory Actions as Affecting Jurisdiction of Court... 163

Conclusiveness of Judgment as Dependent on the Capacity in which the Parties are Sued..... 341

Encroachment by Judiciary on Executive or Executive Departments 535

CASES

ARGUED AND DETERMINED

IN THE

UNITED STATES CIRCUIT COURTS OF APPEALS

(218 Fed. 455)

NEW YORK, N. H. & H. R. CO. v. HALSTEAD.

(Circuit Court of Appeals, Second Circuit. November 10, 1914.)

No. 80.

1. JUDGMENT (§ 237*)—DISMISSAL AS TO ONE PARTY—EFFECT AS TO OTHER PARTY.

Where defendant railroad company, in performance of a contract to transport a regiment, furnished a car with a defective door, and plaintiff, while lawfully riding in the car, was injured by his foot becoming caught by the door while the car was being transported by a terminal company, which had nothing to do with the inspection or maintenance of the car, a dismissal as to the terminal company did not also require a dismissal as to the railroad company.†

2. CARRIERS (§ 318*)—INJURY TO PASSENGER—DEFECTIVE CAR—EVIDENCE.

Evidence *held* to sustain a verdict in favor of a passenger, riding in a freight car, for alleged injuries suffered by reason of a defect therein.

[Ed. Note.—For other cases, see Carriers, Cent. Dig. §§ 1270, 1307–1314; Dec. Dig. § 318.*]

3. CARRIERS (§ 242*)—TRANSPORTATION OF FREIGHT—CARETAKERS.

Where defendant contracted to transport a regiment, with its horses, equipment, baggage, etc., it would be assumed, in the absence of anything to the contrary, that the commanding officer was authorized to say what men should go in the car with the horses, and hence a civilian driver attached to the regiment, while riding in the car under orders, was not a trespasser.

[Ed. Note.—For other cases, see Carriers, Cent. Dig. § 980; Dec. Dig. § 242.*

Relation of carrier to persons carried under contract with their employers, see note to Chicago & N. W. Ry. Co. v. O'Brien, 67 C. C. A. 427.]

In Error to the District Court of the United States for the Southern District of New York.

This cause comes here on writ of error to review a judgment of the District Court, Southern District of New York, entered on the ver-

---

*For other cases see same topic & § NUMBER in Dec. & Am. Digs. 1907 to date, & Rep'r Indexes

† See note at end of case.

dict of a jury in favor of defendant in error who was plaintiff below. The action was for personal injuries; plaintiff was a civilian driver attached to the Forty-Seventh Regiment, N. Y. N. G., which was being transported from Connecticut to Brooklyn. He traveled in a car operated by the railroad to its rail heads near Oak Point, where the car was placed on a float of the Brooklyn Eastern District Terminal Company, which controlled and operated both float and car until its disembarkation in Brooklyn. The action was brought against the railroad and the terminal company. Complaint was dismissed as to the terminal company and sent to the jury only as to the railroad company's negligence.

J. W. Carpenter, of Brooklyn, N. Y., for plaintiff in error.

J. T. Walker, of New York City, for defendant in error.

Before LACOMBE, COXE, and WARD, Circuit Judges.

LACOMBE, Circuit Judge. [1] The first assignments of error deal with the denial of motion to dismiss as to the railroad company. This is really the only point in the case. The action was brought against both companies. The car, although owned by the New York Central Railroad, was furnished by defendant under its contract to transport the regiment. It was manifestly responsible for any unsafe condition of the car. The complaint charged that the door was in a defective and dangerous condition, liable to cause injury; that, while on the float, it was negligently operated, so that some object struck the door, which was forced in and caught and injured plaintiff's leg and foot. The theory of the complaint was that two things co-operated to cause the accident a defective door and a blow which was due to negligence. On the trial there was not sufficient evidence to show negligence in the operation of the car while on the float, and the complaint was dismissed as to the terminal company. Since it appeared conclusively that the railroad company did not operate the car when on the float, such dismissal practically disposed of any charge of negligence having caused the blow on the door. But that by no means disposed of the other charge of negligence, viz., that the railroad furnished a car having its door in such a defective condition that it became a potent cause of injury when the door was struck, although, if sound, the blow would have caused no trouble. We find no force in the contention that a dismissal as to the one defendant, which had nothing to do with inspection or maintenance of the car, required a dismissal also of the charge against the railroad which furnished the defective car.

[2] It is very difficult to understand from the proof just how the catastrophe happened, or what particular movement of the door it was which brought part of it inside the car. But there was very positive evidence that while plaintiff was seated on the floor of the car, with his feet towards the door, but not touching it, one of his legs was caught under the bottom edge of the door and pinned there until his companions disengaged it. There was also evidence that before the car started its door was in a condition of disrepair which made it swing and sway. Such condition it was sought to remedy by driving

in some nails, an expedient which evidently did not remedy the difficulty. There was sufficient evidence to sustain the jury's verdict. The case was sent to them under a full and careful charge, to which there was substantially no exception.

[3] We find no force in the suggestion that plaintiff was a trespasser. The contract under which the regiment, with its horses, equipment, baggage, etc., was being transported, is not in evidence. In the absence of anything in it to the contrary, it may fairly be assumed that it was for the commanding officer to say what men should go in the car with the horses.

Judgment affirmed.

NOTE.

Judgment against Remaining Party or Parties after Dismissal or Nonsuit as to One or More Coparties.

I. In General.

(Ala.) In case one of two defendants is not served with process, it is not necessary to enter a formal discontinuance as to him. It is sufficient if judgment is entered against the other alone, although the declaration runs against both.—Oliver v. Hutto, 5 Ala. 211.

(Ala.) Under the rule that it is not necessary to enter any order of dismissal as to a party not served, a plaintiff in a suit against two "late partners" may, on a defendant not being served, obtain a judgment against the codefendants served without first discontinuing as to defendant, notwithstanding Code 1896, § 42, providing that, when a suit is instituted against two or more persons, plaintiff may sue out an alias summons, or discontinue as to those not served, and proceed to judgment against those served.—Greer & Walker v. Liipfert-Scales Co., 47 South. 307.

(Ark.) Where judgment is entered against all the defendants, after the action has been discontinued as to one, without any subsequent appearance on his part, it will be reversed as to all.—Inglish v. Watkins, 4 Ark. (4 Pike) 199.

(Ark.) Where one of two defendants in an action of debt has been served with process, and the other has not, it is erroneous to proceed to judgment against one, without a discontinuance as to the other.—Alston v. State Bank, 9 Ark. (4 Eng.) 455.

(Fla.) Under Act 1828 (McClel. Dig. p. 813, § 13), upon the return of the sheriff, on process issued against two or more defendants, that one is served and that the others do not reside in the county or circuit, plaintiff may proceed to judgment against the defendant served, without any formal dismissal or notation of the fact of nonservice as to the others.—Bacon v. Green, 36 Fla. 325, 18 South. 870.

(Ill.) In an action against several, it is error to render judgment against all, where the proof does not show a joint liability, but plaintiff may amend his declaration by dismissing as to the defendants not shown to be jointly liable.—Cairo & St. L. R. Co. v. Easterly, 89 Ill. 156.

(Ill.) Where two defendants, one a resident of the county in which the action is brought and the other a nonresident of such county, are joined, judgment is properly rendered against the nonresident defendant, where such defendant appears and defends the action, regardless of the disposition of the case as to the other defendant.—Lehigh Valley Transp. Co. v. Post Sugar Co., 128 Ill. App. 600, judgment affirmed 81 N. E. 819, 228 Ill. 121.

(Ill.) Where the court in entering judgment treats certain defendants as no longer parties to the cause and enters judgment only against those treated as still parties thereto, the effect is equivalent to a dismissal of the cause as to the parties so treated as no longer in the cause.—West Chicago St. R. Co. v. v. Muttschall, 131 Ill. App. 639.

(Ill.) Where an action against three defendants was, after verdict for plaintiff, dismissed as to two defendants not served, the verdict was valid as against defendant served, and judgment was properly rendered against him. Judgment, Springer v. Siltz, 133 Ill. App. 552, affirmed.—Siltz v. Springer, 85 N. E. 748, 236 Ill. 276.

(Ky.) In a joint action against several defendants, plaintiff cannot, without cause, discontinue his suit as to them all except one, and take judgment against that one.—Trigg v. Christmill, 7 Ky. (4 Bibb) 455.

(Ky.) Where there was a judgment against three persons, and no evidence that process had been served on one of them, it was erroneous to give judgment, without a proper disposition of the case as to him; the words, "Parties appeared," in the record, referring to two only.—Violet v. Waters, 24 Ky. (1 J. J. Marsh.) 303.

(Ky.) Where a sheriff made a return on a summons of "Not found" against one of two defendants dated nine days before the return day, and such defendants before the return day asked the sheriff, who then had the process, to execute it, it was error to enter an abatement as to that defendant and render judgment against the other.—Combs v. Warner, 38 Ky. (8 Dana) 87.

(Ky.) Upon a return of "No inhabitant," or "Not found," as to one or more defendants in a joint action, the plaintiff may proceed to judgment against those on whom process is executed; but the suit must be disposed of by orders on the record as to all the defendants. To enter judgment against those who have been served with process, without any order of abatement as to those returned "Not found," or "No inhabitant," is irregular and erroneous. —Applegate v. Jacoby, 39 Ky. (9 Dana) 206.

(Ky.) Where an action is brought against several defendants, one of whom is served with summons in another county than that in which the suit is brought, no judgment can be rendered against him, if the action is dismissed or discontinued as to those served in the county where it is brought, or judgment is rendered in their favor.—Duckworth v. Lee, 73 Ky. (10 Bush) 51.

(Mich.) A rule of court permitting a plaintiff to discontinue as to one or more defendants means to allow a recovery against the rest, where the action might properly have been confined to them in the first place, but does not transform a purely joint obligation into a several.—Anderson v. Robinson, 38 Mich. 407.

(Miss.) Where one of several defendants is not served with process, judgment against the others, without a dismissal or discontinuance as to the one not served, is erroneous.—Hughes v. Evans, 12 Miss. (4 Smedes & M.) 737; Dennison v. Lewis, 7 Miss. (6 How.) 517.

(Miss.) Where only one of two joint executors, sued in an action at law, is served with process, judgment may be rendered against him, without a formal dismissal as to the other.—Hunt v. Anderson, 33 Miss. 559.

(Miss.) Where a suit is commenced in the circuit court for a certain county against several defendants, none of whom are found in the county where the action is commenced, but a duplicate writ issued to another county is returned properly served, and the action is dismissed as to the other defendants, the court has no jurisdiction to give judgment against the defendant so served. —Woolley v. Bowie, 41 Miss. 553.

(Mo.) Where, after judgment against several defendants, it is discovered that judgment as to one of them is erroneous, it may be dismissed as to such defendant, and judgment entered anew on the verdict against the remaining defendants.—Jackson v. Bowles, 67 Mo. 609.

(Mo.) Rev. St. 1899, § 545 (Ann. St. 1906, p. 584), provides that every person who shall have a cause of action against several may bring suit thereon jointly against all or as many of the persons liable as he may think proper. *Held* that, if the proof justifies the court in sustaining a demurrer as to some of the defendants, their dismissal does not affect plaintiff's right to recover against the others.—Moudy v. St. Louis Dressed Beef & Provision Co., 130 S. W. 476.

(Mont.) Under the direct provisions of Code Civ. Proc. 1895, § 1002, in an action against several defendants the court may in its discretion render judgment against one or more of them, leaving the action to proceed against the

others where the defendants are severally liable.—State v. District Court of Ninth Judicial Dist., 96 Pac. 337.

(Mont.) Under Rev. Codes, §§ 6711, 6712, providing that judgment may be given against one or more of the several defendants, and that the court may, when justice requires, determine the ultimate rights of the parties, and in an action against several defendants may render judgment against one or more of them, leaving the action to proceed against the others, whenever a several judgment is proper, judgment may be rendered against one of the several defendants in a suit to foreclose a lien on lumber, though the evidence shows that the others were not liable.—Logan v. Billings & N. R. Co., 107 Pac. 415, 40 Mont. 467.

(N. H.) Where a writ is amended by striking out the name of a defendant under the statute, the plaintiff may recover against the others upon the cause of action originally declared upon.—Flanders v. White Mountains Bank, 43 N. H. 383.

(N. Y.) Where the plaintiff discontinues or enters a nol. pros. against one, he cannot have judgment against the other or others by verdict.—Hall v. Rochester, 3 Cow. 374.

(N. Y.) Where an action was discontinued by consent as to a defendant, no judgment could run either for or against him, and where he desired costs against plaintiff, he should enter an order of discontinuance, with a provision for costs.—Eisberg v. Cornell, 138 N. Y. Supp. 661, 154 App. Div. 885.

(Pa.) Where there are several defendants, the jury's failure to find as to all may be cured by entering a nol. pros. in the supreme court or in the common pleas; the record being remanded for such purpose.—Ward v. Taylor, 1 Pa. (1 Barr) 238.

(S. C.) Where a cause of action is several as well as joint, the plaintiff may discontinue as to the rest, and declare against one, by leave of court, but not otherwise.—Fitch v. Heise, Cheves, 185.

(Tex.) An error is not discontinuing as to a defendant not served with process, in a suit against two, will not affect the validity of the judgment rendered in favor of the defendant who was served and defended against the suit.—Reynolds v. Adams, 3 Tex. 167.

(Wis.) It is error to render judgment against one of two defendants, without a discontinuance or finding as to the other, in an action where issue is joined by the plea of both.—Hibbard v. Bell, 3 Chand. 206, 3 Pin. 190.

(Wis.) Under Rev. St. c. 132, § 26, providing that judgment may be given for or against one or more of several defendants, the county court may order a discontinuance as to some of several defendants, and a judgment against the others in order to cure a misjoinder.—Thompson v. Reinhard, 11 Wis. 293.

II. Actions Ex Contractu.

(Ala.) In an action against several on a joint contract, the plaintiff may confess the matter pleaded separately by one in bar as to him, and enter a nol. pros. as to him, and proceed to judgment against the others.—Hallett v. Allaire, Minor, 360.

(Ala.) Where the writ in an action against several indorsers of a note is served on one only, it is competent for the plaintiff to proceed against him and discontinue as to the others.—Smith v. Robinson, 11 Ala. 270.

(Ark.) In an action on a joint contract, where one of the defendants successfully pleaded non est factum, he was entitled to judgment of discharge and costs, and the plaintiff could not take him from the record by a nolle prosequi.—Ferguson v. State Bank, 11 Ark. (6 Eng.) 512.

(Idaho) Plaintiff commenced suit to foreclose a mortgage, making the mortgagors and two subsequent purchasers parties. The last two parties were in default. The mortgagors answered, denying the execution of the mortgage, and asking affirmative relief. The proofs being in, plaintiff moved to dismiss as to the mortgagors, waiving any deficiency judgment, which motion was granted, and judgment of foreclosure rendered. *Held*, that the action of the court was error.—Northwestern & Pacific Hypotheek Bank v. Rauch, 51 Pac. 764, 5 Idaho, 752.

(Ill.) Where plaintiff sued several defendants in assumpsit, and alleged a joint liability of all, and at the trial moved for and obtained leave to dismiss as against one of the defendants, he could not recover against the others, since, where an action is brought on a contract against two or more, judgment must be against all who are served or appear, or against none.—Smith v. Condon, 90 Ill. App. 314.

(Ill.) The rule that in a joint action ex contractu a dismissal as to one defendant affects a discontinuance of the entire action does not apply, where the party against whom dismissal was had was not a party to the contract. —Carnegie v. Dawney, 178 Ill. App. 413.

(Ind.) In an action on a joint contract, where all of the alleged contractors were served with process, the dismissal of the action as to one of them afforded no cause for setting aside a judgment against the others.—Lee v. Basey, 85 Ind. 543.

(Iowa) In an action on a joint and several note, where several answers are filed, the plaintiff may discontinue as to part of the defendants and proceed against the others.—Young v. Brown, 10 Iowa, 537.

(Ky.) On a joint bond, the return of "No inhabitant" as to one obligor justifies an abatement as to him and judgment as to the others.—Sebree v. Clay, 10 Ky. (3 A. K. Marsh.) 552.

(Ky.) On a note signed by H. B., three persons, H. B., A. B., and C. B., were sued by petition and summons. Process was served on the two first named; and, without any abatement as to the last, judgment was rendered against all three. *Held* erroneous because there was no service of process on C. B., and because judgment cannot be taken against the other defendants without disposing of the case as to those on whom process was not served.—Bowmans v. Mize, 42 Ky. (3 B. Mon.) 320.

(Mich.) A discontinuance as to a married woman who was one of four makers in a joint note in an action on the note will not prevent the rendition of a valid judgment against the remaining defendants.—Atkinson v. Weidner, 47 N. W. 317, 83 Mich. 412.

(Mich.) Where plaintiff pleaded a joint contract executed by two defendants, but the proof showed that one of the defendants did not sign the contract, but that the other executed the identical contract sued on, plaintiff was entitled to recover against it, under circuit court rule 27, subd. "b," providing that one who has alleged a joint contract between two or more may discontinue against any of them, and amend his declaration, and proceed against the other defendants, etc.—Root & McBride Co. v. Walton Salt Ass'n, 103 N. W. 844, 140 Mich. 441.

(Miss.) In an action against several on a joint and several contract, a nolle prosequi may be entered against one, and the plaintiff proceed to judgment against the others.—Peyton v. Scott, 3 Miss. (2 How.) 870.

(Miss.) In an action against all the joint and several makers of a note, it is regular to discontinue as to part and take judgment against the residue, although process was served upon all.—Nevitt v. Natchez Steam Packet Co., 6 Miss. (5 How.) 196.

(Miss.) Under the statute requiring that the makers and indorsers of negotiable paper shall be sued jointly, the plaintiff, after service of process, cannot discontinue as to the makers, and take judgment against the indorsers. —Wilkinson v. Tiffany, 6 Miss. (5 How.) 411; Boush v. Smith, 10 Miss. (2 Smedes & M.) 512; Brunson v. Lea, 13 Miss. (5 Smedes & M.) 149.

(Miss.) In an action against several makers of a note, it is competent for the plaintiff to discontinue as to one not served with process, and take judgment against the residue.—Harrison v. Agricultural Bank, 10 Miss. (2 Smedes & M.) 307.

(Mo.) Where the indorser of a note, residing out of the county in which suit was brought, was joined as defendant with other parties to the note, who were resident, it was *held* that the court did not lose jurisdiction over the nonresident defendant by the dismissal of the suit as to all the resident defendants.—January v. Rice, 33 Mo. 409.

(N. Y.) Where the defendants, in a case in contract, are severally liable, the superior court of New York City has jurisdiction over such of them as are

served with summons within the city, and the plaintiff may, at any time before trial, discontinue as to the rest, and proceed to trial and judgment against those so served.—Bates v. Reynolds, 20 N. Y. Super. Ct. (7 Bosw.) 685.

(Pa.) Where one of two obligees has been discharged as a bankrupt, the plaintiff may enter a nol. pros. as to him, and proceed to trial against the other.—Commonwealth v. Nesbitt, 2 Pa. (2 Barr) 16.

(Pa.) An action of debt was brought against three persons. One pleaded coverture, and an award was found against the other two, and an appeal taken by one. The plaintiff suffered a nonsuit as to the married woman. *Held*, that he might recover in the same action against the other.—Weist v. Jacoby, 62 Pa. (12 P. F. Smith) 110.

(S. C.) In an action on a contract, if it appears that the liability is joint and several, plaintiff, failing to prove the case against all the joint makers, may discontinue as to those against whom there is no proof, and take judgment against the one proved to be liable on the contract.—Freeman v. Clark, 3 Strob. (S. C.) 281.

(Tex.) Rev. Civ. St. 1911, art. 1897, is mandatory; and, in the absence of a pleading alleging the facts required by the statute, a judgment against a guarantor, after the suit had been dismissed as to the principal obligor, was erroneous.—First Nat. Bank v. Thurmond, 159 S. W. 164.

(Wash.) In an action on an insurance policy, the complaint alleged that plaintiffs had each an interest in the insured property, and that the policy was intended to be for their mutual benefit, but that it was issued in the name of plaintiff N., and defendant refused to pay the loss because plaintiff C. was not named in it. The prayer was to reform the policy so as to include C., and for a money judgment. *Held*, that a finding that there was no mistake, and a dismissal of the action as to C., did not require a dismissal as to N. also, since reformation was not the only relief sought.—Cushing v. Williamsburg City Fire Ins. Co., 4 Wash. St. 538, 30 Pac. 736; Same v. American Ins. Co., Id.

III. Actions Ex Delicto.

In actions of tort against several defendants, where several can be jointly guilty and liable, the plaintiff may discontinue as to part and proceed against the others. A verdict may be in favor of some and against others, and judgment may be entered against those who are found guilty.

—(N. Y.) Lockwood v. Bull, 1 Cow. 322, 13 Am. Dec. 539;
(S. C.) Chanet v. Parker, 1 Mill, Const. 333;
(Vt.) Wright v. Cooper, 1 Tyler, 425.

(Colo.) Where, pending a motion for a new trial, and after verdict against two joint tort-feasors, the action is dismissed as to one of them with the consent of the other, it is not error to enter judgment on the verdict after denial of the motion, against the remaining defendant.—Dewoody v. Guertin, 58 Pac. 794, 13 Colo. App. 517.

(Colo.) An order of dismissal of a joint defendant in an action for conversion does not affect the liability of his codefendant.—Carper v. Risdon, 76 Pac. 744, 19 Colo. App. 530.

(Ill.) Where a verdict is returned against several defendants in an action of tort, and judgment is rendered against them, it must be for the full amount against all; but the plaintiff may dismiss as to part and take judgment against the remaining defendants on the verdict of guilty against each.—Illinois Cent. R. Co. v. Foulks, 92 Ill. App. 391, judgment affirmed 60 N. E. 890, 191 Ill. 57.

(Ill.) A declaration charged two defendants with joint liability, and after the proofs were in, and arguments heard, the suit was dismissed as to one defendant against the objection of the other defendant. *Held*, that as the plaintiff, by reason of the objection made by the remaining defendant, was apprised of the defective condition of the declaration, he should have amended it, and, having failed to do so, it was error for the court to enter judgment against the remaining defendant alone.—Harris v. J. F. Humphrey & Co., 103 Ill. App. 45.

(Ky.) Where a joint action of trespass is brought against several, but sufficient service is not made on all of them, the plaintiff cannot, by dismissing his suit against those on whom service was insufficient, proceed to trial against the others at the first term.—Prince v. Flynn, 12 Ky. (2 Litt.) 240.

(Ky.) A verdict having been rendered against four defendants, in an action of libel, a motion for new trial was made on various grounds, one of which was that against R., one of the defendants, there was no evidence. The court, being of this opinion, upon trial of the motion, put the plaintiff upon terms that she should dismiss her suit against R., which she accepted and entered a nol. pros. against him; and the motion as to the other defendants was overruled, and judgment rendered against them for the amount of the verdict. *Held*, this was no error.—Shelton v. Harlow, 54 Ky. (15 B. Mon.) 547.

(Mass.) Whether a discontinuance as to one of two defendants charged with unlawful conspiracy is a bar to recovery against the other, quære.—Evans v. O'Connor, 174 Mass. 287, 54 N. E. 557, 75 Am. St. Rep. 316.

(Pa.) After defendants in trespass for mesne profits have pleaded jointly, and a separate verdict is found, judgment may be entered against some, and a nolle prosequi as to the others.—Chambers v. Lapsley, 7 Pa. (7 Barr) 24.

(Pa.) In an action against two defendants as joint tort-feasors, a nonsuit cannot be entered as to one, and a judgment be rendered against the other.—Hart v. Allegheny County Light Co., 50 Atl. 1010, 201 Pa. 234.

(Pa.) Where an adult and a minor are joined as defendants and joint tort-feasors in an action of trespass q. c. f., and it is not discovered until after the verdict that one of the parties is a minor, the court may enter a nolle prosequi as to the minor, and permit the verdict and judgment to stand against the other defendant.—Crane v. Lynch, 27 Pa. Super. Ct. 565.

(Tex.) Where two carriers were jointly sued for damages to cattle shipped over both roads, a judgment against one was properly entered under the statute relating to discontinuances in actions based on joint liability.—Gulf, C. & S. F. Ry. Co. v. Lee, 65 S. W. 54.

(Vt.) Where, in an action for trespasses, plaintiff is not negligent in not sooner finding out that one of the defendants is not liable for all of them, he may enter a nol. pros. or take a nonsuit as to such defendant, and have judgment against the others, where otherwise he would lose a substantial part of his damages.—Davenport v. Newton, 42 Atl. 1087, 71 Vt. 11.

(Wash.) Where a verdict was rendered against two defendants in an action ex delicto, the setting aside of the verdict and dismissal of the action by the court as to one defendant and rendition of judgment against the other was not error, each defendant being severally liable for the whole damage.—Birkel v. Chandler, 66 Pac. 406, 26 Wash. 241.

(W. Va.) In an action on the case for malicious prosecution, in the nature of a conspiracy, a judgment may be had against one defendant and the action discontinued as to the others.—Porter v. Mack, 40 S. E. 459, 50 W. Va. 581.

(216 Fed. 503)

REBILLARD v. MINNEAPOLIS, ST. P. & S. S. M. RY. CO.

(Circuit Court of Appeals, Eighth Circuit. July 27, 1914.)

No. 4173.

1. APPEAL AND ERROR (§ 695*)—REVIEW OF EVIDENCE—PARTIAL RECORD.
On a question of fact an appellate court cannot have the entire record before it, where the trial court and jury made an inspection of the premises where an accident occurred.

[Ed. Note.—For other cases, see Appeal and Error, Cent. Dig. §§ 2911–2914; Dec. Dig. § 695.*]

2. NEGLIGENCE (§ 93*)—IMPUTED NEGLIGENCE—INJURY TO PASSENGER IN AUTOMOBILE.
Plaintiff was riding with others as a guest in an automobile at night. The lights gave out, and they stopped at a town, but could procure no light, except an oil lamp, which was very dim. After traveling several miles, while they were on a trail not used or treated as a public road, and with which none of those in the car was acquainted, the machine went over an embankment into a cut made by defendant railroad company, and plaintiff was injured. The place was within the limits of a city, but in a part which had not been platted, nor streets or alleys dedicated. *Held* that, aside from the question of defendant's negligence, plaintiff was chargeable with contributory negligence and could not recover.

[Ed. Note.—For other cases, see Negligence, Cent. Dig. §§ 147–150; Dec. Dig. § 93.*]

3. NEGLIGENCE (§ 93*)—NEGLIGENCE OF DRIVER OF VEHICLE IMPUTABLE TO PASSENGER.
The rule that the negligence of the driver of a conveyance will not be imputed to a passenger, whether the conveyance is a public one or the passenger is the guest of the driver of a vehicle, does not apply where the passenger has full knowledge of the danger and voluntarily incurs the risk.

[Ed. Note.—For other cases, see Negligence, Cent. Dig. §§ 147–150; Dec. Dig. § 93.*]

In Error to the District Court of the United States for the District of North Dakota; Charles F. Amidon, Judge.

Action at law by Charles Rebillard against the Minneapolis, St. Paul & Sault Ste. Marie Railway Company. Judgment for defendant, and plaintiff brings error. Affirmed.

C. J. Murphy, of Grand Forks, N. D. (Murphy & Toner, of Grand Forks, N. D., and William M. Anderson, of Devil's Lake, N. D., on the brief), for plaintiff in error.

Fred J. Traynor, of Devil's Lake, N. D. (Flynn & Traynor and P. J. McClory, all of Devil's Lake, N. D., and John L. Erdall and A. H. Bright, both of Minneapolis, Minn., on the brief), for defendant in error.

Before SANBORN, Circuit Judge, and TRIEBER and REED, District Judges.

*For other cases see same topic & § NUMBER in Dec. & Am. Digs. 1907 to date, & Rep'r Indexes

TRIEBER, District Judge. This is an action for personal injuries sustained by the plaintiff below, who is the plaintiff in error, and will be referred to herein as the plaintiff, caused by an automobile, in which he was riding as a guest with a friend, running over an embankment into a deep cut made by the defendant in the construction of its road; and which was unguarded.

The allegations in the complaint are that the defendant constructed a line of railway through the city of Devil's Lake, N. D., which intersected a public highway located west of said city; that in building the railroad a cut 19 feet in depth at the point of intersection with the highway was made; that the cut was not bridged over, nor guarded in any way, so as to warn travelers upon the highway of the dangerous situation there existing; that on April 26, 1913, at 11:45 p. m. while plaintiff was riding as a guest in the rear seat of an automobile driven by the owner of the car over the said highway, the car was driven over the embankment into the cut, thereby injuring plaintiff.

The answer is a general denial, and also pleads contributory negligence on the part of the plaintiff. At the conclusion of the evidence the court gave a peremptory instruction in favor of the defendant.

The evidence introduced on the part of the plaintiff tended to show that one Doyon, who was the owner of an automobile, had invited the plaintiff to take a trip in his car, plaintiff bing associated with him in the mercantile business at Doyon, N. D.; that at Church's Ferry they picked up two additional guests, Mr. McLean, who was sheriff of that county, and Mr. Chambers, a newspaper man and postmaster at Church's Ferry. They left Church's Ferry about 8 o'clock shortly before dark; the car was provided with a prest-o-lite tank for lighting purposes; when about 8 or 9 miles from Church's Ferry the gas gave out; there was an oil lamp on the dash of the car, but neither wick nor oil in it; they proceeded in the dark about two miles to Grand Harbor, where they tried to get a prest-o-lite gas tank, or an ordinary lantern, but failed; they procured some kerosene and a wick there, but the latter was too large for the lamp on the car, and it was trimmed down so as to make it do, but the light afforded by the lamp was very dim; they then proceeded on their journey to Devil's Lake, which was about 6 miles. Mr. McLean was the only person who was at all familiar with the roads in that section, but he had not been over this road for some time, and not since the defendant built its line and made the cut, several months before the accident occurred. They traveled over what seemed to be a prairie trail on the section lines, grown over with grass and weeds, and which had never been treated as a public road, nor as a street or alley of the city of Devil's Lake, within whose corporate limits it was, and where the accident occurred, and was but little traveled. Mr. McLean was standing on the running board of the car for the purpose of keeping a lookout, while the plaintiff and Mr. Chambers were sitting on the back seat of the car. Shortly before reaching the place of the accident they got off the trail, which was very indistinct. They

then tried to get back on the trail, but a large rock was in the way, which caused them to turn toward the section line, and in attempting to get back to the trail the car went over the embankment. The cut does not cross the trail at right angles, but a little "biased." It is undisputed that, had the car been supplied with proper lights, the party would not have taken this trail, but would have used the public road, which would have enabled them to avoid this cut, or, if on the trail, the cut could have been seen in time to avoid the accident.

Section 2171, North Dakota Rev. Code, prescribes:

"Every automobile or motorcycle shall also be provided with lights, the automobile to carry not less than two lights in front of such machine, one of which to be on either side."

The evidence is undisputed that the trail was not treated or used as a public road, nor, being within the limits of a city, as a street or alley. It was a part of the city which had never been platted, nor any streets or alleys dedicated. It is claimed on behalf of the plaintiff that the trail, being on the section lines, was under the provisions of section 2477, R. S. U. S. (U. S. Comp. St. 1901, p. 1567), and by reason of the acceptance of the grant of this strip as a public road by the territory of Dakota in 1877, a public road, and therefore it was the duty of the railway company to guard the cut at the intersection of this road. Several decisions of the Supreme Courts of South and North Dakota are cited to that point, but an examination of them shows that they are not in point, as all they decided was that the owner of the lands bordering on section lines takes them subject to the easement of the county and state to use them as public roads or streets, whenever they see proper to do so, a privilege which had never been exercised by either the city, county, or state in this case.

But it is claimed on behalf of the plaintiff, quoting from the brief, that:

"There was at least a road established by user which the defendant had no right to obstruct. This trail had been used for many years, and the defendant, in utter disregard of the safety of travelers excavated a cut 30 feet wide and about 15 feet deep through the road without so much as putting up a warning signal. Even if the users of the road were mere licensees, the defendant owed them the duty of warning them by building a barrier, placing signal lights or in some other manner. The conditions were such as to advise defendant of the long use of this road for highway purposes, and it was bound to know that travelers might continue to use this road, and that it might, under conditions such as existed on the night in question, become a veritable deathtrap. This was the defendant's duty under the general law as to licensees, and neglect of that duty would render it liable to any person injured without contributing fault."

[1] The evidence, as to whether the trail indicated that it was used to any appreciable extent as a public road, is conflicting, but the record shows that during the trial the jury and trial judge, by consent of all parties, made an ocular inspection of the place, where the accident occurred. What that inspection conveyed to the minds of the court we cannot know from the record; in such case the appellate court cannot have the entire record before it. Choctaw, etc.

R. R. Co. v. Holloway, 114 Fed. 458, 52 C. C. A. 260, affirmed 191 U. S. 334, 24 Sup. Ct. 102, 48 L. Ed. 207.

[2] Assuming that the above statement of the law made by counsel for plaintiff to be correct, the question arises whether the accident which caused plaintiff's injuries occured "without contributing fault on his part." It is undisputed that the car on that occasion was not provided with lights as required by the laws of North Dakota, and even in the absence of such a statute no reasonably prudent person would, on a dark night, on a road with which he was unfamiliar, travel in a motor car without sufficient lights to enable him to see whether there were any dangerous places along the road of travel, especially when going to a city known to him to have several railroads whose tracks would have to be crossed. All the evidence tends to show that had the car been supplied with proper lights this road would not have been used by the party, and if used the cut would have been seen in time to have avoided it. This clearly was such negligence as to prevent a recovery on the part of those in charge of the car.

[3] But it is claimed, and that is the main ground upon which a reversal of this cause is asked, that as the plaintiff was merely a guest of the owner and driver of the car, and exercised no control over the driver, the driver's negligence is not attributable to him.

In Little v. Hacket, 116 U. S. 366, 6 Sup. Ct. 391, 29 L. Ed. 652, which is the leading American case on this subject, and which has been followed by the American courts generally, the rule was established that the contributory negligence of the driver of a public conveyance would not be imputed to a passenger. And this court in Union Pacific Ry. Co. v. Lapsley, 51 Fed. 174, 2 C. C. A. 149, 16 L. R. A. 800, and City of Winona v. Botzet, 169 Fed. 321, 94 C. C. A. 563, 23 L. R. A. (N. S.) 204, has extended this rule to a person who accepts a gratuitous invitation of the owner and driver of a vehicle to ride with him, even if it is not a public conveyance. But an examination of the many cases on that question shows that the writers of the opinions are careful to except a passenger or guest who with knowledge of the danger remains in such dangerous position. Dyer v. Erie Ry. Co., 71 N. Y. 228; Brickell v. N. Y. C. & H. R. R. Co., 120 N. Y. 290, 294, 24 N. E. 449, 17 Am. St. Rep. 648; Transfer Co. v. Kelley, 36 Ohio, 86, 91, 38 Am. Rep. 558; Wabash, etc., Ry. Co. v. Shacket, 105 Ill. 364, 44 Am. Rep. 791; Davis v. C., R. I. & P. Ry. Co., 159 Fed. 10, 19, 88 C. C. A. 488, 497, 16 L. R. A. (N. S.) 424; Brommer v. Pennsylvania Ry. Co., 179 Fed. 577, 581, 103 C. C. A. 135, 29 L. R. A. (N. S.) 924; Dean v. Pennsylvania R. R. Co., 129 Pa. 524, 18 Atl. 718, 6 L. R. A. 143, 15 Am. St. Rep. 733.

In Davis v. C., R. I. & P. Ry. Co., supra, this court quoted with approval the following extract from Brickell v. N. Y. C. & H. R. R. Co., supra:

"The rule that the driver's negligence may not be imputed to the plaintiff should have no application to this case. Such rule is only applicable to cases where the relation of master and servant or principal and agent does not exist,

or where the passenger is seated away from the driver by an enclosure, and is without opportunity to discover danger and to inform the driver of it. It is no less the duty of the passenger, where he has the opportunity to do so, than of the driver to learn of danger, and avoid it if practicable."

The same rule is laid down in Shultz v. Old Colony Street Ry. Co., 193 Mass. 323, 79 N. E. 873, 8 L. R. A. (N. S.) 597, 118 Am. St. Rep. 502, 9 Ann. Cas. 402; Partridge v. Boston & M. Ry. Co., 184 Fed. 219, 107 C. C. A. 49.

The plaintiff, as a reasonably prudent person, must have known of the danger incident to riding in a motor car on a dark night, without lights, over roads with which neither the driver of the car, nor any of the persons with him in the car, were familiar. When with full knowledge of that fact the plaintiff remained in the car he was as guilty of negligence as the driver himself. As stated by Judge Philips in the Davis Case:

"The law of common sense applied to such a situation is that the movement and control of the vehicle is as much under the direction and control of one as of the other."

The action of the court in directing a verdict in favor of the defendant was right, and the judgment is accordingly affirmed.

(216 Fed. 507)

NATIONAL TUBE CO. v. MARK et al.

(Circuit Court of Appeals, Sixth Circuit. July 25, 1914.)

No. 2417.

1. PATENTS (§ 328*)—VALIDITY AND INFRINGEMENT—MECHANISM FOR RIFLING PIPES OR TUBES.

The Fell patent, No. 888,984, for apparatus for rifling pipes or tubes was not anticipated. discloses patentable invention, making a distinct and valuable advance in the art, and its claims are entitled to a fairly broad construction; also *held* infringed as to claims 1, 2 and 3.

2. PATENTS (§ 165*) — CONSTRUCTION OF CLAIMS — "SUBSTANTIALLY AS DESCRIBED."

At least in all recent patents, granted since the rule of the Patent Office established by the decision of the Commissioner in 1902 in Ex parte Shepler, 102 O. G. 468, has been in force, and save in exceptional instances, the presence or absence of the phrase "substantially as described" in a claim is of no interpretative importance, words of such import being implied if not expressed. Such words, if present, do not limit the patentee to the exact mechanism described, nor deprive him of the benefit of the rule of equivalents to the same extent as if they were absent.

[Ed. Note.—For other cases, see Patents, Cent. Dig. § 241; Dec. Dig. § 165.*

For other definitions, see Words and Phrases, vol. 7, pp. 6741, 6742.]

---

*For other cases see same topic & § NUMBER in Dec. & Am. Digs. 1907 to date, & Rep'r Indexes

3. PATENTS (§ 157*)—CONSTRUCTION—RULES OF PATENT OFFICE.

When the Patent Office has a settled rule of construction under which a certain phrase in a patent grant has a fixed meaning, acquiesced in by the patentee, the courts cannot afterward rightfully say that the phrase means something more or something less.

[Ed. Note.—For other cases, see Patents, Cent. Dig. §§ 229–232; Dec. Dig. § 157.*.

Conclusiveness and effect of decisions of patent office in proceedings on applications, see note to Novelty Glass Mfg. Co. v. Brookfield, 95 C. C. A. 530.]

4. PATENTS (§ 165*)—CONSTRUCTION OF CLAIMS.

Where a patent contains both a broad and a narrow claim and suit is brought on the broad claim, the court cannot construe into it a limitation not therein expressed, but which is expressed in the narrower claim, and by which alone one is distinguished from the other.

[Ed. Note.—For other cases, see Patents, Cent. Dig. § 241; Dec. Dig. § 165.*]

5. PATENTS (§ 168*)—CONSTRUCTION—ESTOPPEL BY PROCEEDINGS IN PATENT OFFICE.

It is not necessarily important that when the examiner rejects a claim in an application for a patent on a reference to an earlier patent, the applicant thereupon amends the claim, but it is of importance and creates an estoppel against the patentee only when it additionally appears that the effect of the amendment was to narrow the claim.

[Ed. Note.—For other cases, see Patents, Cent. Dig. §§ 243½, 244; Dec. Dig. § 168.*]

Appeal from the District Court of the United States for the Southern District of Ohio; John E. Sater, Judge.

Suit in equity by National Tube Company against Cyrus Mark, Anson Mark, and Clayton Mark, partners, as the Mark Manufacturing Company. Decree for defendants, and complainant appeals. Reversed.

D. Anthony Usina, of New York City and Charles C. Linthicum, of Chicago, Ill., for appellant.

Charles Neave, of New York City and James K. Bakewell, of Pittsburg, Pa., for appellees.

Before KNAPPEN and DENISON, Circuit Judges, and COCHRAN, District Judge.

DENISON, Circuit Judge. [1] This is the usual patent infringement suit, brought by appellant, as plaintiff in the court below, and based upon patent No. 888,984, issued May 26, 1908, to Charles Fell for "apparatus for rifling pipes or tubes." Pipes used for the transmission of liquids had always been constructed with as smooth an inner surface as possible, in order to minimize the friction. It developed that in the long-distance carrying of the heavy viscous oils of California, the adhesion of the oil to the inner surface of the pipe was a serious obstacle. In 1904 Isaacs and Speed made an ingenious discovery. They found that a film of water interposed between the pipe and the oil would remove the trouble, that if a little water was put in with the

*For other cases see same topic & § NUMBER in Dec. & Am. Digs. 1907 to date, & Rep'r Indexes

oil and the whole liquid given a rotary motion, the resulting centrifugal force would throw the water out against the pipe and create the desired water film, and that sufficient rotary motion could be induced by rifling the pipe, so that when the contents were pumped through, giving primarily a longitudinal motion, there would be induced a secondary spiral motion. They utilized their discovery by a method patent, not now involved, and by an apparatus or device for rifling pipe. This was designed for use in the field, after the pipe was manufactured in the ordinary way, and it consisted of a rigid framework encircling the pipe and carrying four rollers or small wheels which projected inwardly radially to the pipe, and the innermost points of which were in a circle considerably smaller than the outer periphery of the pipe. It necessarily followed that as the pipe was passed through, four corresponding indentations would be made, resulting in ribs upon the inside of the pipe. These indenting wheels were so hung in the surrounding frame that their axes were not parallel to the corresponding diameter of the pipe, but were at an angle of, say, 20 degrees therefrom. It followed that the pipe, as it passed through lengthwise, would slowly rotate, and that the resulting ribs, grooves, or depressions on the inside of the pipe would be helical instead of longitudinal. This invention received distinct commercial approval, but the difficulty and expense of handling pipe in this way were considerable, and application was made to plaintiff, a large manufacturer, to produce and sell pipe in that form at its factory. The natural query was whether pipe could be put into that shape by or in connection with the original drawing and rolling process, and while it was hot and comparatively plastic; and, if so, how that could be done. These questions were submitted to Fell, plaintiff's superintendent, and the patent in suit is his answer.

Fell built his invention upon a device very common in the rolling mill art, a pair of skewed rolls. These consist of an upper and a lower horizontal shaft, each carrying a roll with such concavity in its surface that the pipe may travel between the two, while moving longitudinally upon a line at right angles to a vertical plane halfway between the vertical planes of the two roll shafts; in other words, the upper and lower roll shafts, instead of being at right angles to the travel of the pipe, make complementary angles thereto of, e. g., 70° and 110°, the upper roll shaft having its left-hand end moved 20° forward, and the lower one having its corresponding end moved 20° backward from the right-angled position. Obviously, if the concavity in each roll was upon the arc of a circle, this nonparallelism of the upper and lower roll shafts would so distort the opening that a circular pipe could not pass through, and in order to make this opening or "pass" circular, when projected upon a plane at right angles to the pipe axis, and so suitable for the passage of circular pipe, it is necessary to make each concavity partially elliptical. Such "skewed rolls" operate at the same time to forward and to rotate the pipe, and were in common use, particularly for straightening purposes. It occurred to Fell that by putting circumferential beads or ribs upon the concave faces of these rolls he could get the desired result. Experiment demonstrated that

this was so. The difference between what Isaacs and Speed had done and what Fell did is made clear by the following sketches:

(Fig. 1, Isaacs & Speed.) (Fig. 3, Fell.)

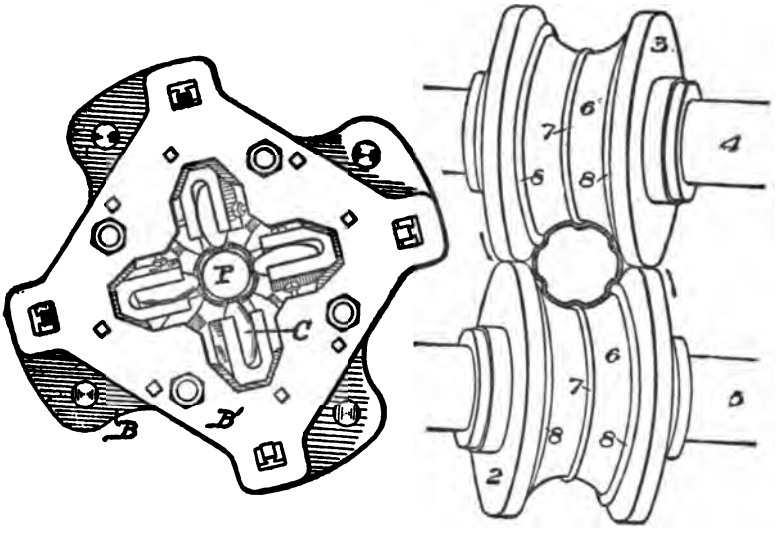

Fell's patent has 14 claims; the bill alleged infringement of all. In the court below plaintiff relied upon nearly all, but in this court it practically confines itself to the first three; and we shall find it necessary to refer to the others only for the sake of applying the differentiation test, in order to determine the meaning of the first three. They are as follows:

"1. In apparatus for rifling pipes or tubes, a pair of skewed rolls formed with circumferential grooves or passes for the pipes or tubes having circumferentially extending rifling beads or ribs, substantially as described.

"2. In apparatus for rifling pipes or tubes, a pair of skewed rolls formed with circumferential grooves or passes for the pipes or tubes having circumferentially extending rifling beads or ribs, and means for positively rotating both of the rolls, substantially as described.

"3. In apparatus for rifling pipes or tubes, a pair of rolls having each a groove or pass for the pipes or tubes with circumferentially extending rifling beads or ribs, the two rolls having their axes crossing each other, and means for positively driving the said rolls, substantially as described."

We see no substantial distinction between these claims. The element added by the second claim, "means for positively rotating both of the rolls," is the statement of an element which, in some form, must be present to make the device independently operative; and the third claim merely uses different terms of description for the same rolls, so we may confine ourselves to the first claim.

The novelty of the broad result which Fell accomplished is not questioned; no one had ever before rifled pipe with a pair of skewed rolls carrying circumferential beads; upon this branch of the case, the only question is whether his solution required invention as distinguished from expert skill. There were in existence two classes of

machines, more or less analogous. One was for corrugating hollow pipe; the other was for twisting solid bars. The first class is typified by Fife, No. 426,439, April 29, 1890. This consisted of two indenting rollers, upper and lower, upon skewed axes so that, as the tube was fed between them, they produced a helical indentation. The axes of the rolls were almost parallel with the axis of the pipe, whereby it resulted that the helix had a very low pitch, and the product was what would naturally be called a corrugated tube; but if there is any distinction between corrugating and rifling due to the pitch of the groove, Isaacs and Speed had bridged the gap by applying the same idea to rifling, except that they used four indenting rolls, and thus provided a pass within the circle struck through these four points, instead of through merely the two opposite contact points of Fife. The other class of devices was used for making twist drills, and is best typified by Denk, No. 761,880, June 7, 1904. He uses skewed rolls, each having one circumferential, large, high rib. The round bar to be twisted was first provided with two oppositely disposed large longitudinal grooves of about the same cross-section shape as the cross section of the circumferential rib on the rolls, and these grooves were made very deep, so that the two left only a comparatively thin web of the bar between them. As the rod is advanced through the skewed rolls, with the upper and lower ribs engaging the respective grooves, and as the rear end of the rod is gripped fast against rotation, it necessarily twists on this central web, and the result is a twist drill.

We are satisfied that Fell made a distinct and valuable advance, and one beyond the limits of mechanical skill, and that his first claim is valid. No one of the pipe corrugating devices had an indenting bead upon a roll, which roll conveyed a double motion to the pipe. In all these corrugating devices the parts which corresponded to, and were perhaps equivalent to, the indenting bead were carried upon a stationary pipe-inclosing framework. They were adaptations of the screw-cutting lathe. The idea that this indenting element could be carried circumferentially upon the surface of a roll is not disclosed by any of the corrugating patents, had not occurred to these inventors, and to us seems not obvious. If it did occur to one, it seems likely that the thought would be rejected because all these corrugating and indenting rollers pressed inwardly on a pressure line radial to the pipe; and, while the same thing would be true of one centrally located bead in the upper and lower rollers, this would produce only two grooves—not enough for efficient rifling—and as soon as the beads were put anywhere except in the center of the rolls the indenting pressure became tangential and not radial. That this apparently abnormal action would produce a satisfactory result in pipe of this character is due only to the fact that well-shaped grooves are not necessary, and that a slight indentation is sufficient.

The twist drill machine is, upon the whole, no closer. It has skewed feed rolls, carrying one circumferential bead, but this also, being central on the roll, is radial to the pipe; and—more important than that—it was not designed to, and did not operate to, make an indented groove in pipes or in anything else. The groove was made by other

means, and, having been so provided, was then used as a means of twisting the weakened central web. It was a small device, used for making small things in a tool factory; and to take this device and enlarge it to be suitable for rolling-mill purposes, and to substitute tangential, small, slightly indenting beads for the single, radial, comparatively large gripping bead, producing eight-inch rifled pipe, instead of a small twist drill, impresses us as clear and strongly marked invention, which, while not primary in every sense of the word, yet is so distinct and so meritorious as to entitle Fell to a fairly broad and liberal construction of his patent. The advance was great enough and the invention clear enough so that we do not need to place reliance upon the great practical utility of the device, or upon the fact that defendants, after experimenting with several other forms, were apparently forced to adopt the same general plan of manipulation; though both of these features are present in this case.

The question of infringement requires an interpretation of the terms of the claim, which may or may not cover defendants' structure, according as the interpretation is liberal or narrow. The defendants, having received an order for a large quantity of this rifled pipe from the same customer who had been buying from plaintiff, and on the condition that they would sell at a less price, first tried a modification of the Isaacs and Speed device, and then made some other changes, settling down upon and continuing to use a structure which, instead of the conventional roll, is built up from discs of different sizes rigidly attached to a shaft. This structure is shown in comparison with plaintiff's by the following sketches made by plaintiff's expert, and which, though not accurate, are not essentially unfair (only the upper roll of the pair being shown):

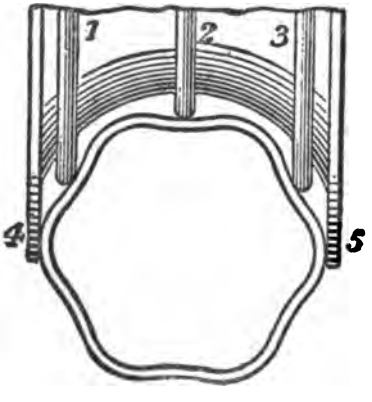

FELL.

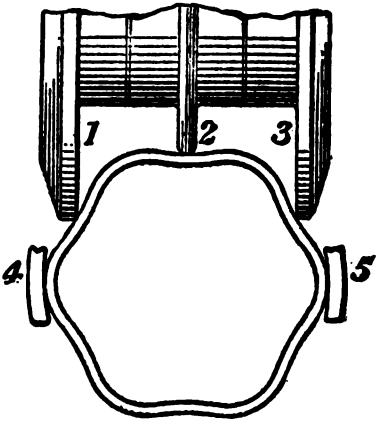

DEFENDANT.

It is obvious that if there was indenting pressure exercised vertically upon the upper and lower parts of a hot and ductile pipe, the circular cross-section would be distorted and the sides would be bulged out horizontally, unless resistance against such distortion was provided at this

point. The plaintiff's rolls, extending as they do to the same central, horizontal plane, provide this resistance by the extreme parts of the semielliptical concavity; and when these rolls are projected upon an intermediate vertical plane, as has been done in the above sketch, these extreme parts appear to be and may not improperly be thought of as flanges on the rolls, and they provide a rolling, frictional contact with the pipe, resisting the tendency to side expansion along and near its central, horizontal plane; and, while we recognize that the term lacks perfect accuracy, we shall, for convenience, speak of this part of the roll as the "flange." The defendants' rolling structure does not have this part. The largest disc on the upper roll is the one which makes the lowermost indentation in the upper half of the pipe, and as it does not extend below this point, it cannot provide resistance for the tendency to horizontal expansion; but, as this resistance is vitally necessary, the defendants provide it by guide-plates (*4* and *5*) fixed to the framework and accomplishing the same ultimate function by a sliding friction instead of a rolling friction. The defendants say of their device: First, that it is not a roll at all; second, that the roll flanges are an essential part of plaintiff's structure, and that these the defendants have omitted. It is also contended, rather as part of the first point just named, that the patent contemplates and is confined to a roll which is in contact with the walls of the pipe throughout the greater part of the roll surface between the beads, so as to have throughout its surface the forming function. The considerations which require that construction of the claim which will support these contentions are said to be found on the face of the patent, in the Patent Office proceedings and in the prior art.

We see nowhere any reason for doubting that the defendants' built-up structure comes within the broad and general definition of "a pair of skewed rolls with circumferential grooves having circumferential beads." As the beads are the chiefly effective parts in the rifling operation, it can make no difference whether they are built up by discs, leaving the intervening parts open, or whether all parts were first cast solid and then the intervening parts cut away. The points which grip and indent and forward and rotate the pipe are just the same whether the body of the device is in solid or in skeleton form. The development of defendants' structure demonstrates that it is "a pair of skewed rolls." They took their ordinary sizing rolls with semicircular groove, cast ribs in the grooves, and skewed the axes. This device would not work, because the pass was not circular. The extremities of the groove—what we have called the roll flanges—were, by the skewing, projected into the pass on the sides. These flanges being thus in the way, the defendants cut them off and substituted the guides, but by this change the rolls did not lose their general character; they continued to be skewed rolls, with a circumferential groove having circumferential beads. The defendants then cut away some of the face of the roll between the ribs, making the ribs higher, whereby it became apparent that they were, as they always had been, the edges of discs imbedded in the roll; but the structure did not, because its surface contour was thus changed, cease to be a roll carrying beads. It also

continued to have the circumferential groove. Obviously there must be grooves, or else the pipe could not pass through. A groove is an opening with a bottom and with sides, and these parts are sufficiently marked by the three discs. If these were close together, or if two more graduated discs were inserted between the central one and each side one, it would be perfectly apparent that there was a circumferential groove; and we think it no less true because the surface is not completely marked. We are not sure that defendants intend to deny that their device responds to a definition of the terms of the claim, so broadly considered.

Are the side-supporting flanges of plaintiff's rolls to be considered as performing a function essential to the device and as a feature which defendant must use, in form or by equivalent, before there is infringement? We think they are. It is true that the first claim does not call for these flanges in so many words, and that some of the other claims impliedly do so by calling for a "semielliptical groove or pass," since the groove will not be completely semielliptical unless it is carried down to the central plane; but this term, "a pair of rolls," used in this connection, necessarily means rolls that will roll pipe; and such a construction of them or their associated parts that the pipe will retain its general form is necessarily implied. However, the very fact that this limitation as to the form of the roll is not expressed in the claim, but that any implication on that subject arises from the necessity that the device shall operate, indicates that no narrow rule of equivalency can be applied, and that when something else is substituted which was already a well-known means of performing the same function, and when its construction did not involve any invention, the thing so substituted is a mechanical equivalent, and infringement is not thereby escaped. We have already pointed out that these side flanges or extreme ends of the semielliptical groove have no function, except to resist the outward bulge of the pipe at this point. In a fair sense they are rolling guides; and the stationary guides used by defendants (shown in cross-section in the above sketch) have precisely the same function and perform it in the same way, except that the friction is sliding instead of rolling. Further, the Root patent, No. 180,-643, of August 1, 1876, had skewed rolls, in each of which the groove or pass was not semielliptical, but more shallow, and was provided with central stationary guides or "keepers," all arranged (as said in defendants' brief) "just exactly as in defendants' machine." The defendants, therefore, have substituted for the roll flanges not only an equivalent, but a known equivalent; and this confirms the conclusion that infringement is not thereby avoided.

We find nothing upon the face of the patent requiring the claim to be limited to rolls which had these flanges attached to and integral with the rolls. It is true that neither by drawing nor specification does Fell suggest the performance of this function by stationary parts of the frame, but this is not necessary. In the absence of something clearly showing that the patentee did intend to have his grant confined to a specific form, a broad and generic claim may rightfully stand on a mere specific disclosure; and the invalidity of such a claim (if

it is invalid) will result, not from the applicant's failure to use more sweeping language in his specification, but from the state of the art limiting the actual invention. The claims are part of the description required by statute, and in them, and not in that part of the description which is now commonly called "specification," is the proper place in which to define the breadth of the invention, as was most accurately apprehended by Fell's solicitor when he (though quite unnecessarily) said that various changes might be made "without departing from my invention as defined by the appended claims."

[2] Nor can we find the supposed claim limitation to these specific roll-flanges in the fact that Fell's specification and drawings showed rolls having flanges, and that he claimed the rolls "substantially as described." The stress which defendants' counsel in argument have put upon this quoted phrase, and the constant recurrence of the question in cases coming before us, make it advisable to consider and determine what place this phrase should have in the rules of claim construction. We think a review of the controlling principles, of the authoritative cases, and of the established Patent Office practice, in the light of which its grants must be considered, demonstrate that, at least in all recent patents, and save in exceptional instances, the presence or absence of this phrase is of no interpretative importance.

Upon principle the matter seems clear. The statute requires that the specification should describe the invention, and that the patentee should specifically claim what is new. He cannot claim that which he has not substantially described; and it seems necessarily to follow that the idea—not "exactly as described" or "precisely as described," but "substantially as described," that is to say, "not varying in any vital way from the description" or "either in the form shown or in its substantial equivalent"—is necessarily inherent in every claim. So, in Mitchell v. Tilghman, 86 U. S. (19 Wall.) 287, 391 (22 L. Ed. 125), referring to these words, it was said, "Words of such import, if not expressed in the claim, must be implied"; and again, in Hobbs v. Beach, 180 U. S. 383, 400, 21 Sup. Ct. 409, 416 (45 L. Ed. 586), speaking of the rule that these words refer us back to the specifications, that court says, "This rule, however, is equally applicable whether these words be used or not." To say that these words must be implied, if not expressed, and to say that if expressed they import an otherwise nonexistent limitation, is to propound a dialectic paradox. We cannot lightly assume such a self-destructive contradiction in the law, and its seeming existence calls for a careful analysis of the apparently pertinent and authoritative cases.

In Seymour v. Osborne, 78 U. S. (11 Wall.) 516, 547 (20 L. Ed. 33), the question was whether the claims were void as being for an effect or a function, as, for example:

> "Discharging the cut grain from a quadrant-shaped platform on which it falls as it is cut, by means of an automatic sweep-rake sweeping over the same, substantially as described."

The court unquestionably placed reliance on this phrase, "substantially as described," in reaching the conclusion that the claims were not functional, but it is not apparent that the court would have reached

any different decision if the words had not been there; and the language of the opinion on this point is written by Mr. Justice Clifford, who, only three years later, in Mitchell v. Tilghman, supra, 19 Wall. 287, 391 (22 L. Ed. 125) found it necessary to use the language which we have already quoted:

"Words of such import, if not expressed in the claim, must be implied, else the patent in many cases would be invalid," etc.

It seems quite clear that Mr. Justice Clifford could not have regarded his language in Seymour v. Osborne as laying down any rule of law to the effect that the actual presence of words, always constructively present, could have controlling importance. It is further to be noted that Seymour v. Osborne was decided in 1870, construing patents issued before 1865, and both issue and construction were before the Patent Office rule on the subject became finally settled as hereafter pointed out. In the Corn Planter Patent, 90 U. S. (23 Wall.) 181, 23 L. Ed. 161, the claim involved called for a combination of several parts "substantially as and for the purpose set forth." From the discussion and disposition of the matter on pages 217, 218, and 219, it is apparent that the court construed the claim by reading into it what was necessary to make it an operative device of the general class and for the general purposes described; and it is difficult to see that any different course could have been taken if the concluding phrase had not been present in the claim. The remark that this phrase "throws us back to the specification for a qualification of the claim" seems rather casual, because clearly we will be thrown back to the specification for that purpose without any propelling aid from this clause. In Westinghouse v. Boyden, 170 U. S. 537, 18 Sup. Ct. 707, 42 L. Ed. 1136, the opinion was by Mr. Justice Brown, and his remark on this subject, on page 558, referred only to Seymour v. Osborne and to the Corn Planter Patent, omitting reference to Mitchell v. Tilghman. The question as to the proper construction of the claim had already been decided, and the presence of this phrase is only referred to as one of the "other facts which have a strong bearing in the same connection." Just as Mr. Justice Clifford, when the matter was the second time before him, did not seem to be controlled by his comment the first time, so Mr. Justice Brown, going into the subject more thoroughly in Hobbs v. Beach, was unwilling to say that these words had any meaning.

In Hobbs v. Beach, supra, 180 U. S., at page 399, 21 Sup. Ct. at page 416 (45 L. Ed. 586), the court was confronted more squarely than ever before with the question of what force should be given to these words. This question was one of those upon which the two courts below had differed, and if they were held to import full limitation to the form of the specifications and drawings, there was no infringement. It seems a fair conclusion from the opinion that Justice Brown found himself embarrassed by what had been said in the three last above cases, on the one side, and on the other by Mitchell v. Tilghman and the inevitable logic of the situation, which compelled him to say that the rule of going back to the specification for a qualification of the claim and for the elements of the combination "is equally applicable whether these words be used or not." He, therefore,

while unwilling to say that they are "absolutely meaningless," did conclude that "it is difficult to say exactly what effect should be given to these words," and that "the authorities really throw but little light upon their proper interpretation," and finally concluded that "without determining what particular meaning, if any, should be given to these words," they did not limit the patentee to the exact mechanism described, but that he was still entitled to the benefit of the doctrine of equivalents. In spite of the uncertainty shown by the language of the opinion, and on studying the specification and claim of the Beach patent and the scope that must be given in order to sustain the charge of infringement by defendant's device, and also the opinions of the courts below, it is difficult to see why Hobbs v. Beach is not a decision that a claim containing these words is entitled to the same breadth of benefit of the rule of equivalents as if the words were not there.[1]

Since Hobbs v. Beach, the Supreme Court has mentioned the question only once, so far as we find. In Singer v. Cramer, 192 U. S. 265, 284, 285, 24 Sup. Ct. 291, 48 L. Ed. 437, Mr. Justice White clearly indicates his supposition that the presence of this phrase in a claim did have a limiting effect; but what is said on this subject is without reference to Hobbs v. Beach, and is said after a discussion of the Patent Office proceedings and the limitations accepted therein had led him to the conclusion that the limited construction of the claim must be given. We do not think this case should be taken as a decision that the presence of the words necessarily imports a limitation. It may be usefully noted that in most, if not all, of those Supreme Court cases which give claims a broad construction and do not limit them to the form shown in the specification these words were present. See (e. g.) Winans v. Denmead, 56 U. S. (15 How.) 330, 14 L. Ed. 717; Clough v. Barker, 106 U. S. 166, 1 Sup. Ct. 188, 27 L. Ed. 134; Morley Co. v. Lancaster, 129 U. S. 263, 9 Sup. Ct. 299, 32 L. Ed. 715; Hoyt v. Horne, 145 U. S. 302, 12 Sup. Ct. 922, 36 L. Ed. 713.

In the decisions of this court, statements are to be found looking in both directions. In Stilwell Co. v. Eufala Co., 117 Fed. 410, 414, 54 C. C. A. 584, Judge Day was illustrating the rule that a claim should be construed by the specifications, and cited some of the above-named Supreme Court cases referring to "substantially as described." So far as the case indicates, he did not, in reaching the result, place any dependence upon that phrase; on the contrary, the defendant's claim of noninfringement was overruled and the claims were given a construction sufficiently broad to cover defendant's apparatus. In Sanders v. Hancock, 128 Fed. 434, 436, 63 C. C. A. 166, it was said of this phrase that it "carried into the claims the description of the specification." Judge Severens again was only illustrating the propriety of a

[1] In addition to the cases cited in Hobbs v. Beach, the Supreme Court had referred to the subject in Brown v. Davis, 116 U. S. 237, 251, 6 Sup. Ct. 379, 29 L. Ed. 659, and in Pope v. Gormully, 144 U. S. 248, 253, 12 Sup. Ct. 641, 36 L. Ed. 423, but in neither of these cases is the matter of any particular importance to the decision, nor is it considered upon principle or authority, nor in connection with the fixed Patent Office practice. See, also Avery v. Case (C. C.) 139 Fed. 878, 882 (reversed, but not on this point, in 148 Fed. 214, 78 C. C. A. 110).

decision that when an element was named in a claim without description, except the name, resort should be had to the specification to see what the element was. That no decision was intended as to the definite effect of "substantially as described" is evident from the fact that of the four cases cited by Judge Severens one (Stilwell Co. v. Eufala Co.) treated the point only incidentally as above noticed, two (Soehner v. Favorite Co., 84 Fed. 182, 28 C. C. A. 317, and Canda v. Michigan Co., 124 Fed. 486, 61 C. C. A. 194) contain no reference to the point, and the remaining one (Lamb Co. v. Lamb Co., 120 Fed. 267, 269, 56 C. C. A. 547) says it is not necessary to enter into this "beclouded question." When, however, in General Elec. Co. v. International Co., 126 Fed. 755, 758, 61 C. C. A. 329, the limiting force of this phrase was somewhat more directly involved, and the then recent case of Hobbs v. Beach was apparently first considered by this court, it was held that these words did not import into the claim all the details of the specification, but only meant that if the parts named in the claim operated substantially as described, "that is all that is necessary." So, in Houser v. Starr, 203 Fed. 264, 269, 121 C. C. A. 462, 467, we said (though unnecessarily to the decision):

"Whatever parts are named in the claim are of necessity intended to be named with reference to the specification and drawings. The reference cannot be made narrower by saying, 'as described,' nor broader by saying, 'substantially.' The words 'substantially as described' do not create this necessity for construction by the entire patent; they are only a formula of recognition of the rule." [2]

[3] If, however, there was a doubt about the force to be given in the present case to this phrase as one of limitation, that doubt must be set at rest by consideration of the rules of construction in force in the Patent Office when this patent issued. The meaning put upon possibly ambiguous language of the grant, both by the Patent Office and by the patentee, becomes a binding rule of construction of that grant. This is both by the general law of contracts and by the rules of estoppel. It seemingly must be equally true of a fixed and universal construction, applied all the time to all patents, and presumably known to all patentees, as of a special meaning fixed by the special action. Just as a statute adopted from another state after interpretation by its highest court must, in the adopting state, receive the same construction, so when the Patent Office has a settled rule of construction under which a certain phrase in a patent grant has a fixed meaning, acquiesced in by the patentee, the courts cannot afterwards rightfully say that the phrase means something more or something less. In 1902 the practice of the Patent Office on this subject was considered, and, so far as there had been any uncertainty, was finally settled by Commissioner Allen in his decision in Ex parte Shepler, 102 O. G. 468. The substance of this ruling is that thereafter these words in a claim shall be considered as "inconsequential," and that a claim with them in is no narrower

[2] In this court, as in the Supreme Court, it is useful to observe that we have given a broad construction to claims containing the phrase and a narrow construction to those which did not, often apparently quite regardless of its presence.

than a claim without them. The importance of the opinion merits its reproduction in full in the margin.[3] This general view of the matter was not new in 1902. As early as 1869, Commissioner Fisher (In re Rubens & Co., Com. Dec. of 1869, p. 107) said:

"The practice of allowing claims for inventions which can only be distinguished from those previously invented or patented by the construction to be given to such words as 'substantially as described,' 'as herein set forth,' etc., cannot be too strongly condemned. The claim should state all the elements of the combination intended to be patented, and if the parts are the same in name and number as in some prior machine, and the improvement consists in some modification of one or more of those parts, the claim should distinctly state that modification. It should not be concealed in ambiguous phrases. The words 'substantially as described,' and the like, have no fixed legal meaning. They may serve to expand or contract the claim. In general, they are employed for the latter purpose, so that a claim may appear to be broad upon its face which, in truth, by virtue of this mysterious phraseology, is exceedingly narrow. Sometimes they are added by inventors as a matter of course, by way of rounding off the claim, and have no particular meaning, and again, they are intended to signify that the patentee claims that which he describes and everything substantially like it. They are, at the best, ambiguous and dangerous phrases, and, however else they may be used, they must not be employed in the granting of letters patent to make a claim good that, without them, would be bad and unpatentable.

---

[3] Allen, Commissioner: This is a petition from the action of the primary examiner requiring the applicant to elect between two sets of claims on the ground that they are substantially the same. The two sets of claims are identical, except that one includes the words "substantially as described." The question is whether a claim including these words is substantially different from the same claim omitting them. It is a fundamental rule that the claim of a patent must be construed by reference to the description accompanying it, and this is true whatever form the claim may take. Under section 4884, Revised Statutes, the specification is a part of the patent, and it is the rule that in determining the legal effect of an instrument all parts of it must be taken into consideration. In a patent the specification particularly describes the thing which the applicant has made, and the claim points out the part or parts of that thing which the applicant regards as new. Section 4888, Rev. Stats. It is unnecessary in the claim to say that it has reference to what is described, for that is obvious and necessarily follows from the provisions of the law itself.

As said by the Supreme Court in Hobbs v. Beach, 180 U. S. 383, 21 Sup. Ct. 409, 45 L. Ed. 586, in reference to the words "substantially as described": "So in the corn-planter patent (23 Wall. 181, 218 [23 L. Ed. 161]), it was said that 'this clause throws us back to the specification for a qualification of the claim, and the several elements of which the combination is composed.' This rule, however, is equally applicable whether these words be used or not."

The petitioner in this case seems to think that the courts may give the claim a broader construction upon the question of equivalents if the words "substantially as described" are not included, and therefore argues that the claims are not the same in scope. Even if the words will be construed as having this effect, they do not themselves import any definite limitation into the claim. They leave that to the construction of the court in view of the facts brought to its attention in the particular case before it, and therefore to this extent they are vague and indefinite. If there are any particular limitations which the applicant wishes these words to import into the claim, he should state them clearly and definitely, instead of attempting to include them by a blanketing clause at the end of the claim, the effect and meaning of which is, according to his own showing, very uncertain. The law requires that the patentee distinctly claim the features which he regards as his invention, and it is the duty of this office to require that the claims be made definite and cer-

"In conformity with the current practice of the office * * * the concluding words of the second and third claims should be ignored in considering the novelty of what is therein claimed."

In 1872, Commissioner Thatcher said (In re Sperry, Com. Dec. 1872, p. 221):

"It has become the settled practice of the office to reject the clause as a limitation unless so placed as to obtain special significance."

Again, Commissioner Leggett said of these words (In re Collins Co., Com. Dec. 1872, p. 251):

"There is no objection whatever to their use where they make sense; but they have no legal effect either to enlarge or limit a claim properly drawn; and, so far as the grant of the patent is concerned, they should have no influence one way or the other. The claim should be sufficient in its terms either with or without them, because, either with or without them, its meaning and effect are to be determined in the courts by the light of the specification."

The only exception to this rule—that the words are "inconsequential"—which seems to inhere in the situation is that if a patent was issued which contained two claims not distinguishable from each other save by the presence in one claim of this phrase, it might be the duty of the court, in giving effect to every part of the patent, to find in them

tain. The fact that the courts in order to secure to a meritorious inventor the protection to which he is entitled sometimes sustain a vague and indefinite claim by construing it as covering the particular thing invented is no reason for the allowance by this office of vague claims.

In Merrill v. Yoemans, 94 U. S. 568, 24 L. Ed. 235, the Supreme Court said: "The developed and improved condition of the patent law, and of the principles which govern the exclusive rights conferred by it, leave no excuse for ambiguous language or vague descriptions."

As said by the Supreme Court in Burr v. Duryee, 1 Wall. 533, 17 L. Ed. 650: "Here we have the first experiment in the art of expansion by an equivocal claim, which may be construed a claim for the result or product of the machine, or for its principle or mode of operation. By this construction another inventor may be frightened from the course. But when challenged in a court of justice as too broad, the words 'substantially as herein described,' may be resorted to as qualifying this claim of a function, result, or principle, and arguing that as the specification described a machine, it meant nothing more."

The purpose here stated by the court seems to be the only one for attempting to limit a claim by the words "substantially as described," instead of definitely stating the limitations intended to be included thereby. If the use of these words serves to accomplish this purpose, the result is to conceal the scope of the claim instead of making it clear, as required by law, and this is not permissible. If these words alone are regarded as sufficient to distinguish claims, it would seem that a third set, including the words "identically as described," should be allowed.

It is no more permissible on principle to refer to the description for some limitations which should be and are intended to be included in the claim than it is to refer to the description for all of the limitations, as by a claim covering "the device substantially as described." Without regard to the effect which the courts may in particular instances give to the words "substantially as described," it must be held that this office in its treatment of claims must regard them as inconsequential.

The examiner's requirement is right, and the petition is denied.

some distinguishing force; but if such instances exist at all of late years, it can only be by inadvertence in the Patent Office.[4]

The foregoing considerations seem to us fully to justify the proposition with which this discussion is opened—that at least in all recent patents, and save in possible exceptional instances, the presence or absence of this phrase is of no interpretative importance.[5]

Limitation to Fell's specific form of roll and differentiation from defendants' three-disc structure are also thought to be found in the drawings, showing that practically all of the roll surface between the beads was in contact with or "hugged" the pipe surface, and in the specification referring to this portion of the roll surface as a "forming wall." It appears to be a fact beyond dispute that this contact could not occur to anything like the extent shown in the drawings, unless the pipe material was too soft to be capable of rolling without a mandrel, and that in the practical operation of plaintiff's device there is contact, if at all, only at one point midway between the beads; while the successful use of defendants' device demonstrates that even so much contact is unnecessary. It is clear enough that the solicitor and the draftsman supposed that the rolls would operate in the specific way shown in this figure 3 of the drawing, and Fell is probably chargeable with the same supposition; but this comes to nothing more than an illustration and description of the supposed best form of device, with specific claims limited to that form, but accompanied by broad claims lacking such limitation. Claims 10 and 12, for example, cannot be effectively distinguished from the first three claims, except by the added limitation:

"The walls of said passes being arranged to support the pipe or tube adjacent to the points of contact of the bending ribs or beads therewith and between such ribs or beads."

[4] Where a patent contains both a broad and a narrow claim and suit is brought on the broad claim, we cannot construe into it a limitation not therein expressed, but which is expressed in the narrower claim and by which alone one is distinguished from the other. To do so would be making over the contract between the public and the patentee. Bresnahan v. Tripp Co. (C. C. A. 1) 102 Fed. 899, 900, 43 C. C. A. 48; O'Rourke Co. v. McMullen (C. C. A. 2) 160 Fed. 933, 939, 940, 88 C. C. A. 115; National Co. v. American Co. (C. C. A. 3) 53 Fed. 367, 370, 3 C. C. A. 559; Lamson v. Hillman (C. C. A. 7) 123 F. 416, 419, 59 C. C. A. 510; Mast, Foos & Co. v. Dempster Co. (C. C. A. 8) 82 Fed. 327, 333, 27 C. C. A. 191; Duncan v. Cincinnati Co. (C. C. A. 6) 171 Fed. 656, 663, 96 C. C. A. 400; Sheffield Co. v. D'Arcy (C. C. A. 6)

[4] Twenty-five years ago practically all patents used this "rounding off" phrase; now not one in ten (see any current number of Patent Office Gazette). It is not to be supposed that patents are growing broader as their number increases.

[5] For further discussion either in effect reaching, or at least supporting, our conclusion, see Lake Shore R. R. Co. v. Carbrake Co., 110 U. S. 229, 235, 236, 4 Sup. Ct. 33, 28 L. Ed. 129; Boynton Co. v. Morris Co., 87 Fed. (C. C. A. 3) 225, 226, 227, 30 C. C. A. 617; Westinghouse Co. v. Stanley Co. (C. C. A. 1) 133 Fed. 167, 182, 68 C. C. A. 523; American Co. v. Hickmott Co. (C. C. A. 9) 142 Fed. 141, 146, 73 C. C. A. 359; Draper v. American Co. (C. C. A. 1) 161 Fed. 728, 731, 88 C. C. A. 588.

194 Fed. 686, 691, 116 C. C. A. 322; Scaife v. Falls City Co. (C. C. A. 6) 209 Fed. 210, 214, 126 C. C. A. 304.

[5] The history of the application in the Patent Office furnishes no support for the conclusion that the roll flanges in the form shown are inherent in the first three claims. It is sufficient to say of these proceedings that, in so far as there is indication of any attempt to impose such a limited construction on these claims, the record shows that, as is so often the case, the examiner and not the applicant yielded. It is not necessarily of any importance that, when the examiner rejects a claim on reference to an earlier patent, the applicant thereupon amends the claim. Such a record is of importance and raises an estoppel against the patentee only when it additionally appears that the effect of the amendment was to narrow the claim so that it no longer depended in material part upon any theory of patentable novelty, upon which same theory the patentee afterwards attempts to support the validity or scope of his amended claim. Amendments which, when examined, are found to be mere matters of form, or which do not have a limiting effect in the particular which is involved in the later judicial inquiry, do not estop the patentee from receiving such a construction of his patent as will protect his actual invention, and so far as permitted by the claim language finally adopted. Scaife v. Falls City Co. (C. C. A. 6) 209 Fed. 210, and cases cited in notes 8 and 9, p. 217, 126 C. C. A. 304, 311.

The first three claims were originally filed in the same form as when issued, except that there were added, by amendment, and by way of further description, the words "skewed" as to the rolls, "circumferential" as to the grooves or passes, "rifling" as to the beads or ribs, "for the pipes or tubes" after "passes," and "circumferentially" before "extending beads or ribs." Every change except the last was obviously immaterial, because the added words were already inherent in the claims; and the limitation to "circumferentially" extending beads was inserted to distinguish from a reference having beads, or something similar, longitudinal on the rolls. With this limitation defendants are not concerned, because they use "circumferentially" extending beads or their equivalent. It is true that these three claims were once rejected on Denk, above described; but Fell not only declined to make any change whatever in them because of this rejection, but insisted that the examiner had "misunderstood the reference," and that "applicant's method of rifling pipe is believed to be broadly new. It is believed he is entitled to the broad claims presented." He added in this letter:

> "Furthermore * * * the reference does not show the walls of the passes arranged to support the article."

This sentence has no possible effect to limit these three claims to passes which have walls so arranged, not only because it is added as mere makeweight to the sufficient reasons already given, but also because it had special and appropriate application to the further claims which already contained this limitation, and which also had been rejected upon the Denk reference. When later these three claims and others were further rejected on reference to Fife's patent for corrugating tubes, above described, Fell amended these by inserting the pro-

vision that the grooves or passes should be circumferential. We have said above that this limitation already existed, and so Fell wrote:

"In fact, while claims 1, 2, and 3 have been amended for the purpose of making them more clear, the pertinency of the reference to any of the claims is not clear."

The remainder of his amendments made at this time, and in answer to this citation, refer to other claims, and cannot affect the first three. The claims were again rejected on reference to a patent which had rolls parallel with the pipe axis, and in which the spiral corrugations in the pipe were formed by the spiral corrugations in the mandrel. In answer to this reference Fell points out this distinction, and (again unnecessarily) inserts "skewed" with reference to his rolls. At the same time he made other comments, which might or might not have a limiting effect on other claims, but which could not affect these three.

Our review of these Patent Office proceedings satisfies us that they furnish no support for the theory of such limitation as will avoid infringement of claims 1, 2, and 3; their whole tendency is in the contrary direction.

The prior art has nothing closer than these earlier patents already discussed.

The decree below must be reversed, with costs in favor of appellant, and the usual decree for injunction and accounting entered as to claims 1, 2, and 3.

(217 Fed. 43)

BEATSON COPPER CO. v. PEDRIN.

(Circuit Court of Appeals, Ninth Circuit. October 5, 1914. Rehearing Denied November 17, 1914.)

No. 2360.

1. APPEAL AND ERROR (§§ 272, 501*)—REVIEW—GIVING OR REFUSAL OF INSTRUCTIONS—EXCEPTIONS.

The giving or refusal of instructions cannot be reviewed by an appellate court, unless exceptions thereto were taken in open court while the jury were at the bar, and such fact must be shown by the record.

[Ed. Note.—For other cases, see Appeal and Error, Cent. Dig. §§ 1611–1619, 2300–2305; Dec. Dig. §§ 272, 501.*]

2. MASTER AND SERVANT (§ 270*)—ACTION FOR INJURY TO SERVANT—EVIDENCE.

In an action for an injury to a mine employé against the employer, evidence to show the rule or custom prevailing in such workings with respect to the inspection of walls after a shot, and the person whose duty it was to attend to the same, *held* competent.

[Ed. Note.—For other cases, see Master and Servant, Cent. Dig. §§ 913–927, 932; Dec. Dig. § 270.*]

3. MASTER AND SERVANT (§ 284*)—ACTION FOR INJURY TO SERVANT—QUESTIONS FOR JURY.

Evidence in an action for injury to a mine employé *held* such as to make it proper to submit the case to the jury.

[Ed. Note.—For other cases, see Master and Servant, Cent. Dig. §§ 1000–1090, 1092–1132; Dec. Dig. § 284.*]

In Error to the District Court of the United States for the Third Division of the Territory of Alaska; Fred M. Brown, Judge.

*For other cases see same topic & § NUMBER in Dec. & Am. Digs. 1907 to date, & Rep'r Indexes

Action at law by John Pedrin against the Beatson Copper Company. Judgment for plaintiff, and defendant brings error. Affirmed.

R. J. Boryer, of Cordova, Alaska, and Myrick & Deering, of San Francisco, Cal., for plaintiff in error.

T. C. West, of San Francisco, Cal., and E. E. Ritchie, of Valdez, Alaska, for defendant in error.

Before GILBERT and ROSS, Circuit Judges, and WOLVERTON, District Judge.

ROSS, Circuit Judge. This action was brought by the defendant in error as plaintiff in the court below to recover damages for personal injuries sustained by him while working in a mine of the Beatson Copper Company through its alleged negligence, which alleged negligence was denied by the company, the plaintiff in error here, in addition to which it set up in its answer the defenses of assumption of risk and contributory negligence on the part of the plaintiff and negligence of his fellow servants. The trial resulted in a verdict for the plaintiff, the case being brought here by writ of error.

[1] The points mainly relied upon in argument by the counsel for the plaintiff in error relate to the giving and refusal to give certain instructions to the jury, which, upon reference to the record, we find we are precluded from considering, for the reason that the action of the court in the respects complained of was not seasonably excepted to; the record showing that the case was submitted to the jury on the 11th of November, 1913, and that the defendant's exceptions were not entered until November 14, 1913—the bill of exceptions reciting:

"It having been stipulated between the attorneys for plaintiff and defendant in the presence of the jury before it had retired, and in the presence of the court, that the plaintiff and defendant have until the 16th day of November, 1913, to make and take exceptions to instructions given and refused."

In the case of Arizona & N. M. Ry. Co. v. Clark, 207 Fed. 817, 125 C. C. A. 305, we said:

"There are various assignments of error in respect to giving and refusal to give certain instructions to the jury, which we are precluded from considering for the reason that exceptions thereto were not seasonably taken. The record shows that, after the jury had been instructed and retired in charge of the bailiffs, certain exceptions were taken by counsel for the respective parties, and the record shows that: 'Before the jury retired to consider of their verdict the court granted permission to the defendant to embody in its bill of exceptions, if it should tender one, its objections to the instructions of the court to the jury more at length and in detail.' That none of such exceptions can be here considered was distinctly decided by this court in the case of Western Union Tel. Co. v. Baker, 85 Fed. 690, 29 C. C. A. 392, and has been so held by many other federal courts. See the numerous cases cited in that last mentioned, and in Star Co. v. Madden, 188 Fed. 910, 110 C. C. A. 652, where is set out the rule laid down by the Supreme Court in Phelps v. Mayer, 15 How. 161, 14 L. Ed. 643, as follows: 'It has been repeatedly decided by this court that it must appear by the transcript, not only that the instructions were given or refused at the trial, but also that the party who complains of them excepted to them while the jury were at the bar. The statute of Westminster II, which provides for the proceeding by exception, requires, in explicit terms, that this should be done, and, if it is not done, the charge of the court, or its refusal to charge as requested, form no part of the record, and cannot be carried before the appellate court by writ of error. It need not

be drawn out in form and signed before the jury retire; but it must be taken in open court, and must appear, by the certificate of the judge who authenticates it, to have been so taken. Nor is this a mere formal or technical provision. It was introduced and is adhered to for purposes of justice.' "

[2] In the present case the record shows that the plaintiff was an experienced miner and had been working at the place where the accident occurred about two weeks prior to its happening. The place was what is spoken of in the record as a "glory hole," and was from 14 to 15 feet wide, from 10 to 12 feet deep, and about 20 feet long. Working there were two drillers, who, after drilling and loading the holes, fired the shots, and the plaintiff and another mucker, whose duty it was to remove the broken rock and earth—when necessary breaking, or "bulldozing," as the operation is spoken of by witnesses, the larger pieces of rock in order to do so. This shift of four men was in charge of a shift boss named Green. On the trial one Gleason, a witness on behalf of the plaintiff, was asked this question:

"Now, where a shot is fired in the walls of a mine, particularly an open mine or a glory hole, is there any rule about making an inspection of the surrounding walls immediately afterwards?"

To which objection, interposed by the defendant, was overruled by the court, and its ruling also assigned as error; the answer of the witness being:

"The rule is that a man has got to bar down his ground to make it safe, not to have loose ground in the walls after a blast; that is, if a man is going to work under it."

And a like objection, ruling, and assignment were made in respect to this other question to the witness:

"Where work is being done under the direction of a foreman or shift boss, who looks after that? A. Why, the foreman or shift boss, who is in charge."

[3] We see no error in those rulings, nor any error in the ruling of the trial court in denying the motion made on behalf of the defendant upon the conclusion of the plaintiff's evidence, and also upon the conclusion of the entire evidence in the case, for a directed verdict in its favor. The evidence, we think, was such as to make the case a proper one for submission to the jury under appropriate instructions.

The judgment is affirmed.

(217 Fed. 45)

UNITED STATES v. LI CHIONG.

(Circuit Court of Appeals, Ninth Circuit. October 6, 1914.)

No. 2317.

ALIENS (§ 32*)—IMMIGRATION—CHINESE—RIGHT TO ENTER—DECISION OF IMMIGRATION AUTHORITIES.

Since the collector of customs, in determining the right of a Chinese person to land, may act on his own information and discretion, and such action, however taken, is conclusive, subject to the right of appeal to the Secretary of the Treasury, the fact that the collector, in determining that

*For other cases see same topic & § NUMBER in Dec. & Am. Digs. 1907 to date, & Rep'r Indexes

relator was not entitled to enter, failed to give to relator's certificate identifying him as a merchant, issued under Act May 6, 1882, c. 126, § 6, 22 Stat. 60, as amended by Act July 5, 1884, c. 220, 23 Stat. 116 (U. S. Comp. St. 1901, p. 1307), the effect to which it was legally entitled, but, considering all the testimony, rejected the certificate as evidence of relator's right to land, did not entitle relator to his discharge on habeas corpus.

[Ed. Note.—For other cases, see Aliens, Cent. Dig. §§ 84, 92, 93-95; Dec. Dig. § 32.*

What Chinese persons are excluded from the United States, see note to Wong You v. United States, 104 C. C. A. 538.]

Appeal from the District Court of the United States for the Territory of Hawaii; Sanford B. Dole, Judge.

Application by Li Chiong for a writ of habeas corpus to obtain his discharge from custody of the immigration authorities, after having been denied his right to enter the United States on a merchant's certificate. From an order granting the writ, and directing that petitioner be allowed to enter, the United States appeals. Reversed and remanded.

The United States appeals from the judgment of the District Court of the Territory of Hawaii, discharging upon writ of habeas corpus the appellee, a Chinese alien, from the custody of the immigration authorities, who held him for the purpose of preventing him from entering the United States, under the Chinese Exclusion Act. The appellee presented to the immigration inspector at Honolulu a certificate, as provided by section 6 of the act of 1882, as amended by the act of 1884, issued by the Chinese consul general at Manila and visèed by the insular collector of customs at that port, certifying that the appellee was a merchant, and was interested in a business firm in Manila, and had pursued the occupation of merchant since 1904. The certificate was issued on October 9, 1911, and was visèed three days later. The appellee, upon receiving the certificate, left the Philippine Islands for China, and there resided some 18 months, after which he took passage for the United States. The immigration authorities denied his right to land, on the ground that it had been 1 year and 7 months since the certificate was issued, and he had not visited his business at Manila, except briefly, while his steamer was stopping at that port en route to the United States, and that he had not followed a mercantile pursuit since the date of the certificate, and that there was nothing to show that he would follow that pursuit if allowed to enter the United States.

The petition for the writ set forth these facts, and alleged that the hearing had before the immigration officers was not a full and fair hearing, but was only the semblance of a hearing, and that the appellee was denied and refused the right to have counsel and an interpreter during the examination, and that the certificate was not given the weight to which it was by law entitled, but that decision was rendered directly contrary to the certificate and to the evidence. The trial court upon the hearing ruled that the appellee was entitled to his discharge from custody upon the ground that the immigration officers had denied the legal validity of the certificate, which the statute declared should be prima facie evidence of the facts set forth therein, and the "sole evidence permissible on the part of the person so producing the same to establish the right of entry into the United States." The court said: "From this we find that all that the petitioner had to do was to produce his certificate. In fact, he should not have been permitted to do anything more than to exhibit his certificate, leaving it to the government to controvert and disprove the same. This has not been done, except as the government may have considered the petitioner's testimony to have controverted and disproved the certificate, and the facts therein stated, which cannot be said to have happened. The inspector in charge has, in the view of this court, mistaken the law of the case."

*For other cases see same topic & § NUMBER in Dec. & Am. Digs. 1907 to date, & Rep'r Indexes

John W. Preston, U. S. Atty., and Earl H. Pier, Sp. Asst. U. S. Atty., both of San Francisco, Cal., for appellant.

Before GILBERT and ROSS, Circuit Judges, and DIETRICH, District Judge.

GILBERT, Circuit Judge (after stating the facts as above). The decision of the case on appeal is ruled by Lee Lung v. Patterson, 186 U. S. 168, 22 Sup. Ct. 795, 46 L. Ed. 1108. In that case the court quoted and adopted the language of the District Court in Re Lee Lung, 102 Fed. 132, 134, as follows:

"These cases establish the doctrine that the collector of customs, in determining the right of Chinese persons to land, may act upon his own information and discretion, and that such action, however taken, is conclusive of the matter, subject to the right of appeal to the Secretary of the Treasury; that his decision, if he decides not to hear testimony, or not to give effect to evidence which the laws of Congress have provided, shall be sufficient to establish the right to land in the first instance, or decides not to decide, is conclusive."

Answering the argument that the statute makes such a certificate evidence which the immigration officers have no power to disregard, the court said:

"But jurisdiction is given to the collector over the right of the alien to land, and necessarily jurisdiction is given to pass on the evidence presented to establish that right. He may determine the validity of the evidence, or receive testimony to controvert it, and we cannot assent to the proposition that an officer or tribunal, invested with jurisdiction of a matter, loses that jurisdiction by not giving sufficient weight to evidence, or by rejecting proper evidence, or by admitting that which is improper."

Applying the doctrine of that case, there is no room to question the authority of the immigration officers to do as they did in this case, upon consideration of all the testimony, reject the evidence of the certificate notwithstanding that by an act of Congress it was made prima facie evidence of the right of the applicant to land in the United States, and to decide as they did, to deny controlling effect to evidence which the laws of Congress have provided should be but prima facie sufficient to establish the right to land.

It follows that the judgment of the court below must be reversed, and the cause remanded, with instructions to remand the appellee to the custody of the officers from whom he was taken.

(217 Fed. 48)

LEE LEONG v. UNITED STATES.

(Circuit Court of Appeals, Ninth Circuit. October 6, 1914. Rehearing Denied November 17, 1914.)

No. 2331.

1. HABEAS CORPUS (§ 54*)—PETITION—SUFFICIENCY—DEPORTATION OF CHINESE.

A petition by a Chinese person, who has been ordered deported, for a writ of habeas corpus, which alleges that petitioner was not given a fair hearing, but does not state wherein or in what respect such hearing was denied, is insufficient to sustain jurisdiction to issue the writ.

[Ed. Note.—For other cases, see Habeas Corpus, Cent. Dig. § 51; Dec. Dig. § 54.*

What Chinese persons are excluded from the United States, see note to Wong You v. United States, 104 C. C. A. 538.]

2. ALIENS (§ 46*)—IMMIGRATION—EFFECT OF TERRITORIAL STATUTE.

Act Hawaii April 17, 1911, which authorizes the secretary of the territory, when satisfied that a person was born in the Hawaiian Islands, to issue to such person a certificate showing that fact, which shall be prima facie evidence thereof, cannot affect the laws of the United States in regard to the immigration of aliens.

[Ed. Note.—For other cases, see Aliens, Cent. Dig. § 105; Dec. Dig. § 46.*]

Appeal from the District Court of the United States for the Territory of Hawaii; Chas. F. Clemons, Judge.

In the matter of the petition of Lee Leong for writ of habeas corpus. From an order denying the writ, petitioner appeals. Affirmed.

The appellant appeals from an order of deportation made by the District Court of the United States for the territory of Hawaii, upon a hearing on the return to a writ of habeas corpus. The petition for the writ alleged that the appellant was born in the territory of Hawaii January 21, 1888, of Chinese parents there residing; that about four years later he was taken by his parents to China, and there remained until February, 1913, when he left for Honolulu; that upon February 21, 1912, the secretary of the territory of Hawaii, after application, and upon due hearing as provided by law, issued a certificate certifying that the appellant was born in the Hawaiian Islands on or about January 21, 1888. The petition further alleged that the appellant was given but the semblance of a hearing before the immigration officers, to determine whether he should be allowed to land, and that said hearing was not a fair and bona fide hearing, but that the proceedings were conducted in an illegal and improper manner, and not in accordance with the acts of Congress. Upon the hearing, testimony of witnesses was taken, and the immigration officers thereupon denied the right of the appellant to land, and ordered him deported to China.

Andrews & Quarls, of Honolulu, Hawaii (George S. Curry, of Honolulu, Hawaii, and James A. Ballentine, of San Francisco, Cal., of counsel), for appellant.

Before GILBERT and ROSS, Circuit Judges, and DIETRICH, District Judge.

GILBERT, Circuit Judge (after stating the facts as above). [1] It is not specified in the petition for the writ wherein or in what respect the appellant was denied a fair and impartial hearing. The allega-

*For other cases see same topic & § NUMBER in Dec. & Am. Digs. 1907 to date, & Rep'r Indexes

tions in that respect are not sufficient to sustain jurisdiction to issue the writ.

[2] But counsel for the appellant urge that the decision was contrary to law, in that the immigration officers denied to the certificate of birth that consideration which in law it was entitled to receive. The certificate was issued under an act of the Legislature of Hawaii approved April 17, 1911, which provides in substance that the secretary of the territory of Hawaii may, whenever satisfied that any person was born within the Hawaiian Islands, cause to be issued to such person a certificate showing that fact. It provides that the application shall be on sworn petition and accompanied by affidavits of witnesses, and that the secretary may examine under oath any applicant or persons cognizant of the facts regarding the application, and it further provides that any certificate so issued shall be prima facie evidence of the facts therein stated.

Two grounds may be suggested on which it should be held that there was no error in denying to the certificate a controlling effect on the hearing. In the first place, no act of the territory of Hawaii can avail to affect the laws of the United States in regard to the emigration of aliens. Williams v. United States, 137 U. S. 113, 11 Sup. Ct. 43, 34 L. Ed. 590. In the second place, assuming that the certificate of the secretary of the territory of Hawaii was, as the law declared it to be, prima facie evidence of the facts recited, there is in the record ample evidence to justify the immigration officers in ruling that the prima facie presumption was overcome. This was the conclusion of the court below, and we find no error therein. Lee Lung v. Patterson, 186 U. S. 168, 22 Sup. Ct. 795, 46 L. Ed. 1108.

The judgment is affirmed.

(217 Fed. 49)

UNITED STATES v. TSURUKICHI NAKAO.

(Circuit Court of Appeals, Ninth Circuit. October 6, 1914.)

No. 2318.

ALIENS (§ 46*)—IMMIGRATION—RE-ENTRY OF DOMICILED ALIEN.

The provisions of Immigration Act Feb. 20, 1907, c. 1134, 34 Stat. 898 (U. S. Comp. St. Supp. 1911, p. 499), respecting the admission and deportation of an alien, apply to an alien who, having remained in this country for more than three years after first entry, and having gone abroad, although for a temporary purpose, with the intention of returning, again seeks admittance to the United States.

[Ed. Note.—For other cases, see Aliens, Cent. Dig. § 105; Dec. Dig. § 46.*]

Appeal from the District Court of the United States for the Territory of Hawaii; Sanford B. Dole, Judge.

In the matter of the application of Tsurukichi Nakao for writ of habeas corpus. From an order granting the writ, the United States appeals. Reversed.

The appellee, a subject of the Emperor of Japan, came to the Hawaiian Islands in November, 1892, and remained there until November, 1908, when he

*For other cases see same topic & § NUMBER in Dec. & Am. Digs. 1907 to date, & Rep'r Indexes

returned to Japan, not intending to abandon or surrender his right to come again to Hawaii as a domiciled alien. He returned to Honolulu on May 23, 1913. The medical officers of the United States Public Health and Marine Hospital Service found that he was afflicted with trachoma. He was thereupon denied the right to land in the territory of Hawaii. The Board of Special Inquiry found that he was not a domiciled alien. He took an appeal from that decision to the Secretary of Labor. On the appeal the decision was affirmed. On a petition alleging that the Board of Special Inquiry committed an error of law, by reason of the fact that the evidence adduced before the Board affirmatively showed that the appellee was a domiciled alien, within the meaning of the laws of the United States, the court below issued a writ of habeas corpus, and upon the hearing on the return thereto ordered that the appellee be discharged from custody.

John W. Preston, U. S. Atty., and Earl H. Pier, Sp. Asst. U. S. Atty., both of San Francisco, Cal., for appellant.

Before GILBERT and ROSS, Circuit Judges, and DIETRICH, District Judge.

GILBERT, Circuit Judge (after stating the facts as above). The judgment of the court below must be reversed, on the authority of Lapina v. Williams, Commissioner of Immigration, 232 U. S. 78, 34 Sup. Ct. 196, 58 L. Ed. 515, holding that the provisions of the Immigration Act of 1907 respecting admission and deportation apply to an alien who, having remained in this country for more than three years after first entry, and having gone abroad for a temporary purpose, with the intention of returning again, seeks admittance to the United States.

The judgment is reversed, and the cause is remanded to the court below, with instruction to remand the appellee to the custody of the officers from whom he was taken.

(217 Fed. 50)

UNITED STATES v. TSUNEZO KUSANO.

(Circuit Court of Appeals, Ninth Circuit. October 6, 1914.)

No. 2319.

Appeal from the District Court of the United States for the Territory of Hawaii; Sanford B. Dole, Judge.

In the matter of the application of Tsunezo Kusano for writ of habeas corpus. From an order granting the writ, the United States appeals. Reversed.

John W. Preston, U. S. Atty., of San Francisco, Cal., and Earl H. Pier, Sp. Asst. U. S. Atty., of San Francisco, Cal., for appellant.

Before GILBERT and ROSS, Circuit Judges, and DIETRICH, District Judge.

GILBERT, Circuit Judge. The facts set forth in the petition for the writ of habeas corpus in this case are identical with those which were under consideration in United States v. Tsurukichi Nakao, 217 Fed. 49, 133 C. C. A. 35, which has just been decided by this court.

Upon the grounds stated in the opinion in that case, the judgment of the court below is reversed, and the cause remanded to the court below, with instructions to remand the appellee to the custody of the officers from whom he was taken.

(216 Fed. 833)

EUBANK v. BRYAN COUNTY STATE BANK OF CADDO, OKL., et al.†

(Circuit Court of Appeals, Eighth Circuit. August 29, 1914.)

No. 4099.

1. BANKS AND BANKING (§ 42*)—LOANS TO DIRECTOR—LIEN ON STOCK—OKLAHOMA STATUTES.

The banking laws of Oklahoma (Rev. Laws 1910, § 262) provides that the affairs and business of any banking association organized thereunder "shall be managed or controlled by a board of directors"; by section 270 that it shall be unlawful for "any active managing officer * * * to borrow directly or indirectly money from the bank with which he is connected," and that both the officer receiving and the one making such a loan shall be deemed guilty of larceny; and by section 294 that no transfer of stock shall be valid as against the bank "where the registered holder thereof is in debt to the bank for any matured and unpaid obligation" in effect giving the bank a lien on the stock for such debt. *Held*, that a director of a bank is an "active managing officer" within the meaning of section 270 and cannot be relieved from responsibility as such by any action of the other directors, and consequently that a loan of money made by the bank to him is illegal, and the bank cannot assert a lien on his stock therefor as against a prior bona fide pledgee.

[Ed. Note.—For other cases, see Banks and Banking, Cent. Dig. §§ 50, 56–60; Dec. Dig. § 42.*

Lien of banks on stock, see note to Curtice v. Crawford County Bank, 56 C. C. A. 179.]

2. BANKS AND BANKING (§ 40*)—TRANSFERS OF STOCK—VALIDITY.

A good-faith purchaser or pledgee of the stock of a banking corporation to whom the certificates have been duly assigned and delivered is the owner in equity of such stock, though the certificates may not be transferred to him on the books as required by a by-law or rule of the corporation.

[Ed. Note.—For other cases, see Banks and Banking, Cent. Dig. §§ 49, 51–54; Dec. Dig. § 40.*]

Appeal from the District Court of the United States for the Eastern District of Oklahoma; Ralph E. Campbell, Judge.

Suit in equity by W. C. Eubank against the Bryan County State Bank of Caddo, Okl., and S. W. Maytubby. Decree for defendants, and complainant appeals. Reversed.

This suit was brought by the appellant W. C. Eubank, a citizen of Texas, against the Bryan County State Bank of Caddo, Okl., a banking corporation organized under the laws of that state, and S. W. Maytubby, as liquidating agent of said bank, as defendants, February 21, 1912, in which the appellant as plaintiff claimed as against the defendants the prior right to 80 shares of the capital stock of the bank of the par value of $100 each. The plaintiff claims such right to the stock as pledgee thereof by one H. M. Dunlap who was a director, and the president of the bank, as security for the payment of two loans of money, one of $4,000, made by plaintiff to Dunlap April 1, 1903, and one of $2,000, made February 1, 1908, and for which Dunlap made to plaintiff his two promissory notes upon said dates respectively, and assigned and delivered to him on February 1, 1908, a certificate for 50 shares of the stock of defendant bank as security for the payment of the first of said notes, and a certificate for 30 shares of such stock as security for the second loan.

The defendant bank claims the prior right to the stock under the banking laws of Oklahoma to secure an alleged indebtedness of Dunlap to the bank, who was its president and a director thereof and became indebted to it, as

*For other cases see same topic & § NUMBER in Dec. & Am. Digs. 1907 to date, & Rep'r Indexes

† Rehearing denied December 4, 1914.

it claims, when he was the owner of said stock which was never transferred to the plaintiff upon its books.

The case was heard upon an agreed statement of facts, the material portions of which are:

"That the Bryan County State Bank was organized January 27, 1908, under the banking laws of Oklahoma with a capital stock of $40,000 fully paid, and commenced business as such bank February 1, 1908; that said H. M. Dunlap was a subscriber to the capital stock of said bank, was named as one of its directors in the articles of its incorporation, was elected its first president by its board of directors, and remained such director and president until the bank went into liquidation in January, 1911.

"April 1, 1903, Dunlap borrowed from plaintiff $4,000, for which he made to plaintiff his promissory note for that amount due in one year with interest, and to secure the same assigned and transferred to plaintiff 50 shares of the capital stock of the Choctaw National Bank of Caddo, Okl., which said stock then stood in the name of Dunlap, who was also president of said Choctaw National Bank. The principal of this note was renewed from time to time by Dunlap, the last renewal maturing April 1, 1908.

"January 15, 1908, the plaintiff sent to the Choctaw National Bank the stock of that bank which he held as security for said $4,000 note, to be surrendered to Dunlap upon receipt by that bank from Dunlap of a like amount of the capital stock of the defendant bank to be held by plaintiff as security for said $4,000 note, in lieu of the stock of the Choctaw National Bank. This was done at Dunlap's request, to facilitate the liquidation of the Choctaw National Bank, and the organization of the Bryan County State Bank in lieu thereof. The change was made as requested by Dunlap, and on February 1, 1908, the organization of the defendant bank was completed and it began business. On the same day its board of directors met pursuant to the call of the president, H. M. Dunlap (who was present as one of said board), and adopted the following resolutions:

"'Resolved, that the duties of the president of this bank to be such as are defined in the banking laws of the state of Oklahoma, that he act in an advisory capacity with the other officers of such bank, and that he render every service that occurs to him for the good of such bank, and that he act generally in an advisory capacity with the other officers thereof.

"'That the duties of the first vice president of this bank be in connection with the cashier, the active management of such bank, and charge of all the details of its management; that he and the cashier together shall constitute the discount committee, and shall pass upon all loans made by the bank advising with the president when deemed necessary and subject to the supervision of the board of directors, and to preside at all meetings in the absence or disqualification of the president, and to, otherwise, in the absence of the president, perform all the duties devolving either by law or by the by-laws upon the president. * * *

"'The duties of the cashier shall be to have charge of the cash, and the details of the accounts of the bank subject to the general supervision and direction of the first vice president, as hereinbefore mentioned, and to act upon the discount committee. * * *'

"On this date said board also by its resolution gave Dunlap credit upon the books of the bank for $8,000, and this resolution was re-enacted by the board January 11, 1910.

"On the same day 50 shares of the capital stock of the bank evidenced by certificate No. 33 for 30 shares, and certificate No. 34 for 20 shares were issued in the name of Dunlap and were by him assigned and delivered to the plaintiff on said date in lieu of that of the Choctaw National Bank as security for said note of $4,000.

"February 12, 1908, Dunlap borrowed from the plaintiff the further sum of $2,400, and made to him his promissory note therefor due in one year with interest; and as security for its payment assigned to the plaintiff 30 shares of the capital stock of the defendant bank evidenced by certificate No. 1 for 20 shares, and certificate No. 2 for 10 shares, both issued to Dunlap and by him transferred and delivered to plaintiff on that date as security for said note of $2,400.

"April 1, 1908, the $4,000 note was again renewed by Dunlap to plaintiff and the time of payment thereof extended for one year, plaintiff retaining said 50 shares of the capital stock of the defendant bank as security therefor.

"July 7, 1910, Dunlap wrote to the plaintiff at Sherman, Tex., as follows:

" 'Mr. W. C. Eubank, Sherman, Texas—Dear Sir: For the purpose of facilitating a transaction of mine here, I want you to send in the stock attached to my note to you for $4,000 and transfer it to another party, have him make the proper indorsement and return to you. I should like to know that this will be agreeable to you. I would want the stock to stand just where it is on the note and the certificates sent to the bank for the proper transfer, indorsement and return to you.

" 'Yours truly, [Signed] H. M. Dunlap.'

"Pursuant to this request, plaintiff, on July 10, 1910, caused to be sent to the defendant bank through the Merchants' & Planters' National Bank of Sherman, Tex., certificates Nos. 33 and 34 of the stock of the defendant bank in a letter which reads in this way:

" 'The Merchants' and Planters' National Bank.

" 'Sherman, Texas, July 10, 1910.

" 'Bryan County State Bank, Caddo, Okla.—Gentlemen: At the request of Mr. W. C. Eubank, we inclose you certificates 33 and 34 aggregating fifty shares of your stock to be substituted in accordance with the blank instructions attached and which is to be signed by the party to whom these shares are to be transferred. The shares themselves are to be transferred in blank. Return the certificates and instructions to us after they are executed as above directed, and very much oblige.

" 'Very respectfully yours, [Signed] F. A. Batsell, Asst. Cashier.'

"On July 11, 1910, Henry W. Wells, who was then cashier of the defendant bank and who was prior thereto its assistant cashier, delivered to plaintiff 30 shares of its capital stock evidenced by certificate No. 77, and 20 shares thereof evidenced by certificate No. 78, which had been issued to said Wells in lieu of certificates Nos. 33 and 34, and by him assigned and delivered to the plaintiff as collateral security for said $4,000 note; Wells writing to the plaintiff a letter which reads as follows:

" 'July 11, 1910.

" 'Mr. W. C. Eubank, Sherman, Texas—Dear Sir: You will please hold the attached fifty shares of stock in the Bryan County State Bank as represented by certificates Nos. 77 and 78 as collateral to and subject to the terms of the $4,000 note dated April 1, 1908, due twelve months after date, to which reference is made for fuller description, given to you by H. M. Dunlap in lieu of certificates Nos. 33 and 34 for a like amount of stock in said bank which you now have and exchange for accommodation of Mr. H. M. Dunlap and myself.

" 'Yours very truly, [Signed] Henry W. Wells.'

"Said certificates Nos. 77 and 78 were received and accepted by the plaintiff in lieu of such certificates Nos. 33 and 34 for a like amount of the stock of the defendant bank.

"The stock of the defendant bank so assigned to plaintiff was never transferred to him upon the books of that bank, and the 50 shares thereof evidenced by certificates Nos. 77 and 78, which were issued to Henry W. Wells in lieu of certificates Nos. 33 and 34 at the request of Dunlap, stand upon its books in the name of said Wells, and the 30 shares evidenced by certificates Nos. 1 and 2 stand upon its books in the name of Dunlap its president; all of which certificates are in the usual form of the certificates of the capital stock of said bank; and it is agreed that Wells held said certificates Nos. 77 and 78 as trustee for Dunlap.

"On February 7, 8, and 10, 1908, Dunlap gave to the bank for money borrowed by him from it, his three notes for $2,000, $3,000, and $2,500 respectively, aggregating $7,500, and on May 8, 1908, one note for $500, amounting in all to $8,000. These notes were renewed from time to time and finally paid in full on or before October 20, 1909, except the one of February 7, 1908, for $2,000.

"November 5, 1909, Dunlap made to the bank his promissory note for $3,800, for money borrowed, from the proceeds of which the note of February 7, 1908, for $2,000 was paid.

"December 5, 1909, Dunlap gave to the bank his note for $2,000, and on January 11, 1910, another note for $2,000. These notes with the one of November 5, 1909, for $3,800 aggregating $7,800, were held by the bank and unpaid January 21, 1911, when it ceased doing business and went into liquidation; the defendant S. W. Maytubby being appointed liquidating agent, and who when this suit was commenced was settling its affairs as such liquidating agent.

"The depositors and all other creditors of the defendant bank have been paid in full.

"The assets of the bank after the payment of all its debts and liabilities are insufficient to pay its stockholders in full for the stock held by them.

"That Dunlap at all the dates herein mentioned was justly and truly indebted to the plaintiff in the full amount of said notes, and plaintiff held said shares of stock as security for the payment thereof."

It is alleged in the bill of complaint that on June 6, 1911, the defendant bank recovered judgment and decree in the district court of Bryan county, Okl., against H. M. Dunlap for $19,053.87 and costs, upon various transactions between the bank and said Dunlap in a suit in which the bank asserted, and was adjudged to have, a lien upon said certificates of stock Nos. 1, 2, 77, and 78, for the 80 shares of the capital stock of said bank in controversy herein. This is admitted by the answer. The plaintiff, however, alleges that he was not a party to that suit, knew nothing thereof while it was pending, and is not bound by its decree; and that defendant bank is not entitled to and in fact has no lien upon such stock as against him under the laws of Oklahoma.

Upon the facts as above stated, the District Court dismissed the bill upon the merits at plaintiff's costs, and awarded the stock in controversy to the defendant bank. The plaintiff appeals.

V. B. Hayes, of Durant, Okl., and McReynolds & Hay, of Sherman, Tex., for appellant.

McPherren & Cochran, of Durant, Okl., for appellees.

Before SANBORN and CARLAND, Circuit Judges, and REED, District Judge.

REED, District Judge (after stating the facts as above). [1] That the appellant (plaintiff) is a pledgee in good faith and for value of the 80 shares of the stock of the Bryan County State Bank in controversy, to secure a bona fide debt owing him by Dunlap, is not, and could not, under the foregoing facts, be successfully controverted. That fact will therefore be considered as established. Does the fact that such stock was not transferred to him upon the books of the bank deprive him of the right to participate in the final liquidation of its assets in proportion to the amount of such stock as against the other stockholders, its depositors and all creditors of the bank other than such stockholders (if they can be regarded as creditors) having been paid in full?

The provisions of the banking laws of Oklahoma bearing upon this question are (the sections referred to are those of the Revised Laws of Oklahoma 1910, Annotated):

Section 262: "The affairs and business of any banking association organized under the laws of this state shall be managed or controlled by a board of directors of not less than three nor more than thirteen in number, who shall be selected from the stockholders. * * * Any director, officer or

other person who shall participate in any violation of the laws of this state, relative to banks and banking, shall be liable for all damages which said bank, its stockholders, depositors or creditors shall sustain in consequence of such violation. The board shall select from among their number the president and secretary, and shall select from among their stockholders a cashier. Such officers shall hold their offices for a term of one year and until their successors are elected and qualified. * * * The board of directors shall hold at least two regular meetings each year, and at such meetings a thorough examination of the books, records, funds and securities held by the bank shall be made and recorded in detail upon its record book, and a certified copy thereof shall be forwarded to the bank commissioner and to each stockholder of record within ten days."

Section 264: "The violation of any of the provisions of this chapter by the officers or directors of any bank organized or existing subject to the laws of this state shall be sufficient cause to subject the said bank to be closed and liquidated by the bank commissioner and for the annulment of its charter."

Section 266: "No bank shall employ its moneys, directly or indirectly, in trade or commerce, * * * and shall not invest any of its funds in the stock of any other bank or corporation, nor make any loans or discount on the security of the shares of its own capital stock, nor be the purchaser or holder of such shares, unless such securities or purchase shall be necessary to prevent loss upon a debt previously contracted in good faith; and stock so purchased or acquired shall, within six months from the time of its purchase, be sold or disposed of at public or private sale, and after the expiration of six months any such stock shall not be considered as part of the assets of any bank. * * *"

Section 268: "The total liabilities to any bank of any person, corporation or firm, for money borrowed, including in the liabilities of such company or firm the liabilities of the several stockholders, officers or members thereof, shall not at any time exceed twenty per cent. of the capital stock of such bank. * * *"

Section 270: "It shall be unlawful for any active managing officer of any bank organized or existing under the laws of this state to borrow, directly or indirectly, money from the bank with which he is connected; and the officer making or authorizing a loan to any such person, as well as the person receiving the same, shall be deemed guilty of a larceny of the amount borrowed."

Section 273: "Every bank shall make at least four reports each year, and oftener if called upon by the bank commissioner and according to the form which may be prescribed by him, verified by the oath or affirmation of the president or cashier of such association, and attested by the signatures of at least two of the directors. * * *"

Section 282: "Every banker, officer, employé, director or agent of any bank who shall neglect to perform any duty required by this chapter, * * * shall be deemed guilty of a felony, and upon conviction thereof shall be punished by a fine not to exceed one thousand dollars, or by imprisonment * * * or by both" (as provided in this section).

Section 290: "The president and cashier of every incorporated bank shall cause to be kept at all times a correct list of the names and residences of all the shareholders in the bank and the number of shares held by each, in the office where its business is transacted. * * *"

Section 294: "The shares of stock of an incorporated bank shall be deemed personal property, and shall be transferred on the books of the bank in such manner as the by-laws therefor may direct, but no transfer of stock shall be valid against a bank or any creditor thereof so long as the registered holder thereof shall be liable as a principal debtor, surety or otherwise to the bank for any debt, nor in such cases shall any dividend, interest or profits be paid on such stock so long as such liabilities continue, but all such dividends, interests or profits shall be retained by the bank and applied to the discharge of such liabilities, and no stock shall be transferred on the books of any bank where the registered holder thereof is in debt to the bank for any matured and unpaid obligations."

Section 295: "It shall be unlawful for any bank to loan its funds to its stockholders on their stock as collateral security; and the total indebtedness of the stockholders of any bank shall at no time exceed fifty per cent. of its paid-up capital: Provided, that any bank may hold its stock to secure a debt previously contracted."

The District Court was of opinion, and so held, that Mr. Dunlap as president of the defendant bank was not an active manager thereof within the meaning of section 270 of the Oklahoma banking law, in view of the resolution of the board of directors of February 1, 1908, respecting his duties as president; and that the loan of the bank to him was not therefore within the prohibition of that statute. If the duties of Dunlap as one of the managers of the bank depended alone upon the fact that he was its president, it may be that the board of directors might prescribe and limit his duties, a question that need not now be determined, for section 262 of the Oklahoma statute imposes upon the directors of the bank, of which Dunlap was one, the positive duty of its management and control. His duties as one of the managers of the bank arose therefore from the fact that he was one of its directors, and not alone from the fact that he was its president; and these duties we think cannot be restricted or limited by any action of the board of directors. Bank v. Lanier, 11 Wall. 369, 376, 20 L. Ed. 172. Aside from this, the resolution imposes upon Dunlap as president the duty of acting in an advisory capacity with the other officers of the bank, and rendering to them "every service that occurs to him for its good." Obviously this does not limit his duties and obligations to the bank as one of its directors and managers, but rather enlarges, if anything, his duties as president of the bank.

Section 282 of the Oklahoma statute provides that "every banker, officer, employé, director or agent of a bank who shall neglect to perform any duty required by this chapter, * * * shall be deemed guilty of a felony." The duty of a director of the bank to participate in the management and control of its affairs is certainly one imposed by this statute, and the failure to perform that duty is declared by the act to be a felony punishable by fine or imprisonment, or by both.

A careful reading and consideration of the banking law of Oklahoma convinces beyond any doubt that it was its purpose to impose upon the principal officers and directors of banks organized under its provisions the positive duty of its management and control; and not that they should act as mere figureheads or dummies upon whom no responsible duty should rest. That Mr. Dunlap as president and director of this bank was its controlling spirit and was one of its active managers, sufficiently appears from the agreed facts; and that the loans made to him by the bank and for which it now asserts and claims a lien upon the stock thereof pledged to the plaintiff was in violation of the banking act of Oklahoma and unlawful. Notwithstanding this, it is contended in behalf of the bank that it may rightly enforce its debt against Dunlap as a lien upon the stock in controversy standing in his name and in the name of Wells upon its books as the registered holders thereof under section 294, above, of the Revised Laws of

Oklahoma; and National Bank v. Matthews, 98 U. S. 621, 25 L. Ed. 188, and other cases following the rule of that case are cited in support of this contention.

In National Bank v. Matthews, the bank had made a loan in good faith to Price & Co., and as security therefor had taken a mortgage upon certain real estate of Matthews. The debt not being paid at maturity, the bank was about to foreclose the mortgage to enforce the payment of the debt from the real estate covered thereby, when Matthews sought to enjoin such foreclosure upon the ground that the mortgage was void as having been made in violation of the National Bank Act. It was held by the Supreme Court that the loan having been made in good faith the taking of the mortgage as security did not invalidate the debt; that only the government could successfully challenge the validity of the mortgage and that the mortgagor could not do so. The fact that the loan of the bank was made in good faith and was not in violation of law was held an important factor in the determination of the case.

In the present case the loans by the bank to Dunlap were in direct violation of the Oklahoma bank act. Sections 266 and 294 of that act only give at most a lien to the bank upon its stock for a valid debt owing to the bank and contracted in good faith, and not for one contracted in violation of its provisions. National Bank v. Matthews and the cases following it do not, we think, sustain the contention of the bank.

[2] The present case falls within the rule that a good-faith purchaser or pledgee of the stock of a banking corporation to whom the certificates have been duly assigned and delivered is the owner in equity of such stock, though the certificates may not be transferred to him upon its books as required by a by-law or rule of the corporation. Such an entry is not for the purpose of transferring the beneficial ownership of the stock in the absence of a statute so requiring, but is for the protection of parties dealing with the bank and to enable it to know who are its stockholders entitled to vote at its meetings and to receive dividends when declared; in other words, it is intended to prescribe a method of transfer which shall be deemed effectual in all matters relating to the internal government and management of the corporation, rather than to prescribe a method of transfer which is to be observed between a stockholder and third parties. Bank v. Lanier, 11 Wall. 369, 20 L. Ed. 172; Bullard v. Bank, 18 Wall. 589, 21 L. Ed. 923; Johnston v. Laflin, 103 U. S. 800, 26 L. Ed. 532; Masury v. Arkansas Nat. Bank, 93 Fed. 603, 35 C. C. A. 476; Nicollet National Bank v. City Bank, 38 Minn. 85, 35 N. W. 577, 8 Am. St. Rep. 643. And see Ardmore State Bank v. Mason, 30 Okl. 568, 120 Pac. 1080, 39 L. R. A. (N. S.) 292; Farmers' & Merchants' Bank v. Cherokee Trust Co. et al., 32 Okl. 700, 123 Pac. 153—arising under the Oklahoma bank act now under consideration.

In Johnston v. Laflin, 103 U. S. 800, 26 L. Ed. 532, a case involving the sale of capital stock of a national bank, Mr. Justice Field speaking for the court said:

"Shares in the capital stock of associations, under the national banking law, are salable and transferable at the will of the owner. They are, in that respect, like other personal property. The statute recognizes this transferability, although it authorizes every association to prescribe the manner of their transfer. Its power in that respect, however, can only go to the extent of prescribing conditions essential to the protection of the association against fraudulent transfers, or such as may be designed to evade the just responsibility of the stockholder. It is to be exercised reasonably. Under the pretense of prescribing the manner of the transfer, the association cannot clog the transfer with useless restrictions, or make it dependent upon the consent of the directors or other stockholders. * * * The entry of the transaction on the books of the bank, where stock is sold, is required, not for the translation of the title, but for the protection of the parties and others dealing with the bank, and to enable it to know who are its stockholders, entitled to vote at their meetings and receive dividends when declared. * * * Purchasers and creditors, in the absence of other knowledge, are only bound to look to the books of registry of the bank. But as between the parties to a sale, it is enough that the certificate is delivered with authority to the purchaser, or any one he may name, to transfer it on the books of the company, and the price is paid. If a subsequent transfer of the certificate be refused by the bank, it can be compelled at the instance of either of them. * * *"

In Masury v. Arkansas National Bank, 93 Fed. 603, 35 C. C. A. 476, Judge Thayer, speaking for this court upon this same question, said:

"In a great number of cases it has been held, and such must be regarded as the prevailing rule, that such a provision (that stock in a corporation shall be transferred only on its books), when found either in a special charter or in a general incorporation act, or in the by-laws of a corporation, is intended to prescribe a method of transfer which shall be deemed effectual, as between the corporation and its stockholders, in all matters relating to the internal government and management of the corporation, rather than to prescribe a method of transfer which must be observed as between a stockholder and third parties. Notwithstanding such a provision in the charter of a corporation, a stockholder thereof may divest himself of all beneficial interest in his stock by a written assignment of the same and a delivery of his stock certificate, or by the indorsement and delivery of his stock certificate, or, as some authorities hold (Cook, Stock & S. §§ 308, 375), by the delivery of his stock certificate without indorsement, although no transfer is made on the books of the corporation. A transfer of his stock in either of the two ways first above indicated, although such transfer is not registered on the corporate books, estops the stockholder from claiming any further title to the stock so transferred, as against subsequent bona fide purchasers thereof for value"—citing a number of cases.

See, also, Nicollet National Bank v. City Bank, 38 Minn. 85, 35 N. W. 577.

Section 294 of the Revised Laws of Oklahoma plainly authorizes the sale and transfer by the owner of shares of the capital stock of a bank organized under the Oklahoma bank act. It provides, however, that they shall be transferred upon the books of the bank in such manner as its by-laws may direct; but that no stock shall be transferred on the books of the bank when the registered holder thereof is in debt to the bank for any matured and unpaid obligations (section 266) previously contracted in good faith.

If there is any by-law of the defendant bank prescribing the manner of transferring the shares of its capital stock upon its books the

agreed facts do not show it. Dunlap assigned 50 shares of the stock in controversy to the plaintiff February 1, 1908, the day the organization of the bank was completed, and on February 12, 1908, 30 shares. On these dates Dunlap made to the bank his promissory notes for $7,500; but on February 1st he was given credit upon its books by the board of directors for $8,000; and this resolution was re-enacted by the board of directors January 11, 1910, the date of the last loan made by the bank to Dunlap. What these credits were for does not appear. On May 8, 1908, he made another note to the bank for $500. These notes were all paid to the bank on or before October 20, 1909, except the one of $2,000, dated February 1st, and that was paid November 5, 1909, from the proceeds of the note of $3,800, made that date. All the notes of Dunlap so held by the bank when the stock in controversy was assigned to the plaintiff (if those of February 1st may be said to have been so held by it) were paid on or before November 5, 1909, and the notes now claimed by the bank originated on or after that date, long after the assignment of the stock to plaintiff. On this date, therefore, there was nothing to justify the bank in refusing, if it had then been requested to transfer the stock in question to the plaintiff as pledgee thereof upon its books, conceding, without admitting or holding, that the loans of the bank made to Dunlap were in good faith and not in violation of the Oklahoma bank act.

It seems incredible that Wells, the cashier of the bank, its vice president, and directors other than Dunlap, did not know of the pledge of this stock of Dunlap to the plaintiff long before the last loan was made to Dunlap; but whether or not they actually knew thereof is not important, for their duty required them to know that the loans of the bank to Dunlap as one of its directors were forbidden by the act under which the bank was organized and doing business, and that such loans were unlawful in their inception, and were not therefore in good faith. The bank and its stockholders, whose agents its managers and directors were in making these loans, cannot equitably be awarded this stock as against the plaintiff who is a good-faith holder thereof without notice of any claim or right thereto by them.

It is said that plaintiff must be presumed to know that the Oklahoma bank act gave to the bank a lien on such stock for the debt of Dunlap to it, and took the assignment of the certificates subject to the rights of the bank under such lien. Admitting that plaintiff must be presumed to know the law, he had the right to assume, and to act upon the assumption, that its directors and managers would not deliberately violate that law.

The District Court erred in dismissing the bill and awarding the stock in controversy to the bank for the benefit of its stockholders. Its decree is reversed, and the cause remanded to that court, with directions to grant the prayer of the bill and award the beneficial interest in the stock in controversy to the plaintiff, and it is ordered accordingly.

Reversed.

(216 Fed. 842)

GALBRAITH v. ROBSON-HILLIARD GROCERY CO. et al.

(Circuit Court of Appeals, Eighth Circuit. July 29, 1914.)

No. 140.

BANKRUPTCY (§ 293*)—COURTS—MORTGAGE LIEN—VALIDITY—PREFERENCES.

Where a bankrupt's trustee had possession of certain real property belonging to one of the bankrupts and located in another state, the bankruptcy court in which the proceedings were pending had exclusive jurisdiction to determine the validity of the lien of a mortgage executed by the bankrupt owner to secure a pre-existing debt of the bankrupts, which the trustee claimed was a voidable preference, and to determine such question by any mode of proceedings which, with reference to the particular case, would constitute due process of law.

[Ed. Note.—For other cases, see Bankruptcy, Cent. Dig. §§ 411, 417; Dec. Dig. § 293.*]

Petition to Revise Order of the District Court of the United States for the District of Minnesota; Page Morris, Judge.

Petition by John P. Galbraith, as trustee in bankruptcy of John Magnuson and another, doing business as John Magnuson & Co., to set aside a certain mortgage executed by John Magnuson and wife to S. Robson, to secure a pre-existing debt due from the bankrupt firm to the Robson-Hilliard Grocery Company, a Minnesota corporation. A referee's order dismissing the petition for want of jurisdiction was affirmed by the District Court, and petitioner files a petition to revise. Order and decree vacated, and cause remanded for further proceedings.

Todd & Kerr, of St. Paul, Minn., for petitioner.

Leach & Leach, of Owatonna, Minn., for respondents.

Before HOOK and CARLAND, Circuit Judges, and REED, District Judge.

CARLAND, Circuit Judge. This is a petition to revise in matter of law an order of the District Court for the District of Minnesota, affirming an order of the referee in bankruptcy made January 19, 1914, whereby he sustained objections to his jurisdiction to hear the petition of petitioner, made by counsel for respondents. The petition filed with the referee set forth the following facts: That the petitioner, John T. Galbraith, was the duly appointed, qualified, and acting trustee in bankruptcy of the estate of John Magnuson and Victor J. Magnuson, copartners as John Magnuson & Co., and as individuals. That the Robson-Hilliard Grocery Company of Pipestone, Minn., was a corporation duly organized and existing under and by virtue of the laws of the state of Minnesota. That among the assets of said estate in the possession of said John P. Galbraith, as trustee aforesaid, was the following described land lying and being in the county of Sully, state of South Dakota, to wit, "The east half of section 33, township 114, range 74 west." That heretofore, and prior to the 21st day of February, 1913, said bankrupts had purchased on open account from the said Robson-Hilliard Grocery Company goods, wares, and merchandise

*For other cases see same topic & § NUMBER in Dec. & Am. Digs. 1907 to date, & Rep'r Indexes

of the agreed value of about $1,700, which said indebtedness on said 21st day of February, 1913, was past due and wholly unsecured, and that on or about the said 21st day of February, 1913, for the purpose of securing said past due and pre-existing indebtedness, and at the solicitation and request of said Robson-Hilliard Grocery Company, and not otherwise, John Magnuson, one of said bankrupts, and wife, executed a certain mortgage covering said real estate to S. Robson, of Pipestone, Minn., which said mortgage recited a consideration of $1,-700. That said mortgage was filed for record in the office of the register of deeds in and for Sully county, S. D., on the 25th day of February, 1913, and recorded in Book 34 of Mortgages, p. 634, and that ever since said 25th day of February, 1913, said mortgage purported to constitute a lien and incumbrance against said property. That said bankrupts were wholly insolvent on February 21 and 25, 1913, and that fact on those dates was well known to said Robson-Hilliard Grocery Company, and to said S. Robson, and said Robson-Hilliard Grocery Company and said S. Robson at all of said times had reasonable cause to believe that said bankrupts and each of them were on said date wholly insolvent. That the bankrupts filed a petition in voluntary bankruptcy on April 3, 1913, both as copartners and individually, and that said bankrupts were on the 3d of April adjudicated bankrupts. That the value of the assets of said bankrupts will not pay to exceed 40 per cent. of the approved claims against the estate. That said S. Robson and the Robson-Hilliard Grocery Company claim to be owners and holders of said mortgage, and have refused to satisfy the same of record, and that the lien created by said mortgage is wholly invalid, for the same created an unlawful preference in contravention of the provisions of the Bankruptcy Law. The prayer of the petition prayed for an order of the court, citing the said S. Robson and Robson-Hilliard Grocery Company of Pipestone, Minn., to appear and show cause, if any there should be, at a time and place to be fixed by the court, why an order should not be then and there entered ordering and directing said Robson or Robson-Hilliard Grocery Company, to deliver up said mortgage to said trustee, and to execute and deliver a certificate of discharge thereof sufficient in form to properly purge the record of said register of deeds office of said purported lien and incumbrance. The referee granted an order to show cause, and at the return day thereof the Robson-Hilliard Grocery Company and S. Robson, by their counsel, appeared and objected to the matters involved in said petition being heard or determined or adjudicated in a summary manner by said referee or by said court on the ground that said court had no jurisdiction to determine the same, and that said S. Robson and the Robson-Hilliard Grocery Company did not consent to have the matters involved in said petition heard, tried, or determined in said United States District Court, in a summary manner. The referee sustained the objection of respondents, and the validity of this ruling of the referee was by a petition for review certified to the District Judge, who, upon a hearing thereof, affirmed the ruling of the referee, as hereinbefore stated. There was no question in the court below but that the real estate, upon which the lien is claimed,

was in the possession of the United States District Court for the District of Minnesota, by its trustee in bankruptcy. This fact was alleged in the petition, and the referee so certified to the judge of the District Court. While the question raised by this appeal is important, we do not think the determination thereof is difficult in view of the decisions of the Supreme Court of the United States and of this court. The United States District Court for the District of Minnesota, whose power and authority, so far as its jurisdiction existed the referee was exercising, had exclusive jurisdiction to determine the validity of the lien of the mortgage by virtue of its possession of the real estate upon which the lien was claimed. Robertson v. Howard, 229 U. S. 254, 33 Sup. Ct. 854, 57 L. Ed. 1174; Whitney v. Wenman, 198 U. S. 539, 25 Sup. Ct. 778, 49 L. Ed. 1157; Wabash Railroad v. Adelbert College, 208 U. S. 38, 28 Sup. Ct. 182, 52 L. Ed. 642, and cases cited; Herbert v. Crawford, 228 U. S. 204, 33 Sup. Ct. 484, 57 L. Ed. 800; Murphy v. Hoffman Co., 211 U. S. 563, 29 Sup. Ct. 154, 53 L. Ed. 327; Babbitt v. Dutcher, 216 U. S. 102, 30 Sup. Ct. 372, 54 L. Ed. 402, 17 Ann. Cas. 969; Bryan v. Bernheimer, 181 U. S. 188, 21 Sup. Ct. 557, 45 L. Ed. 814; United States Fidelity Co. v. Bray, 225 U. S. 205, 32 Sup. Ct. 620, 56 L. Ed. 1055.

The following language is quoted from Babbitt v. Dutcher, supra, in support of the proposition that the United States District Court for the District of Minnesota did not have jurisdiction to hear the matters arising upon the petition of the trustee:

> "There are two classes of cases arising under the act of 1898 and controlled by different principles. The first class is where there is a claim of adverse title to property of the bankrupt, based upon a transfer antedating the bankruptcy. The other class is where there is no claim of adverse title based on any transfer prior to the bankruptcy, but where the property is in the physical possession of a third party or of an agent of the bankrupt, or of an officer of a bankrupt corporation, who refuses to deliver it to the trustee in bankruptcy. In the former class of cases a plenary suit must be brought, either at law or in equity, by the trustee, in which the adverse claim of title can be tried and adjudicated. In the latter class it is not necessary to bring a plenary suit, but the bankruptcy court may act summarily and may make an order in a summary proceeding for the delivery of the property to the trustee, without the formality of a formal litigation."

Isolated paragraphs may be taken from the opinion of a court and separated from the context, may often seem to support a principle which the court, in rendering the opinion, had not in mind. The case of Babbitt v. Dutcher was as follows: The Randolph-Macon Coal Company was a Missouri corporation and was duly adjudicated a bankrupt March 26, 1907, by the United States District Court for the Eastern Division of the Eastern Judicial District of Missouri. Babbitt was appointed trustee. He made demand upon the president of the coal company for the possession of the corporation's records and stock books which were kept in the office maintained by the company in New York City. Their request was refused. Thereupon the trustee made application to the District Court in and for the Southern District of New York, by petition, for an order directing James T. Gardiner, the president, and Howard Dutcher, the secretary, of the company, or either of them, to deliver to him the stock certificate book, the cor-

poration minute book, and the stock register of said company, together with all other records and documents belonging to said company in their possession or under their control. Gardiner and Dutcher were within the jurisdiction of the District Court for the Southern District of New York, and the books and papers referred to were within their custody. Thereafter a hearing was had on the petition, and the District Judge refused to grant the order prayed for, for the reason that he had no jurisdiction to make it or to entertain proceedings instituted by a trustee in bankruptcy duly appointed in a bankruptcy proceeding pending in another district. The Supreme Court on appeal said:

"We have no doubt that the books and records in question passed, on adjudication, to the trustee, and belong in the custody of the bankruptcy court, and, there being no adverse holding, that the bankruptcy court had power upon a petition and rule to show cause to compel their delivery to the trustee. Bryan v. Bernheimer, 181 U. S. 188 [21 Sup. Ct. 557, 45 L. Ed. 814]; Mueller v. Nugent, 184 U. S. 1 [22 Sup. Ct. 269, 46 L. Ed. 405]; Louisville Trust Co. v. Comingor, 184 U. S. 18 [22 Sup. Ct. 293, 46 L. Ed. 413]; First National Bank v. Title & Trust Co., 198 U. S. 280 [25 Sup. Ct. 693, 49 L. Ed. 1051]; Whitney v. Wenman, 198 U. S. 539 [25 Sup. Ct. 778, 49 L. Ed. 1157]."

Proceeding then to the real question in the case, namely, as to whether the District Court of the United States in and for the Southern District of New York had jurisdiction to entertain this particular proceeding and grant the relief prayed for, Chief Justice Fuller used the language first above quoted.

It is clear that the learned Chief Justice had in mind, first, claims of adverse title to property of the bankrupt, based upon a transfer antedating the bankruptcy; and, second, where there is no claim of adverse title based on any transfer, prior to the bankruptcy, but where the property is in the physical possession of a third party or of an agent of the bankrupt or of an officer of a bankrupt corporation who refuses to deliver it to the trustee in bankruptcy. Now Babbitt v. Dutcher was a proceeding to obtain the possession of books and papers; hence the language used must be construed with reference to such a proceeding.

When this view is taken, the language first above quoted simply refers to cases where the bankruptcy court is seeking to obtain possession of property, and, as thus understood and interpreted, the language of course is eminently correct, but the language in no wise refers to a case where the bankruptcy court has possession of the property. In this very case of Babbitt v. Dutcher the Supreme Court decided that the District Court of the United States for the Southern District of New York had jurisdiction in the summary proceeding adopted to compel a delivery of the books and papers. In re Rathman, 183 Fed. 913, 106 C. C. A. 253, this court, by Judge Sanborn, said:

"(1) The bankruptcy court has jurisdiction to draw to itself, and to determine by summary proceedings after reasonable notice to claimants, the merits of controversies between the trustee and such claimants over liens upon and the title to property claimed by the trustee as that of the bankrupt which has been lawfully reduced to the actual possession of the trustee or of some other officer of the bankruptcy court as the property of the bankrupt. Murphy v. John Hoffman Co., 211 U. S. 562, 569, 570, 29 Sup. Ct. 154, 53 L. Ed. 327; White v. Schloerb, 178 U. S. 542, 545, 546, 548, 20 Sup. Ct.

1007, 44 L. Ed. 1183; In re Eppstein, 156 Fed. 42, 84 C. C. A. 208, 17 L. R. A. (N. S.) 465; Thomas v. Woods, 173 Fed. 585, 587, 590, 97 C. C. A. 535, 537, 540, 26 L. R. A. (N. S.) 1180 [19 Ann. Cas. 1080]; Mound Mines Co. v. Hawthorne, 173 Fed. 882, 886, 97 C. C. A. 394, 398; Goodnough Mercantile & Stock Co. v. Galloway (D. C.) 156 Fed. 504, 509; In re McMahon, 77 C. C. A. 668, 669, 671, 147 Fed. 684, 685, 687; Whitney v. Wenman, 198 U. S. 539, 549, 553, 25 Sup. Ct. 778, 49 L. Ed. 1157."

In Shea v. Lewis, 206 Fed. 877, 124 C. C. A. 537, this language was cited with approval. It is true that in both In re Rathman and Shea v. Lewis, supra, the court held that the court had no jurisdiction to entertain the proceeding in which the controversy arose, but it was based in each case upon the fact that the United States District Court of South Dakota or Minnesota did not have possession of the property involved; the same being in the possession of the owners and claimants thereof. But the question as to when the bankruptcy court could take jurisdiction by summary proceedings was involved and decided.

In T. E. Wells & Co. v. Sharp, 208 Fed. 396, 125 C. C. A. 609, this court held that the United States District Court for South Dakota had jurisdiction to proceed in a summary way to decide the validity of a lien claimed by T. E. Wells & Co. against certain property of the Plymouth Elevator Company, a bankrupt, on the ground that the T. E. Wells & Co., who had been in the possession of the property, had voluntarily delivered it to the trustee. This court decided in the same case that, if the property had remained in the possession of T. E. Wells & Co., the proceeding would rightly have been a plenary suit, but there is nothing in this case that conflicts with the general rule.

The case of In re McMahon, 147 Fed. 684, 77 C. C. A. 668, was a case in all respects similar to the one at bar, and it was there held by the Court of Appeals of the Sixth Circuit that the summary proceedings to determine the validity of the lien of a mortgage was proper.

See, also, Remington on Bankruptcy, vol. 1, § 1796; In re Noel (D. C.) 137 Fed. 694; In re Eppstein, 156 Fed. 42, 84 C. C. A. 208, 17 L. R. A. (N. S.) 465; Loeser v. Bank Co., 163 Fed. 212, 89 C. C. A. 642; In re Bacon, 210 Fed. 129, 126 C. C. A. 643; In re Granite City Bank, 137 Fed. 818, 70 C. C. A. 316.

An examination of the authorities convinces us that, in a case like the one at bar, the court, having possession of the property, has the exclusive jurisdiction to determine the validity of the lien thereon, and that it may adopt any mode of proceeding which with reference to the particular case is due process of law. The court in this case having possession of the property, it is not necessary to discuss the question as to when a court of bankruptcy may by summary proceedings obtain the possession of property belonging to the estate of the bankrupt.

The petition to revise is granted; the order and decree below is vacated and set aside, and the case remanded for further proceedings not inconsistent with the views herein expressed.

REED, District Judge (concurring). I concur in the foregoing opinion for the reason that, by the decision of the referee approved by the

judge upon petition for review, it is held in effect that the referee had no jurisdiction to require the Robson-Hilliard Grocery Company to appear and show cause why it should not be required to deliver its mortgage to the trustee and cancel the same of record. That the referee had jurisdiction (the property covered by the mortgage of the grocery company having been reduced to possession by the trustee as alleged) to make such an order upon proper notice to it and proof of the facts alleged in the petition asking for the order, I have no doubt.

The grocery company appeared in response to the notice and objected to "the matters involved in the petition of the trustee being heard or determined in a summary manner by said referee, or by said court, on the ground that said court had no jurisdiction to determine the same," and that it did not consent to have said matters so tried, heard or determined in a summary manner. The District Court filed no opinion and stated no reason for approving the order of the referee sustaining this objection. If it was sustained upon the ground that the referee had no jurisdiction or authority to require the grocery company to appear and show cause why it should not cancel and surrender its mortgage if the facts alleged in the petition were true, its ruling was error, for the referee had undoubted jurisdiction to require it to do so, if the facts alleged were true. If it was sustained upon the ground that the referee had no authority to hear and determine the alleged matter summarily, then it does not appear that the referee would have done so (admitting, for the present without deciding, that he could not rightly do so), and it should have been presumed that he would have heard and determined the matter in such manner as would accord to the parties the right to establish their respective claims in the usual course of equitable procedure, and his ruling was premature.

The grocery company should have been required, it seems to me, to answer or otherwise take issue upon the facts alleged in the petition of the trustee, and the issues so raised should have been heard and determined in such manner as would accord to the grocery company the right to show if it could do so that its mortgage, though made within the four months immediately preceding the bankruptcy, was not in fact a preference within the meaning of the bankruptcy act.

When a referee in bankruptcy may, and when he may not, determine summarily questions in bankruptcy proceedings pending before him is determined by the Supreme Court in Mueller v. Nugent, 184 U. S. 1, 22 Sup. Ct. 269, 46 L. Ed. 405, Louisville Trust Co. v. Comingor, 184 U. S. 18, 22 Sup. Ct. 293, 46 L. Ed. 413, First National Bank v. Title & Trust Co., 198 U. S. 280, 25 Sup. Ct. 693, 49 L. Ed. 1051, and other cases; and the rule held in those cases has never been departed from, so far as I can discover, but has been consistently adhered to in later cases by that court. See Collier on Bankruptcy (10th Ed., 1914) 489 et seq. That a court of bankruptcy, having the rightful custody of the bankrupt estate, has exclusive jurisdiction to determine all claims of third parties to such property is not doubted.

In Re McMahon, 147 Fed. 684, it is expressly held at page 687 of the opinion (as I read it) 77 C. C. A. 668, that the proceedings to which

McMahon was made a party to have the trust deed of the bankrupt to him canceled and set aside was not in the strict sense a summary proceeding, but was in its essence a petition to bring in persons (under section 2 [7] of the bankruptcy act [Act July 1, 1898, c. 541, 30 Stat. 545 (U. S. Comp. St. 1901, p. 3421)]), asserting liens upon the property of the bankrupt, for the purpose of determining the rights of such persons in such property, and is in substance a plenary suit; and such in effect is the nature of the proceedings here under review.

The petition to revise should be sustained, and the cause remanded to the court of bankruptcy, with directions to require the Robson-Hilliard Grocery Company to answer or otherwise take issue upon the petition of the trustee, and to proceed in such manner as will accord to the parties a full hearing and opportunity to show whether or not the mortgage of the grocery company is or is not a voidable preference under the bankruptcy act.

(216 Fed. 848)

OMAHA ELECTRIC LIGHT & POWER CO. v. CITY OF OMAHA et al.

(Circuit Court of Appeals, Eighth Circuit. May Term, 1914.)

No. 3141.

1. COURTS (§ 356*)—CIRCUIT COURTS OF APPEALS—PROCEDURE—BILL OF REVIEW.

The practice of the English Chancery Court and of the federal trial courts in equity in entertaining bills of review is not properly applicable to courts of appeal.

[Ed. Note.—For other cases, see Courts, Cent. Dig. § 937; Dec. Dig. § 356.*]

2. COURTS (§ 405*)—CIRCUIT COURTS OF APPEALS—JURISDICTION—EFFECT OF ORDER STAYING MANDATE.

By an order staying its mandate pending an appeal to the Supreme Court from its decision, a Circuit Court of Appeals retains its jurisdiction, so that a dismissal of the appeal leaves the cause still pending in that court, which may revise or change its decree, although the term at which it was entered has passed.

[Ed. Note.—For other cases, see Courts, Cent. Dig. §§ 1097–1099, 1101, 1103; Dec. Dig. § 405.*

Jurisdiction of Circuit Court of Appeals in general, see notes to Lau Ow Bew v. United States, 1 C. C. A. 6; United States Freehold Land & Emigration Co. v. Gallegos, 32 C. C. A. 475.]

3. COURTS (§ 405*)—CIRCUIT COURTS OF APPEALS—REVISAL OF DECREE AFTER TERM.

A Circuit Court of Appeals entered a decree on appeal, affirming a decree of a District Court dismissing a bill to enjoin enforcement of a city ordinance, but on the taking of an appeal to the Supreme Court entered an order staying its mandate. The appeal was dismissed by the Supreme Court for want of jurisdiction, but in the meantime another suit had been brought in the same District Court by a different plaintiff to enjoin enforcement of the same ordinance, and a similar decree had been reversed on direct appeal by the Supreme Court, which held the ordinance void and by its mandate directed a decree granting the injunction. *Held*, that a bill filed by leave in the Circuit Court of Appeals by the plaintiff in the suit there pending, designated as a "bill in the nature of a bill of review," would be treated as a petition for rehearing, and that under the

*For other cases see same topic & § NUMBER in Dec. & Am. Digs. 1907 to date, & Rep'r Indexes

circumstances the court would set aside its former decree, although the term at which it was entered had passed, and enter one in conformity with that of the Supreme Court.

[Ed. Note.—For other cases, see Courts, Cent. Dig. §§ 1097–1099, 1101, 1103; Dec. Dig. § 405.*]

4. COURTS (§ 85*)—RULES OF COURT—POWER TO DISREGARD.

A court may in an exceptional case set aside one of its rules as applicable to such case.

[Ed. Note.—For other cases, see Courts, Cent. Dig. §§ 294, 296–301; Dec. Dig. § 85.*]

Appeal from the Circuit Court of the United States for the District of Nebraska; W. H. Munger, Judge.

Suit in equity by the Omaha Electric Light & Power Company against the City of Omaha and Waldemar Michaelson. On bill in the nature of bill of review, treated as a petition for rehearing. Former decree (179 Fed. 455, 102 C. C. A. 601) set aside, and new decree entered.

See, also, 230 U. S. 123, 33 Sup. Ct. 974, 57 L. Ed. 1419.

William D. McHugh, of Omaha, Neb., for appellant.

W. C. Lambert and Benjamin S. Baker, both of Omaha, Neb. (John A. Rine and L. J. Te Poel, both of Omaha, Neb., of counsel), for appellees.

Before HOOK and SMITH, Circuit Judges, and AMIDON, District Judge.

AMIDON, District Judge. In 1884 the city of Omaha, by ordinance, granted to plaintiff a franchise empowering it to use the streets and alleys of the city for the purpose of transacting "a general electric light business." Thereafter in the progress of the art of electricity the company used its system for distributing electricity not only for lighting purposes, but also for heat and power. On the 26th of May, 1908, the city council, by resolution, directed its electrician to disconnect all wires of the plaintiff used in transmitting current for heat and power. Thereafter the plaintiff filed its bill in the United States Circuit Court for the District of Nebraska, setting up its franchise and claiming the right under it to use its system for all the purposes aforesaid, and asking a temporary injunction to restrain the enforcement of the resolution. Issue was joined, evidence taken, and a final decree entered on the 22d day of July, 1909, dismissing the bill for want of equity upon the ground that plaintiff had no right under its franchise to distribute electricity for power and heat. 172 Fed. 494. An appeal was sued out to this court, and on the 20th of April, 1910, an opinion was filed here holding that plaintiff's franchise had expired by limitation of time, and that it, therefore, had no franchise to use the streets and alleys for distributing electricity for any purpose whatsoever. 179 Fed. 455, 102 C. C. A. 601. Pursuant to this opinion a decree was entered affirming the decree of the trial court. Plaintiff sued out an appeal to the Supreme Court of the United States to review this decision, and a supersedeas was thereupon granted and an order entered staying the mandate of this court.

*For other cases see same topic & § NUMBER in Dec. & Am. Digs. 1907 to date, & Rep'r Indexes

Soon after our decision the Old Colony Trust Company, the trustee in a mortgage upon all of the Electric Light Company's property and franchises, filed a bill in equity against the same defendants in the District Court of the United States for the District of Nebraska, in which it alleged that the franchise rights of the plaintiff under the ordinance of 1884, and the practical construction placed thereon by the parties through a long course of dealing, included the right to distribute electric current for the purpose of power and heat as well as light. It specifically claimed the protection of the fourteenth amendment and the contract clause of the federal Constitution, and prayed an injunction to restrain the enforcement of the resolution above referred to as an impairment of the rights thus asserted. The city of Omaha filed its answer, denying the existence of the franchise for any purpose. The cause was submitted upon the pleadings and evidence, and a decree was entered following the decision of this court in the Electric Light Company Case, dismissing the bill for want of equity on the ground that all rights under said ordinance had expired prior to the bringing of the action. The Old Colony Trust Company appealed from this decree direct to the Supreme Court of the United States. Both appeals were heard together and opinions handed down June 16, 1913. The appeal from our decision in the Electric Light Company Case was dismissed for want of jurisdiction, because the complaint failed to raise clearly any federal question. 230 U. S. 123, 33 Sup. Ct. 974, 57 L. Ed. 1419. In the Old Colony Trust Co. Case the court held that the ordinance granted a perpetual franchise, which included the right to distribute electricity for power and heat as well as light. 230 U. S. 100, 33 Sup. Ct. 967, 57 L. Ed. 1410. A decree was entered in accordance with this opinion, reversing the decree of the District Court of Nebraska and remanding the cause to that court with directions to restrain the enforcement of the resolution.

The dismissal of the appeal from our decision leaves our decree standing, though it is in direct conflict with the decision of the Supreme Court.

Plaintiff, at the December, 1913, term of this court at St. Louis, while the stay of our mandate was still in force, presented its bill, designated "a bill in the nature of a bill of review," giving the foregoing history of the litigation, and praying for a revision of our decree, and, upon notice to defendants, moved for permission to file the same. Defendants appeared and filed written objections. The matter was fully argued, and an order entered allowing the motion and ruling the defendants to answer the bill. An answer has been filed which admits all material facts and raises only questions of law, and the case is now before us for disposition on the merits.

For the purposes of this application there is no material difference in the issue in the Electric Light Company Case, and the Old Colony Trust Company Case. The wrong in each was the threatened enforcement of the resolution. The right of the plaintiff in each was created by the ordinance granting the franchise. The resolution and ordinance were set out in full in both complaints. The controversy turned upon whether the Electric Light Company had a subsisting right under the ordinance which the enforcement of the resolution would impair. In the

Old Colony Trust Company Case the facts showing the practical construction which the parties themselves had put upon the ordinance were set forth with greater fullness than in the other case. This, however, was used by the Supreme Court, not for the purpose of creating an estoppel, but for the purpose of applying a familiar canon of construction with a view to ascertaining the true meaning of the ordinance. It is that meaning, however ascertained, which defines the right of the plaintiff in each case. The Old Colony Trust Company had no right except that which it derived from the Electric Company. The ordinance measures both. The plaintiffs are different in name, but identical in right.

In the Electric Light Company Case the trial court held that the ordinance did not grant the right to distribute current for heat and power, and dismissed the bill, thus leaving the city free to execute its resolution to cut all wires used for those purposes. We held that all rights granted by the ordinance had expired by limitation, and affirmed the decree of the trial court. The Supreme Court held in the Old Colony Trust Co. Case, that the franchise granted by the ordinance was perpetual; that it embraced the right to distribute current for heat and power, as well as light, and directed the trial court to issue an injunction to restrain the enforcement of the resolution. If we send down a mandate pursuant to our decree, we shall declare, in square conflict with the mandate of the Supreme Court, that the company has no franchise to distribute current for heat and power, and that the city has the right to cut all wires used for those purposes.

If we have the power to revise our decree and issue a mandate in harmony with that of the Supreme Court, it is plainly our duty to do so. This we should do not only to protect the rights of the plaintiff as a litigant, but as a matter of public policy to preserve the orderly administration of justice and avoid an unseemly conflict of judicial mandates.

A learned argument has been submitted by counsel dealing with bills of review in courts of chancery in this country and England. Much of this seems to us irrelevant. It has long been settled that the practice on rehearings in the English Courts of Chancery is not applicable to federal appellate courts. In Brown v. Aspden, 14 How. 25, 14 L. Ed. 311, Chief Justice Taney, speaking for the court, said:

"A motion has been made for a rehearing in this case, and we have been referred to the practice of the English Chancery Court in support of the application. The argument presupposes that this court, in cases in equity, has adopted the rules and practice of the English chancery. But this is a mistake. The English chancery is a court of original jurisdiction; and this court is sitting as an appellate tribunal. It would be impossible, from the nature and office of the two tribunals, to adopt the same rules of practice in both. * * * In the House of Lords, in England, to which the appeal lies from the Court of Chancery, a rehearing is altogether unknown. A reargument, indeed, may be ordered, if the house desires it, for its own satisfaction. But the chancery rules in relation to rehearings, in the technical sense of the word, are altogether inapplicable to the proceedings on the appeal.

"Undoubtedly this court may and would call for a reargument, where doubts are entertained which it is supposed may be removed by further discussion at the bar. And this may be done after judgment is entered, provided the order for reargument is entered at the same term. But the rule of the court is

this: That no reargument will be heard in any case after judgment is entered, unless some member of the court who concurred in the judgment afterwards doubts the correctness of his opinion, and desires a further argument on the subject. And when that happens, the court will, of its own accord, apprise the counsel of its wishes, and designate the points on which it desires to hear them.

"There is certainly nothing in the history of the English Court of Chancery to induce this court to adopt rules in relation to rearguments, analogous to the chancery practice upon applications for a rehearing. According to the general practice of that court, one rehearing, where the application has been sanctioned by the signature of two counsel, is a matter of course. And this facility in obtaining one rehearing, has naturally led to others, and in cases of interest or difficulty, two, or even three, rehearings have sometimes been allowed, under the special leave of the court, before the decree was enrolled, and, consequently, before it could be removed to the House of Lords. The natural result of this practice is to produce some degree of carelessness in the first argument, and hesitation and indecision in the court. But the great evil is in the enormous expenses occasioned by these repeated hearings, and the delays which it produces in the decision, which often prove ruinous to both parties before the final decree is pronounced. Nor is the mischief confined to the particular suit in which such proceedings and delays are permitted to take place. A multitude of others are always behind it, waiting anxiously to be heard. And the result of the practice of which we are speaking has been such that, although the court has always been filled by men of the highest order, distinguished for their learning and industry, yet the expenses and delays of the court have become a byword and reproach to the administration of justice, and Parliament has at length been compelled to interpose.

"And if this court should adopt a practice analogous to that of the English chancery, we should soon find ourselves in the same predicament; and we should be hearing over again at a second term almost all the cases which we had heard and adjudged at a former one, and upon which our own opinions would have been definitely made up upon the first argument. We deem it safer to adhere to the rule we have heretofore acted on. And no reargument will be granted in any case, unless a member of the court who concurred in the judgment desires it; and when that is the case, it will be ordered without waiting for the application of counsel."

See, also, Winchester v. Winchester, 121 Mass. 127, opinion by Chief Justice Gray, afterwards Mr. Justice Gray of the Supreme Court of the United States.

[1] If the English chancery practice as to rehearings is inapplicable in federal courts of appeal, much less could their practice as to bills of review be received. Such bills could never be entertained until after the time for filing petitions for rehearing had expired. In England that time was fixed by the enrollment of the decree. In this country, by a legal fiction, it has been held that all decrees shall be deemed to be enrolled on the last day of the term, and this fixes the point after which bills of review may be filed. By repeated decisions of the Supreme Court, however, jurisdiction of causes ends with the adjournment of the term, unless it is retained by some appropriate proceeding, and the same is true of the Circuit Courts of Appeal. In the great majority of cases the mandate has gone down transmitting the case to the trial court. It is quite clear, therefore, that a bill of review, based on the practice of the English chancery courts, and of the federal trial courts in equity, cannot properly apply to courts of appeal. There are many other features which make such bills unfit for appellate courts. When based on errors of law, they may be filed as a matter of right. They may also be filed at any time dur-

ing the period allowed for appeals, and the pendency of an appeal would in most cases toll the running of the statute. Ensminger v. Powers, 108 U. S. 292, 2 Sup. Ct. 643, 27 L. Ed. 732.

Appellate jurisdiction is exercised solely for the purpose of review. In the interest of a prompt administration of justice, causes should be retained by such courts only for a brief period. To provide against possible errors in their decisions a short time is now permitted by their rules for filing petitions for rehearing. It would be intolerable if, after causes have been fully argued and decided, and counsel have had an opportunity to call attention to any errors of fact or of law in the written opinion of the court, there could then be opened up an indefinite vista for a re-examination and revising of the decree by means of bills of review. When suits reach appellate courts their issues, both of law and fact, are usually well defined. There is ample time for the preparation of written briefs in which the case can be fully presented. There is never any occasion for the haste and lack of opportunity for investigation which sometimes lead trial courts into error. When an appellate court, after such a presentation, has fully considered a case, and reduced its conclusions to a written opinion, and counsel have had an opportunity to point out any mistakes in the opinion, by petition for rehearing, the result must be held to be as free from error as any human action can be. The evils that would accrue from applying to such judgments the doctrines of bills of review in chancery are manifest and intolerable.

In Southard v. Russell, 16 How. 547, 569 (14 L. Ed. 1052), the Supreme Court said:

> "The better opinion is that a bill of review will not lie at all for errors of law alleged on the face of the decree after the judgment of the appellate court."

The same view is expressed by Story in his Equity Pleading, § 408. See, also, Nashua & L. R. Co., 169 Mass. 157, 47 N. E. 606, 608; Street's Federal Equity Practice, § 2178.

After the decision on appeal and the remanding of the case to the trial court, a bill of review may be filed on the ground of newly discovered evidence. In order to prevent a conflict of jurisdiction, however, it is necessary in such a case to first obtain the consent of the appellate court whose judgment is to be reviewed. Southard v. Russell, 16 How. 547, 14 L. Ed. 1052; Keith v. Alger, 124 Fed. 32, 59 C. C. A. 552. Such a bill does not seek a revising of the decree, but proceeds to a new decree upon new evidence.

In Kimberly v. Arms (C. C.) 40 Fed. 548, it is said that application was made to the Supreme Court "for leave to file bills of review for alleged errors in the judgments or decrees" in Bently v. Coyne, 4 Wall. 509, 18 L. Ed. 457, and Rubber Co. v. Goodyear, 9 Wall. 805, 19 L. Ed. 828. An examination of these cases leaves no doubt that both bills were based upon newly discovered evidence rather than error apparent. The case of Bently v. Coyne, 4 Wall. 509, 18 L. Ed. 457, is a mistaken citation. The case to which the court intended to refer is the next one in the report, Purcell v. Miner, in which the petition for rehearing is considered at 4 Wall. 519, 18 L. Ed. 459.

Both our power and practice, therefore, on the present application, must be found, not in the practice of trial courts on rehearings or bills of review, but in the rules and decisions of appellate courts defining their practice as to the re-examination of their own decrees. For a new case analogies may be found in the former field, but not rules. Notwithstanding the naming of the application as "a bill in the nature of a bill of review," we must treat it simply as a petition for rehearing.

The term at which our decree was entered has been adjourned, and several other terms have intervened. It is urged that this deprives us of jurisdiction to grant a rehearing. The Supreme Court has frequently stated in unqualified language that it has no power to review its judgments or decrees after adjournment of the term. Brown v. Aspden, 14 How. 25, 14 L. Ed. 311; Brooks v. Railroad Co., 102 U. S. 107, 26 L. Ed. 91; United States v. Knight, 1 Black, 488, 17 L. Ed. 80; Public Schools v. Walker, 9 Wall. 603, 19 L. Ed. 650; Bushnell v. Crooke Mining & Smelting Co., 150 U. S. 82, 14 Sup. Ct. 2, 37 L. Ed. 1007. In 1884 this was embodied in rule 30 of the Court, 108 U. S. 591, 32 Sup. Ct. xii. That court has also stated quite as frequently that it cannot grant a rehearing after its mandate has gone down. Sibbald v. United States, 12 Pet. 488, 9 L. Ed. 1167; Noonan v. Bradley, 12 Wall. 121, 125, 20 L. Ed. 279; Browder v. McArthur, 7 Wheat, 58, 5 L. Ed. 397; Peck v. Sanderson, 18 How. 42, 15 L. Ed. 262; Washington Bridge Co. v. Stewart, 3 How. 413, 11 L. Ed. 658; Kingsbury v. Buckner, 134 U. S. 650, 671, 10 Sup. Ct. 638, 33 L. Ed. 1047; Hudson v. Guestier, 7 Cranch, 1, 3 L. Ed. 249. In all of the foregoing cases both events had occurred at the time the petition for rehearing was presented. The term had adjourned and the mandate had gone down. At that time mandates were never sent down during the term, except on motion and special order. At the adjournment of the term, mandates were issued in all cases decided, unless motion for rehearing had been filed. Blatchford's Rules of United States Courts, 183. The adjournment of the term and the going down of the mandate being contemporary events, the court never had occasion to consider the effect of staying its mandate alone. In 1895 rule 39 was adopted, which reads as follows:

> "Mandates shall issue as of course after the expiration of thirty days from the day the judgment or decree is entered, unless the time is enlarged by order of the court, or of a justice thereof, when the court is not in session, but during the term." 159 U. S. 709, 32 Sup. Ct. xiv.

The year following, in Bank of Commerce v. Tennessee, 163 U. S. 416, 16 Sup. Ct. 1113, 41 L. Ed. 211, a mandate was recalled, petition for rehearing granted, and the decree revised. It is manifest, therefore, that at the present time the going down of the mandate does not divest the court of power to grant a rehearing.

Being a court of final resort the Supreme Court has never had occasion to stay its mandate during the pendency of an appeal. Its stays have been confined entirely to petitions for rehearing. Neither its decisions nor its rules can, therefore, control us as an intermediate court in meeting the precise question raised by this application.

[2] That question is: What effect does the order staying our mandate have upon our jurisdiction to entertain a motion for rehearing? The exact question was before the Circuit Court of Appeals of the First Circuit in Burget v. Robinson, 123 Fed. 262, 59 C. C. A. 260, and is answered in an able opinion by Judge Putnam. The jurisdiction is there sustained upon grounds which seem to us sound.

It is a universal rule that the perfecting of an appeal transfers the cause to the appellate court, and that it remains there until it is remitted to the trial court by the sending down of the mandate. Credit Co. v. Ark. Cen. Ry. Co., 128 U. S. 258, 9 Sup. Ct. 107, 32 L. Ed. 448; Lockman v. Lang, 132 Fed. 1, 65 C. C. A. 621; Thomas v. Thomas, 27 Okl. 784, 113 Pac. 1058, 35 L. R. A. (N. S.) 124, 133, Ann. Cas. 1912C, 713; Aspen Smelting Co. v. Billings, 150 U. S. 31, 36, 14 Sup. Ct. 4, 37 L. Ed. 986; Ott v. Boring, 131 Wis. 472, 111 N. W. 833, 11 Ann. Cas. 857; In re Jessup's Estate, 81 Cal. 408, 22 Pac. 1028, 1031, 6 L. R. A. 591. An order staying the mandate is similar in its jurisdictional effect to the order of a trial court permitting the filing of a motion for a new trial. Such an order tolls the running of the statute limiting the time for taking out a writ of error, and retains the court's control of its judgment notwithstanding the adjournment of the term. Kingman v. Western Mfg. Co., 170 U. S. 675, 678, 680, 18 Sup. Ct. 786, 42 L. Ed. 1192; Burget v. Robinson, 123 Fed. 262, 59 C. C. A. 260.

The jurisdiction of an appellate court differs radically from that of a trial court. It exists solely for the purpose of review. As soon as that is finished the suit is remitted to the trial court. Retention of the cause affords the strongest evidence that in the judgment of the court its work is not complete or any action taken final. To be sure, the object we had in mind at the time of staying the mandate was to await the action of the Supreme Court. Our jurisdiction, however, was not confined by such intention. So long as we retained the cause, it was subject to our full appellate power, including the correction of our decree.

[3] The cause is, therefore, still pending in this court. What we will do with the present application is not a matter of jurisdiction, but a matter of sound practice.

We stayed our mandate to await the directions of the Supreme Court in regard to our decree. Because the plaintiff failed to clearly claim the protection of the federal Constitution, that court was without jurisdiction to give its direction in this suit; but in another suit, involving the same ordinance and resolution, brought against the same defendants by a plaintiff which derives all its rights from the plaintiff in the present suit, that court has spoken its directions. While no mandate can run from its decision to our decree, a mandate of judicial authority does run from it, which we ought not to disregard. We entered our stay for the purpose of determining what mandate should be issued. In the meantime the Supreme Court has issued its mandate to the District Court of Nebraska declaring that the ordinance confers a perpetual franchise upon the plaintiff, and authorizes it to distribute current for heat and power, as well as light, and directs that

court to issue an injunction restraining the city from interfering with those rights. We must now decide what mandate we will issue to the same court. Shall we declare, in direct contravention of the mandate of the Supreme Court, that plaintiff's franchise has terminated, and that it has no right to distribute current for any purpose, and authorize the city authorities to cut its wires and destroy its business? What would be the duty of the trial court, if we were to issue such a mandate? Certainly our duty is plain. We ought to harmonize our decree and mandate with those of the Supreme Court.

Our attention is called to our rule which limits the time to present petitions for rehearing to 60 days from the date of the judgment or decree. In our opinion that rule was not intended to control such a case as the one with which we are now dealing. It was intended to prescribe the practice as to matters which are in existence at the time when a decree is entered. It is entirely plain that if the decision of the Supreme Court had been rendered before our decree, our decree would have been different. Applying the analogies of Lord Bacon's first ordinance in regard to bills of review, that decision constitutes new matter which hath arisen since the decree. In fact, it is precisely the kind of new matter which the chancellor had in mind in framing the second clause of his ordinance. This is plain from his sixth ordinance, which reads as follows:

"No decree shall be made upon pretense of equity against the express provision of an act of Parliament. Nevertheless, if the construction of such act of Parliament hath for a time gone one way in general opinion and reputation, and after, by a later judgment, hath been controlled, then relief may be given upon matter of equity for cases arising before the said judgment, because the subject was in no default."

The "later judgment" here referred to would seem to be at least one form of "new matter" arising after the decree referred to in the first ordinance. See, also, Jopp v. Wood, 2 DeG. J. & S., 323.

[4] Furthermore, the case is so exceptional that we would be justified under the decisions of the Supreme Court in setting aside our rule if it were applicable to the case. Poultney v. City of LaFayette, 12 Pet. 472, 9 L. Ed. 1161; United States v. Breitling, 20 How. 252, 9 L. Ed. 900; Burget v. Robinson, 123 Fed. 262, 59 C. C. A. 260.

It is also urged that a variance in judicial decisions is not a sufficient cause to justify us in disturbing our decree. Tilgham v. Werk (C. C.) 39 Fed. 680, and Hoffman v. Knox, 50 Fed. 484, 1 C. C. A. 535, are said to support this contention. If there was no change in the situation of the parties after the entering of the decree in the first case cited, so as to make a revision of the decree inequitable, we should have thought a bill of review would have properly lain in that case after the decision of the Supreme Court of the United States in Tilghman v. Proctor, 102 U. S. 707, 26 L. Ed. 279. As to the second case cited, there had been such a radical change in the situation of the parties since the rendering of the decree as made the bill of review inequitable. The first decree had been executed by sale of the property involved, and the rights of the third parties had intervened. Furthermore, the plaintiff in that suit asked only a partial revision of

the decree seeking thereby to have all that part of it which would be beneficial to him retained, and to destroy the part under which innocent third parties had acquired rights. Neither of the cases cited presented a situation similar to that with which we are now dealing.

The judgment entered herein, therefore, on the 20th day of April, 1910, is hereby vacated and set aside, and on the authority of the decision of the Supreme Court in the Old Colony Trust Company Case a decree will be entered reversing the decree of the lower court with direction to enter a decree against the enforcement of the resolution of 1908, in accordance with said opinion of the Supreme Court.

(216 Fed. 857)

UNITED STATES GYPSUM CO. v. KARNACA.

(Circuit Court of Appeals, Eighth Circuit. July 29, 1914.)

No. 4096.

1. MASTER AND SERVANT (§ 121*)—PLACES TO WORK—STATUTE REQUIRING GUARDING OF MACHINERY.

Code Supp. 1907, Iowa, § 4999a2, which makes it the duty of the owner of any manufacturing or other establishment where machinery is used, among other things, to properly guard "machinery of every description," as construed by the Supreme Court of the state, is intended to require the guarding of all machines of a character dangerous to employés operating them or working in their vicinity.

[Ed. Note.—For other cases, see Master and Servant, Cent. Dig. §§ 228–231; Dec. Dig. § 121.*]

2. MASTER AND SERVANT (§ 289*)—ACTION FOR INJURY TO SERVANT—QUESTIONS FOR JURY.

Evidence considered, and *held* not sufficient to establish the contributory negligence as a matter of law of an employé in a gypsum mill, who was injured by a revolving screw, used to force gypsum through a conveyor, and which was left unguarded through the employer's negligence.

[Ed. Note.—For other cases, see Master and Servant, Cent. Dig. §§ 1089, 1090, 1092–1132; Dec. Dig. § 289.*]

In Error to the District Court of the United States for the Northern District of Iowa; Henry T. Reed, Judge.

Action at law by Peter Karnaca against the United States Gypsum Company. Judgment for plaintiff, and defendant brings error. Affirmed.

Fred J. Dawley, of Cedar Rapids, Iowa (Dawley, Jordan & Dawley, of Cedar Rapids, Iowa, on the brief), for plaintiff in error.

B. J. Price, of Ft. Dodge, Iowa (M. M. Joyce, of Ft. Dodge, Iowa, on the brief), for defendant in error.

Before SANBORN and CARLAND, Circuit Judges.

CARLAND, Circuit Judge. This action was brought by Karnaca to recover damages from the Gypsum Company for a personal injury he received while in its employ, and which as he alleges was caused by the negligence of the company. He recovered a verdict. The company brings the case here, assigning as error the ruling of the trial court

*For other cases see same topic & § NUMBER in Dec. & Am. Digs. 1907 to date. & Rep'r Indexes

refusing to direct a verdict in its favor. The company has specified the particulars in which the evidence was insufficient to sustain a verdict as follows: (1) There was no evidence for the jury that the company was negligent. (2) There was no evidence for the jury that the machinery on which Karnaca was injured was of a such a dangerous character as to require a guard. (3) There was no evidence for the jury that it was practicable to guard the conveyor without interfering with the operation thereof. (4) The evidence showed Karnaca to have been guilty of contributory negligence. Karnaca specified in his complaint as acts of negligence: (1) Failure to use ordinary care to furnish him with a reasonably safe place to work. (2) Failure to use ordinary care to furnish him with proper tools and appliances to remove the clogged gypsum without being compelled to place his hands in close proximity to the unguarded revolving conveyer screw. Under specification 1, Karnaca mentioned the failure to properly guard the conveyer screw as provided by section 4999a2, Supplement, Iowa Code. (3) In permitting an obstruction to remain over and across the door of bin No. 5, thereby causing Karnaca to place his hands near the conveyer screw. (4) Failure to warn Karnaca of the dangers of his employment.

[1] Section 4999a2, reads as follows:

"It shall be the duty of the owner, agent, superintendent or other person having charge of any manufacturing or other establishment where machinery is used, to furnish and supply or cause to be furnished and supplied therein, belt shifters or other safe mechanical contrivances for the purpose of throwing belts on and off pulleys, and, wherever possible, machinery therein shall be provided with loose pulleys; all saws, planers, cogs, gearing, belting, shafting, set screws and machinery of every description therein shall be properly guarded."

In construing this statute the Supreme Court of Iowa, in McCarney v. Bettendorf, 156 Iowa, 418, 136 N. W. 920, said:

"Enough has been said to indicate the reasons for our conclusion that the clause 'machinery of every description' should not be restricted to the kinds or class particularly mentioned, but given the broad construction, evidently intended by the Legislature, as meaning all machines of a character dangerous to employés operating them or working in their vicinity. Machines, or parts likely, if unguarded, to injure those operating or coming in contact with them, are particularly mentioned, and directed to be 'properly guarded,' and by 'machinery of every description' the Legislature undoubtedly intended machinery not specifically enumerated, but which might reasonably be anticipated to cause injury unless provided with appropriate guards. See Kimmerle v. Dubuque Altar Mfg. Co. [154 Iowa, 42], 134 N. W. 434: As everyone knows, a large percentage of machinery requires no shield against danger to workmen operating or near it, and this, as plainly appears from the statute when construed as a whole, was not contemplated by the Legislature. When a machine, or machinery, however, is proven to be of a character such that injury therefrom to employés operating or near it is reasonably to be apprehended, then the statute exacting proper guards is as mandatory as though it had been particularly mentioned therein."

The court in the above case cited with approval the case of U. S. Cement Co. v. Cooper, 172 Ind. 599, 88 N. E. 69. The Indiana statute reads:

"All vats, pans, saws, planers, cogs, gearing, belting, shafting, set screws and machinery of every description therein shall be properly guarded."

The Supreme Court of Indiana in construing this statute said:

"Considering the general purpose of the legislation, as distinctly shown by the various provisions of the act, it becomes plain that the design of the lawmakers was the selection of certain manufacturing instrumentalities, generally known to be dangerous, and susceptible of being guarded without impairing their usefulness, and the imposition upon masters of the general duty of properly guarding all such instrumentalities, on the penalty that failure to do so should be accounted negligence per se. While the great body or mass of machinery usually assembled in important manufacturing establishments—too multiform and diversified for classification or just control by fixed rules of law—should be understood as being within the scope and meaning of the general words, 'and machinery of every description therein' shall be guarded, this distinction, however, in the rules applicable to objects within the purview of the general words, is manifest. The failure to guard all machinery is not negligence per se. When a machine, or some part of a machine, is not of a dangerous character, or is so located as not to imperil workmen when in the place, or places, to which their duties call them, or where guarding or fencing is impracticable without materially impairing the use, the same need not be guarded."

The trial court in the case at bar told the jury that the statute of Iowa required the revolving screw which injured Karnaca to be guarded. Whether it appeared that the machinery was so clearly dangerous as to allow the court to say that it was within the statute (Kimmerle v. Dubuque Altar Mfg. Co., 154 Iowa, 42, 134 N. W. 434), we may not consider, as there was no exception or complaint made when the court so charged.

Chapter 219, Acts 33d General Assembly of Iowa, provides:

"That in all cases where the property, works, machinery, or appliances of an employer are defective or out of repair, and where it is the duty of the employer from the character of the place, work, machinery or appliances to furnish reasonably safe machinery, appliances or place to work, the employé shall not be deemed to have assumed the risk by continuing in the prosecution of the work, growing out of any defect as aforesaid, of which the employé may have had knowledge when the employer had knowledge of such defect, except when in the usual and ordinary course of his employment it is the duty of such employé to make the repairs, or remedy the defects. Nor shall the employé under such conditions be deemed to have waived the negligence, if any, unless the danger be imminent and to such extent that a reasonably prudent person would not have continued in the prosecution of the work; but this statute shall not be construed so as to include such risks as are incident to the employment."

The law and the issues being as stated, it simply remains to consider whether there was evidence to sustain a verdict for Karnaca in the particulars specified. We are justified in saying that there was no evidence to sustain a recovery on the ground that the company had not used ordinary care in providing Karnaca with reasonably safe tools and appliances with which to perform his work. Counsel for Karnaca practically concede this in their brief. The question was submitted to the jury, however, by the court, but no complaint is made of this anywhere. If there was evidence to go to the jury on any alleged act of negligence, it was not error to overrule the motion for a directed verdict. In order to have brought this question before us for review, there ought to have been a motion to direct a verdict upon this particular cause of action—none such was made. There was conflicting evidence as to what the company did in warning Karnaca of the dangers of his

service. Beside stating that this was one of Karnaca's alleged acts of negligence on the part of the company the court said nothing about it to the jury. No complaint, however, of this is made. There was evidence to go to the jury that the screw conveyer was of such a character that injury therefrom to employés near it would be reasonably apprehended. As before stated, the court decided this question, and no complaint of that decision is made. The claim that there was no evidence that it was practicable to guard the conveyer without interfering with the operation thereof is not sustained by the record. Mr. Butler, superintendent of the Gypsum Company, called by Karnaca, testified upon this subject as follows:

"Q. If the men properly regulated the flow of the gypsum by means of these slides, as they do now, the presence of the screen over the conveyer would not in any way tend to retard the flow of the gypsum, would it? A. Some kind of a screen would; a real fine screen would. Q. Will a coarse screen? A. It wouldn't; no, sir.

"By the Court: Q. A coarse screen would not? A. No, sir."

[2] It necessarily results from what we have said that there was evidence that the defendant was negligent. There was no pretense that any guard had been placed over the conveyer screw for the purpose of protecting employés. It only remains to consider the question as to whether the testimony so clearly showed that Karnaca was guilty of contributory negligence that a verdict for him could not be sustained. The burden of showing that Karnaca was negligent was upon the company, unless it appeared from Karnaca's own evidence, and the court in order to have directed a verdict for the company on that ground, as matter of law, would have had to decide that all reasonable men upon the facts shown would say that Karnaca was negligent. It now appears that 12 men, presumably reasonable, united in finding to the contrary. In order to discuss this question a short statement of the case is necessary.

The Gypsum Company is engaged in the manufacturing of gypsum products near Ft. Dodge, Iowa. Karnaca was employed by it about July, 1912, and on September 11th of the same year received the injury of which he complains, in what is known as the Mineral City Mill. In this mill there were six kettles for boiling the moisture out of gypsum plaster. When the plaster is boiled sufficiently it is dumped into bins. This is done by opening a gate that is on a level with the bottom of the kettle. The bins are shaped like an inverted "A." They were of about 18 tons capacity. When the plaster is first dumped from the kettle to the bin, it has a temperature of about 330 degrees Fahrenheit, and is of the consistency of hot water. The plaster passes from the bins to a conveyer box through doors located at the bottom of the bins, and then is conveyed by the operation of a screw conveyer to an elevator. The conveyer box is 16 inches wide and 24 inches deep, with flat bottom and no cover or top. Inside of the conveyer box is a conveyer screw 9 inches in diameter and 28 inches in circumference. The screw is about six inches from the bottom of the conveyer box and the box is about 60 feet in length. The screw revolves at the rate of 80 revolutions per minute. The doors or gates at the bottom of the bin through which the gypsum passes are about 6 inches by 12 inches. The top of the

outside of the conveyer box is about 4½ feet from the floor and came up to about the shoulders of Karnaca. The doors in the bins are opened and closed by a sliding door, raised or lowered by the men operating same, either with their hands or by means of an iron bar. In drawing a line from the top of the conveyer box straight across horizontally to the bin, it would strike a little below the top of the door. There is a tendency for the hot fluid gypsum to cake or bake when dropped into these bins after it becomes cool. If the gypsum clogged in front of any one of the doors in the bins, the elevator man's duty was to loosen it up with the bar, which was furnished by the Gypsum Company. Karnaca was an elevator man, and this was a part of his duty at the time of the accident. This iron bar was about 5 or 6 feet in length and of half-inch pipe. The end that went into the bin was crimped shut. The bar was curved, but was made of light material so that you could straighten it if desired. As a general thing it would be curved. If the gypsum clogged it was easier and safer to get at it with a curved bar than with a straight bar. The bar would be inserted in the sliding door. The clogs or jams of the gypsum would sometimes be three or four feet up in the bins from the door. The colder the gypsum became the harder it packed. The conveyer screw runs all the time when the mill runs, so that whenever a person would be poking these clogs the conveyer screw would be in motion in front of him all the time. Some time before the day of the accident, the company had attempted to have the gypsum pass automatically from the bins into the conveyer box, and to that end had covered the conveyer box, and as a part of this scheme there was a plate placed in front of the bin door. It covered up part of the opening. The object of this experiment as claimed by the company was to save the expense of elevator men, but it was found impracticable, and the cover was taken off the conveyer box, but on some of the doors of the bins the plates remained. The plate remained at bin No. 5 where Karnaca was injured. There were holes in the plate top and bottom for inserting the iron bar to loosen the gypsum when it became clogged. It is the claim of the company that the length of the bar with which Karnaca was furnished permitted him, at all times, to poke the clogged gypsum without having his hands over the conveyer box or near the conveyer screw. Karnaca was not attempting to raise or lower any bin door with his hand when he was injured. He testified:

"I put the bar in as far as I could put it, and at those doors where there was no plate my hand would come right over the conveyer. At the time I was hurt I was using that pipe, cleaning with it. I was working on the third hole in bin No. 5. I put the bar in from the bottom underneath the plate, because the gypsum was stuck on the bottom. It was stuck or clogged at a point below the hole in the top of the plate. When it didn't block on the bottom, I used it on top. I took hold of the bar with my right hand in front and the left hand behind. I started to poke from the bottom and the conveyer caught my glove or the sleeve and just took my hand in there and then it cut my fingers off."

It is plain that the farther the iron bar was inserted in the bin for the purpose of breaking up the gypsum, the nearer the elevator man's hands would come to the conveyer screw, that is, they would be over the conveyer screw. The conveyer box was 24 inches deep, the diameter of the screw was 9 inches, and the distance from the bottom of

the screw to the bottom of the conveyer box was 6 inches. This would leave a space of 9 inches above the screw to the level of the top of the conveyer box. The side of the bin next to the conveyer box constituted the inside of the conveyer box, so that there was nothing to prevent the iron bar if it was inserted in the bin so as to come within the top opening of the conveyer box from getting down into the conveyer screw, which might have been possible if the elevator man was trying to reach clogged gypsum three or four feet up in the bin, and the testimony shows that it sometimes clogged as high as that.

There may be evidence appearing in this statement of the case which would sustain a verdict that Karnaca was negligent, but it does not present a case where the court can say as matter of law that he was. In order to do so we should have to decide that all reasonable men would say upon the facts stated that Karnaca could not have received his injury without he either deliberately or carelessly placed his hand so as to be caught by the conveyer screw. We think it was a question for the jury, and that their verdict must stand.

Judgment affirmed.

(216 Fed. 862)

STERNE v. MERCHANTS' NAT. BANK.

In re TAYLOR GRAIN CO.

(Circuit Court of Appeals, Eighth Circuit. August 20, 1914.)

No. 3949.

1. BANKRUPTCY (§ 345*)—LIENS—CONFLICTING CLAIMS UNDER MORTGAGE.

Bankrupt corporation made an issue of $75,000 of bonds secured by mortgage on its property, all of which it delivered to a bank as security for present and future indebtedness. Later it made a new issue of $125,000 to take up the first and other indebtedness, and its president took them to New York to negotiate. It then owed the bank $55,000, and with the bank's consent one of the first bonds of $15,000 was canceled and an indorsement of $5,000 made on another to show the true amount due thereon, and also, with the bank's consent, the president took such bonds with him; the uncanceled portion to be paid from the proceeds of the new issue. Having failed to effect a sale of the latter, the old bonds were returned to the bank, except the canceled one, which, without the first bank's knowledge, was pledged to intervener bank in lieu of other security which it then held, with the explanation that it had been canceled without authority. After the bankruptcy the mortgaged property was sold, and did not realize enough, after satisfying prior incumbrances, to pay the claim of the first bank. *Held*, that such bank was entitled to the entire security of the mortgage, and had not intentionally relinquished its right thereto; that intervener, which was put on notice by the condition of the canceled bond when it took the same and made no inquiries, was not an innocent purchaser, nor entitled to share in the proceeds of the mortgaged property.

[Ed. Note.—For other cases, see Bankruptcy, Cent. Dig. §§ 531, 532, 534, 539, 540; Dec. Dig. § 345.*]

2. BANKRUPTCY (§ 455*)—APPELLATE PROCEEDINGS—MODE OF REVIEW.

An order of a court of bankruptcy allowing a claim of $500 or more as a secured claim, although it incidentally affects other liens on the same

*For other cases see same topic & § NUMBER in Dec. & Am. Digs. 1907 to date, & Rep'r Indexes

property, is reviewable by appeal under Bankr. Act July 1, 1898, c. 541, § 25a, 30 Stat. 553 (U. S. Comp. St. 1901, p. 3432).

[Ed. Note.—For other cases, see Bankruptcy, Cent. Dig. § 916; Dec. Dig. § 455.*

Appeal and review in bankruptcy cases, see note to In re Eggert, 43 C. C. A. 9.]

Appeal from the District Court of the United States for the District of Kansas; John C. Pollock, Judge.

In the matter of the Taylor Grain Company, bankrupt. Appeal by W. E. Sterne, trustee, from an order allowing the claim of the Merchants' National Bank, intervener, as a preferred claim. Reversed.

The Merchants' National Bank of Topeka, Kan., presented a demand for an allowance as a secured claim against the estate of the Taylor Grain Company, in bankruptcy, praying that the same be paid in full out of the proceeds of sale of certain mortgaged property. The court had before that time made an order requiring the bank to present its claim within the time prescribed by law, and, because of its failure to do so, the referee refused to allow it at all, and, on a petition for review, the District Judge set aside the order of the referee and directed him to proceed to hear the claim of the bank on its merits. After a full hearing the referee disallowed the claim as a secured claim, and the District Judge, on another petition for review, reversed the judgment of the referee and ordered him to allow the demand of the bank as a secured claim, and directed its payment in full out of the fund in the possession of the trustee arising from the sale of the mortgaged property. From this last-mentioned order the trustee of the estate in bankruptcy prosecutes an appeal to this court.

The record before us consists of the final report of the referee disallowing the claim of the bank, the petition for review of that action, the order of the District Judge sustaining that petition and directing the referee to allow the claim, together with the opinion of the District Judge. Much evidence appears to have been taken by the referee, but none of it is brought here for our consideration. We must therefore determine the case on the facts found and stated by the referee. They are as follows:

Prior to November 1, 1904, the Taylor Grain Company had executed two mortgages conveying its real estate to secure the payment of (1) an indebtedness of $12,000, due to one French, and (2) an indebtedness of $10,000, due to the bank of Topeka, and on that day it executed another or third mortgage conveying the same property to a trustee to secure the payment of an issue of bonds aggregating the sum of $75,000, then executed by it, payable to the order of Davis, Welcome & Co., and by the latter indorsed in blank. All of these last-mentioned bonds were delivered to the Bank of Topeka as security for the payment of money then due or thereafter to become due from the grain company to that bank. In the summer of 1905 the total amount of that indebtedness was found to be $55,000. The grain company then executed another or fourth mortgage conveying the same real estate to a trustee to secure the payment of an issue of

*For other cases see same topic & § NUMBER in Dec. & Am. Digs. 1907 to date, & Rep'r Indexes

$125,000 in bonds. Soon afterwards the grain company borrowed $2,100 from the Merchants' National Bank, appellee herein, pledging, as security for its payment, some of the bonds of the last-mentioned, or $125,000, issue. The purpose of the grain company was to sell this issue of bonds, and with the proceeds pay off all prior mortgage indebtedness, and thereby constitute that issue a first lien upon its property. This purpose was made known to the president of the Merchants' National Bank, and he was also advised by the officers of the grain company that they hoped to sell the bonds in New York, and, as soon as they could do so, that bank could forward its bonds to New York and receive the $2,100 so borrowed. The president of the grain company went to New York for the purpose of negotiating a sale of the bonds. In order to do so it became necessary to make a showing that that issue constituted a first lien upon the property. He accordingly took with him an abstract and proper receipts and releases of the debts secured by the two first-mentioned mortgages, and also the entire issue of $75,000 of bonds, so that they might be canceled in partial satisfaction of the purchase price of the new issue. One of these bonds for $15,000, known as bond No. 7, had been canceled while in the possession of the Bank of Topeka, and had been so marked on its face, and on another of the bonds payment of $5,000 had been indorsed, thereby reducing the amount secured by the mortgage of November 1, 1904, to $55,000, the exact amount of the then existing debt of the bankrupt company to the Bank of Topeka. That bank had consented to this cancellation and indorsement for the purpose of enabling the officers of the grain company to make a showing that the proceeds of sale of the bonds would be sufficient to pay off its indebtedness and secure a release of all prior incumbrances. Some objection was found to the terms and provisions of the mortgage, and for that reason the grain company was unable to make the sale, and concluded to make another mortgage containing satisfactory terms and provisions, to secure another issue of bonds and make another attempt to sell that issue. To accomplish this it became necessary to take up the few outstanding bonds of the prior issue pledged to the Merchants' National Bank. The president of the grain company, who then had in his possession bond No. 7, canceled for the purposes above specified, took it to the Merchants' National Bank and explained to its officers that, by reason of some dissatisfaction with the provisions of the mortgage, the $125,000 issue of bonds could not be sold, and that a new issue and a new mortgage were necessary, and that, in order to cancel the old issue, it became necessary to get possession of the few bonds held by their bank, and offered to deliver to the latter bank bond No. 7 as a substitute for the bonds then held by it as security for its debt of $2,100. The officers of the bank, upon inspection of that bond, called attention to its mutilated appearance, and were told by the president of the grain company that it had been canceled without authority of the board of directors, and that the officers of the company had re-signed it. The officers of the bank made no further inquiry, either of the officers of the grain company or of the Bank of Topeka, as to the circumstances under which the cancella-

tion of bond No. 7 had occurred, but took it and surrendered the bonds then held by them.

The grain company, having failed in its effort to negotiate a sale of its bonds, was, on the petition of its creditors, adjudged a bankrupt. Afterwards the Bank of Topeka made proof of its claim as secured by the mortgage of November 1, 1904, and the same was allowed in the sum of $57,125, which, with taxes and insurance paid, pursuant to the terms of the mortgage, amounted to $61,106. The mortgaged property was afterwards sold for $93,750. This amount was not sufficient to pay the claims amounting to $22,000 secured by the first and second mortgages and the claim of the Bank of Topeka of $55,000 secured by the third mortgage.

On this state of facts the Merchants' National Bank claims it is entitled to that portion of the proceeds of the sale of the mortgaged premises properly applicable to bond No. 7. In other words, that it is entitled to fifteen seventy-fifths of such proceeds because of its ownership of that bond. The trustee, acting on behalf of all parties interested, and particularly the Bank of Topeka, disputes this claim and contends that as the debt of $55,000 owed by the bankrupt company to the Bank of Topeka was secured by the entire issue of $75,000 of bonds, and as the entire proceeds of sale of the mortgaged property was not sufficient, after satisfying the two prior liens, to fully pay the debt of the Bank of Topeka, the latter was entitled to all such proceeds. The question thus presented is: Which bank, under the facts of this case, is entitled to the security which bond No. 7 afforded.

Mulvane & Gault and D. R. Hite, all of Topeka, Kan., for appellant.

Charles Blood Smith and Samuel Barnum, both of Topeka, Kan., for appellee.

Before HOOK, ADAMS, and SMITH, Circuit Judges.

ADAMS, Circuit Judge (after stating the facts as above). We are of opinion that the learned trial judge was right in ordering the referee to hear the case on its merits, notwithstanding the claim was not presented in time, but, in the view we take of the merits of the case, it is unnecessary to elaborate our views on this feature, and proceed at once to a consideration of the merits.

[1] The amount of the debt of the Bank of Topeka is not disputed. It was $55,000. Neither is there any dispute that this entire debt was intended to be secured by the mortgage of November 1, 1904. For that purpose, and that purpose only, was the entire issue of $75,000 of bonds, secured by that mortgage, turned over to the Bank of Topeka. That bank was thus vested with title to each and all of the bonds. Has it ever transferred that title to bond No. 7 to the Merchants' National Bank? This is the question.

The facts show that it parted with the possession of the bond for a particular purpose only: To enable the bankrupt company to negotiate a sale of a proposed new issue of $125,000 of bonds, and by so doing to raise money with which to pay all its debts, including, of course, the full amount of $55,000 due to the Bank of Topeka. That bank, to

facilitate the transaction, turned over the possession of all the bonds held by it ($75,000), including the canceled bond No. 7, to the president of the bankrupt company, to be used by him in the way and for the purposes stated, namely, to make a demonstration that upon the payment of $55,000, in addition to $22,000 secured by the first two mortgages, all prior liens would be discharged, and the contemplated mortgage would stand as the first and only incumbrance upon the property.

We fail to discover any act done or left undone by the Bank of Topeka disclosing an intention to surrender its claim to bond No. 7 or to transfer title thereto to the Merchants' National Bank. The worst that can be said is: That it delivered evidence of its security into the possession of the mortgagor, thereby empowering the latter to perpetrate a fraud upon the unwary. If this was done, equitable considerations might estop the Bank of Topeka from now claiming the benefit of that security as against any one innocently defrauded by any use the mortgagor might make of it. But the facts do not make a case of this kind. The last-named bank did a friendly act only. It delivered bond No. 7 to the mortgagor for a use, lawful in itself, and entirely consistent with the retention of its full security. That bond bore evidence on its face of its infirmity as a negotiable or transferable security. The facts reported by the referee do not disclose how or in what way the cancellation of the bond was made, but he states that, when the president of the mortgagor company took the bonds to New York, bond No. 7 "was canceled," and in several places in his report he states that it was marked "canceled," and he further states that the Merchants' National Bank knew of such cancellation, and that, when it was offered to its president as a substitute for the bonds desired to be taken up, he "called attention to the mutilated appearance of the bond," and was given some explanation of it, which will hereafter be referred to.

It seems quite clear that the Bank of Topeka never intended to surrender the security partially evidenced by bond No. 7 without simultaneously securing payment of its entire debt of $55,000. The bond was canceled and surrendered as a step in the progress of a legitimate negotiation to accomplish that purpose, and for no other purpose. There is no showing that it came into the hands of the Merchants' National Bank with the knowledge or consent of the Bank of Topeka. The intent, therefore, on the part of that bank to transfer title to the Merchants' National Bank does not appear. The only intent manifested was to facilitate the bankrupt company in negotiating a new issue of bonds for refunding purposes. The bankrupt company, after securing the cancellation of bond No. 7, did an unauthorized act when it delivered it to the Merchants' National Bank as security for the payment of its debt. It was guilty of an unwarrantable conversion, and by so doing did not destroy or impair the security originally taken and held by the bank of Topeka for the payment of its entire debt, unless it in some manner is estopped from asserting its claim to such security; but nothing of that kind appears.

The Merchants' National Bank took the bond which had not only been canceled but which bore evidence of mutilation on its face. It knew exactly what it was taking, and could not have been misled or defrauded. "Volenti non fit injuria."

But it is argued that the transaction amounted to a reissue by the mortgagor of a security once paid and satisfied. We are unable to give our assent to this contention. The case of Claflin v. South Carolina R. Co. (C. C.) 8 Fed. 118, is relied on by counsel for the appellee to sustain this contention. In that case Chief Justice Waite, presiding in the Circuit Court, had occasion to consider the subject of the satisfaction of a mortgage debt and the reissue of bonds once secured by the mortgage. We are unable to find in it, when properly understood, any warrant for the contention of counsel for appellee. It is true the Chief Justice said he could not doubt the power of the mortgagor to put out and keep out the entire issue up to the time the bonds became due; but he also said, in discussing the subject, that it was "a question of intention to be gathered from the language of the instrument, considered with reference to the surrounding circumstances and the subject-matter of the contract." In other words, the familiar rule of law that the intention of the parties must prevail applies to the reissue of negotiable securities. Applying this test to the present contention, the solution is clear. The bond was canceled, not with the intention of showing payment of any part of the debt due to the bank of Topeka, nor for the purpose of surrendering any part of its security. On the contrary, it was done as a step in the progress of negotiating a new issue of bonds, and at the same time securing payment of the entire debt of the Bank of Topeka. This intention would be thwarted if a reissue of one or more of the bonds could have been made without the knowledge or consent of the pledgee and its security, which, as the sequel shows, proved inadequate, be thereby impaired. There certainly was no intention on the part of the parties interested to reissue this bond as an obligation secured by the mortgage of November 1, 1904.

The referee found that the president of the bankrupt company stated to the officers of the Merchants' National Bank, in answer to a request for an explanation of the mutilated appearance of the bond, that it was canceled without authority of the board of directors of the grain company, and that the officers had re-signed it. The referee also found that the president of the grain company was the only officer who knew or assented to a cancellation of the bond. He does not find or state that the bond was ever in fact re-signed by any officers of the grain company, and we have no reason to know, from what appears in this record, that such was the fact. Upon this somewhat contradictory and unsatisfactory explanation the referee found that the Merchants' National Bank accepted the bond without making any inquiry at sources of information readily available to its officers, as to the circumstances under which the alleged cancellation was made. It took the bond with full knowledge of facts which discredited it as an existing or valid obligation of the bankrupt company. If the officers had exercised reasonable care and caution in the light of facts actually made known to them, they would have been led to accurate information concerning the rights of the Bank of Topeka in and to the bond. Such being the facts, the Merchants' National Bank does not occupy the position of a holder in good faith of a security such as entitles it to hold it as against the real owner.

[2] There is a motion to dismiss the appeal in this case which requires attention. Counsel for appellee argue that the judgment appealed from presents a matter of law reviewable, according to the provisions of section 24b of the Bankruptcy Act, only by an original petition to revise, and does not present "a controversy arising in bankruptcy proceedings" reviewable, according to the provisions of section 24a of the act, by appeal. In making this contention we think counsel fail to give sufficient consideration to the provisions of section 25 of the act, which provides among other things:

> "That appeals as in equity cases may be taken * * * from a judgment allowing or rejecting a debt or claim of $500 or over."

What has already been said discloses that the decree appealed from is one allowing a claim to the Merchants' National Bank. It so states. It reads, after reciting the submission, as follows:

> "It is therefore ordered that the decision of the referee herein finding against the said claim of the Merchants' National Bank be, and the same is hereby, reversed, and the said referee is directed to allow said claim of said the Merchants' National Bank against the fund in the possession of the trustee, arising from the sale of the property of said bankrupt."

The fact that the decree incidentally established a lien and affected the interests of the Bank of Topeka does not destroy the essential character of the proceeding, to establish a preferential claim against certain assets of the bankrupt. Century Savings Bank v. Robert Moody & Son, 126 C. C. A. 499, 209 Fed. 775. The case just cited is also authority for the proposition that the matter in judgment in this case is a "controversy arising in bankruptcy proceedings," and reviewable by appeal under the provisions of section 24a also.

The motion to dismiss the appeal must be denied, and the decree of the District Court allowing the claim of the Merchants' National Bank, and directing its payment in full, is reversed, and the cause remanded, with directions to take further proceedings not inconsistent with this opinion.

(216 Fed. 869)

DENVER CHEMICAL MFG. CO. v. LILLEY et al.

(Circuit Court of Appeals, Eighth Circuit. July 29, 1914. Rehearing Denied November 2, 1914.)

No. 4140.

TRADE-MARKS AND TRADE-NAMES (§ 93*)—SUIT FOR UNFAIR COMPETITION—SUFFICIENCY OF EVIDENCE.

Findings of fact by a special master, concurred in by the trial court, that a trade-name, adopted by defendant for its product and used on its containers, was not one originally given by the general public to complainant's product, but was so applied generally to all similar products, *held* sustained by the evidence, and to warrant a decree dismissing complainant's bill for unfair competition by reason of its use by defendant.

[Ed. Note.—For other cases, see Trade-Marks and Trade-Names, Cent. Dig. §§ 104–106; Dec. Dig. § 93.*

Unfair competition in use of trade-mark or trade-name, see notes to Scheuer v. Muller, 20 C. C. A. 165; Lare v. Harper & Bros., 30 C. C. A. 376.]

Appeal from the District Court of the United States for the District of Kansas; John C. Pollock, Judge.

Suit in equity by the Denver Chemical Manufacturing Company against Thomas Lilley and the Germicide Company. Decree for defendants, and complainant appeals. Affirmed.

Henry D. Estabrook, of New York City (Edmund Wetmore and William A. Jenner, both of New York City, and S. W. Sawyer and Lathrop, Morrow, Fox & Moore, all of Kansas City, Mo., on the brief), for appellant.

Eugene S. Quinton, of Topeka, Kan. (Cranston, Pitkin & Moore, of Denver, Colo., on the brief), for appellees.

Before HOOK and CARLAND, Circuit Judges, and REED, District Judge.

CARLAND, Circuit Judge. This action was originally instituted by appellant against appellee Thomas Lilley, for the purpose of restraining him from unfair business competition. On application the Germicide Company, which manufactures the product alleged to have been sold by Lilley, was allowed to intervene. Issues having been joined and proofs taken, the case came on for hearing on pleadings, proofs, and master's report. As a result of the hearing the action was dismissed for want of equity.

The appellant manufactures a plastic compound called "Antiphlogistine." It began the manufacture of this medicament in Denver, Colo., in 1893. Its business grew very rapidly, until in 1900 the company for business reasons removed its plant from Denver, Colo., to the city of New York. Its sales at the time of the commencement of this action were upward of 2,000,000 pounds yearly, and its expenditures for advertising $100,000 yearly. Shortly after its product was first placed on the market, the general public gave to "Antiphlogistine" the

*For other cases see same topic & § NUMBER in Dec. & Am. Digs. 1907 to date, & Rep'r Indexes

nickname "Denver Mud." Appellant itself has never adopted the name "Denver Mud" as a label, or registered, advertised, or encouraged its use by the public or the trade. It is claimed, however, by appellant, that a customer may go into almost any drug store in almost any part of the globe—New York, London, Berlin, Paris, Omaha, Kansas City, Peoria, Pleasantville, Peaceful Valley, Bird Center—and ask for "Denver Mud," and he will be handed a can of "Antiphlogistine." This medicament is sold by appellant in tin containers bearing the following label:

COMPOSITION.

ANTIPHLOGISTINE IS A MIXTURE COMPOSED OF THE FINEST ANHYDROUS AND LEVIGATED ARGILLACEOUS MINERAL, CHEMICALLY PURE GLYCERINE, COMPOUNDS OF IODINE, REPRESENTING A SMALL PERCENTAGE OF ELEMENTARY IODINE, MINUTE QUANTITIES OF BORIC AND SALICYLIC ACIDS AND THE OILS OF PEPPERMINT GAULTHERIA AND EUCALYPTUS.

The Germicide Company, which has become the principal defendant, manufactures at Denver, Colo., a plastic compound called "Denver Mud." It is sold in tin containers and bears the following label:

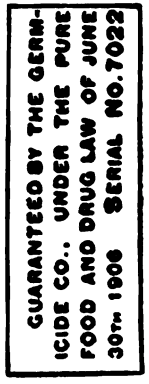

There are no disputed questions of law. It being conceded, as it must be, that while appellant adopted the name "Antiphlogistine" for its product, still if for some reason the general public has given to the product another and different name, by which it alone is known

to the trade, the appellant becomes entitled to protection by injunction against one who thereafter endeavors through the adoption of such term as the public employs as synonymous for or as a secondary designation of such product, for in so doing the purchasing public may be deceived as to the article purchased, and the appellant is deprived of that trade which its industry and money have built up. The question to be decided is entirely one of fact. The questions of fact are: Had the name "Denver Mud," prior to the use thereof by the Germicide Company, come to indicate and designate in the public mind the appellant's medicament alone? Is the Germicide Company, by the use of the label above described, endeavoring to pass off to the public its plastic compound as that of the appellant?

The intention of the Germicide Company must be found from what it does. It may be said that the labels above described are both printed upon yellow brown paper. They have been compared by this court from original exhibits, and outside of the words "Denver Mud" there can be found no intention to deceive from the labels themselves. So the question is narrowed to the use of the words "Denver Mud" upon the label of the Germicide Company. The Germicide Company claims that the term "Denver Mud" is a popular name for all preparations similar to those of appellant and appellees; that it was the proprietor's name for none, prior to the adoption thereof by the Germicide Company; that no product was labeled "Denver Mud," or advertised as "Denver Mud," by any owner, manufacturer, or dealer prior to the adoption thereof by the Germicide Company—"Denver Mud" simply being a popular term for the genus, plastic dressing; that, such being the case, the popular generic term was open for adoption as a specific and distinctive trade-name by any one.

After the evidence was taken, the case was referred by consent of parties to a special master to examine and consider the proofs and return answers to the following questions of fact:

"(1) At or about what date was the term 'Denver Mud' first commonly applied by the public to a plastic dressing or plastic dressings?

"(2) Out of what fact or circumstances did the name 'Denver Mud' arise? Was it from the fact that complainant commenced the manufacture and sale of its preparation, Antiphlogistine, and was the term 'Denver Mud' first commonly applied to such plastic dressing, or was its origin due to some other cause? If so, what?

"(3) Was the term 'Denver Mud' first commonly applied to Antiphlogistine, or was that name, when first coined and commonly applied to plastic dressing, employed by the public to designate other plastic dressings as well as Antiphlogistine? If so, what other dressing?"

To which the master returned answers from the proofs as follows:

"(1) The term 'Denver Mud' was first commonly applied by the public to plastic dressings about 1891."

"(2) The earlier products in plastic dressings were manufactured at Denver, Colo., from clay found in that vicinity forming their base; and from that fact or circumstance the name 'Denver Mud' arose and was applied to such dressings."

"(3) The name 'Denver Mud,' as applied to plastic dressings, did not arise from the fact that complainant commenced the manufacture and sale of its preparation, Antiphlogistine, and such term was not first commonly applied

to such plastic dressing, but its origin was due to the cause stated in finding No. 2."

"(4) The term 'Denver Mud' was not first commonly applied to Antiphlogistine, but that name, when first coined and commonly applied to plastic dressings, was employed by the public to designate other plastic dressings as well as Antiphlogistine, to wit, Althio, Glycol, Marach, and Anhydrocine, and afterwards was applied to all plastic dressings as they were produced and placed upon the market."

Exceptions were taken to this report of the special master, which upon a full consideration by the District Court were overruled, and the master's report confirmed. It is claimed by appellant that the questions submitted to the special master restricted the case to a too narrow compass; that there were other facts shown by an examination of all the testimony, which had an important bearing upon the general question of whether there was on the part of the Germicide Company unfair business competition as known to the law. But we think, after a careful examination of all the evidence, that there is no case whatever presented on the part of the appellant, when the words "Denver Mud" are eliminated from the label of the Germicide Company, and that the case must turn wholly upon the use of those words. The evidence has been examined by the special master and by the trial judge. They unite in answering certain questions from the evidence as detailed in the record. While we would not disturb the finding of fact, when concurred in by the master and the trial judge, unless there was a serious mistake, we do not in this case desire to place our judgment entirely upon that ground. An examination of the evidence has convinced us that the conclusions arrived at by the master and the judge are reasonable and sustained by the evidence.

It results that the decree appealed from must be affirmed; and it is so ordered.

(216 Fed. 872)

ST. AVIT et al. v. KETTLE RIVER CO.

(Circuit Court of Appeals, Eighth Circuit. August 25, 1914.)

No. 3954.

1. MUNICIPAL CORPORATIONS (§ 535*)—SPECIAL ASSESSMENTS FOR IMPROVEMENTS—GROUNDS FOR RESTRAINING ENFORCEMENT—"ANY."

Rev. St. Mo. 1899, § 5859, as amended by Laws Mo. 1901, p. 65, provides that, when a city council shall deem it necessary to pave, etc., "the roadway of any street," it shall so declare by resolution, and cause the resolution to be published as therein prescribed, and that if a protest is not filed within 10 days by a majority of the resident owners of the property liable to taxation therefor, who shall own a majority of the front feet, owned by residents of the city on the street to be improved, the council shall have power to contract for the improvement. It further provides that, when the council shall by ordinance find and declare that such a protest has not been filed, such finding and declaration shall be conclusive after the execution of the contract for the improvement. *Held* that, where such an ordinance was passed, a contract let, and the improvement made, property owners, who joined in a protest, could not thereafter enjoin the collection of the tax bills issued therefor against their property on the ground of the invalidity of the original resolution under which the work was ordered and done, because instead of being

*For other cases see same topic & § NUMBER in Dec. & Am. Digs. 1907 to date, & Rep'r Indexes

limited to "any street," as they contended was required by the statute, it embraced parts of three different streets; no such objection having been made in their protest.

[Ed. Note.—For other cases, see Municipal Corporations, Cent. Dig. § 1253; Dec. Dig. § 535.*

For other definitions, see Words and Phrases, First and Second Series, Any.]

2. CORPORATIONS (§ 487*)—CONTRACTS—RIGHTS ON CONTRACTS ULTRA VIRES.
Even though a contract by a corporation was ultra vires, such fact will not defeat its right to compensation for work done thereunder, where the contract has been fully executed on its part.

[Ed. Note.—For other cases, see Corporations, Cent. Dig. §§ 1893–1898; Dec. Dig. § 487.*]

3. CORPORATIONS (§ 657*)—FOREIGN CORPORATIONS—CONTRACTS—PENALTIES FOR VIOLATION OF STATUTE.
Under Rev. St. Mo. 1899, § 1026, which makes it a penal offense for a foreign corporation to do business in the state without first procuring a license as required by the preceding section, and further provides that no foreign corporation, which fails to comply with such requirement, can maintain any suit or action in any court of the state, the civil consequence thus prescribed for a violation of the statute is exclusive, and persons affected by a contract made by a corporation, which has not complied with its requirements, cannot maintain an affirmation suit to enjoin its enforcement.

[Ed. Note.—For other cases, see Corporations, Cent. Dig. §§ 2536–2541, 2550, 2552–2554; Dec. Dig. § 657.*

Foreign corporations doing business in state, see notes to Wagner v. J. & G. Meakin, 33 C. C. A. 585; Ammons v. Brunswick-Balke-Collender Co., 72 C. C. A. 622.]

Appeal from the District Court of the United States for the Eastern District of Missouri; David P. Dyer, Judge.

Suit in equity by John St. Avit and others against the Kettle River Company. Decree for defendant, and complainants appeal. Affirmed.

Wilson Cramer, of Jackson, Mo., for appellants.

I. R. Kelso, of Cape Girardeau, Mo. (J. G. Miller, of Cape Girardeau, Mo., on the brief), for appellee.

Before HOOK, ADAMS, and SMITH, Circuit Judges.

SMITH, Circuit Judge. [1] The complainants seek to cancel, as clouds upon their title, certain tax bills issued against their property by the city of Cape Girardeau to the Kettle River Company for grading, paving, and improving certain streets in said city. The improvements here in question were made in 1909, and before the revision of the statutes of Missouri for that year, and reference will therefore be made to the Revised Statutes of 1899 and subsequent amendments thereto. Among the laws of Missouri, as they existed at the time of the improvement, was the following substitute for section 5859 of the Revised Statutes of Missouri of 1899, as amended Laws 1901, p. 65:

"Sec. 5859. When the council shall deem it necessary to pave, macadamize, gutter, curb, grade or otherwise improve the roadway of any street, avenue or alley, or other highway, or any part thereof, within the limits of the city for which a special tax is to be levied as herein provided, the council shall, by resolution, declare such work or improvement necessary to be done, and

*For other cases see same topic & § NUMBER in Dec. & Am. Digs. 1907 to date, & Rep'r Indexes

cause such resolution to be published in some newspaper printed in the city for two consecutive insertions in a weekly paper, or seven consecutive insertions in a daily paper, and if a majority of the resident owners of the property liable to taxation therefor, at the date of the passage of such resolution, who shall own a majority of the front feet owned by residents of the city abutting on the street, avenue or alley proposed to be improved, shall not, within ten days thereafter, file with the clerk of the city their protest against such improvements, then the council shall have power to cause a contract for said work to be let to the lowest and best bidder on plans and specifications filed therefor with the city clerk by the engineer or other proper officer, not less than one week's advertisement for bids thereon being made in some newspaper published in the city. Where the bids for said work are above the estimates, or no bids are presented, the council may readvertise for bids. When the council shall by ordinance find and declare that a majority of the resident owners of the property liable to taxation therefor who shall also own a majority of the front feet owned by residents of the city abutting on the street or alley proposed to be improved, have not filed with the city clerk a protest against such improvement such finding and declaration shall be conclusive after the execution of the contract for said improvement, and no special tax bill shall be held invalid for the reason that a protest sufficiently signed was filed with the city clerk. All county or other public property," etc., etc.

The city council adopted a single resolution declaring it necessary to improve two blocks of Main street and two blocks of Themis street crossing the part of Main street ordered improved about the center and one block of Independence street extending that distance from Main street. In other words, the improvements ordered were of contiguous streets but not all on one street.

It is claimed that the statute quoted required a separate resolution for each named street. It will not be necessary to determine whether the expression used, "improve the roadway of any street," is of such a character as to limit the power of the city by a single resolution to determine the necessity for the improvement of a single named street. Webster's International Dictionary gives the word "any" as having the same derivation as the word "one," but states that "it is often used, either in the singular or the plural, as a pronoun." It is frequently used as synonymous with "every" or "all." Bouvier's Law Dictionary; Rapalje & Lawrence Law Dictionary; volume 1, Words and Phrases, 412 to 433.

The city council adopted the resolution, and it was duly published, and these complainants came in and objected to the contemplated improvements, but made no objection on the ground that three streets were included in the resolution or that more than one street was included therein. The first time this question was ever raised was in the hearing before the referee in this case. The bill of complaint in no way made the combining of the streets in one resolution or ordinance a ground for relief.

But the statute (section 5859, Revised Statutes of 1899), as amended, expressly provided that if the council by order found and declared that a majority of the resident owners of the property liable to taxation, who also owned a majority of the front feet owned by residents of the city abutting on the street proposed to be improved, had not filed with the city clerk a protest against such improvement, such finding and declaration should be conclusive after the execution of a contract for said

improvement, and no special tax bills should be held invalid, for the reason that a protest sufficiently signed was filed with the city clerk. Prior to the enactment of this amended statute it had been held that, in an action on the tax bills, the courts would revise the action of the city council in this regard. City of Sedalia v. Montgomery, 227 Mo. 1, 127 S. W. 50. But, since the enactment of this amendment to the statute, we have no doubt that the decision of the city council, which in this case was expressly made, was conclusive upon this question, as well as all others concerning the protest of adjacent property owners, and that, having failed to suggest the combining of three streets in one resolution until the hearing before the referee, nothing arising out of that fact can now avail the complainants.

[2] At the time it took the contract, the defendant was a corporation organized under the laws of Minnesota. The articles of incorporation contained the following:

"Know all men by these presents that we, the undersigned, do hereby associate ourselves together for the purpose of carrying on a manufacturing and mechanical business, and we do hereby form and organize a corporation under and pursuant to the provisions of chapter eleven (11) of the General Laws of the state of Minnesota for the year 1873, General Statutes of said state of Minnesota 1894, sections 2805 to 2826, inclusive, and all laws of said state amendatory thereof and applicable thereto, and to that end do hereby make, adopt and sign the following articles of incorporation:

"Article 1. The name of the corporation shall be 'Kettle River Quarries Company.' The general nature of its business shall be the manufacturing and quarrying of stone of any kind or description and the selling and disposing of the same, and the doing of anything and transaction of any business that is properly incidental to or necessarily connected with a general stone manufacturing business. The principal place of business of said corporation shall be at the city of Minneapolis in the county of Hennepin and state of Minnesota."

The Constitution of Missouri, art. 12, § 7, provides:

"No corporation shall engage in business other than that expressly authorized in its charter or the law under which it may have been or hereafter may be organized."

And the same provision was made by statute (section 971, R. S. Mo. 1899).

It must be borne in mind that this corporation has fully performed the contract upon its part. It is not claimed that the defendants are expressly prohibited by the law of the state of its origin to take the contract, nor is it claimed these laws did not authorize the formation of companies for the purpose of taking paving contracts like that in question. It is simply claimed there was an absence of the assumption of such power in the articles of incorporation of the defendant company, but it is claimed that the action of the company in taking the contract was ultra vires.

The Supreme Court of the United States has said:

"The doctrine of ultra vires, whether invoked for or against a corporation, is not favored in the law. It should never be applied where it will defeat the ends of justice, if such a result can be avoided." San Antonio v. Mehaffy, 96 U. S. 312, 315 (24 L. Ed. 816); Railway Co. v. McCarthy, 96 U. S. 258, 267 (24 L. Ed. 693).

In Sedgwick on the Construction of Statutory and Constitutional Law, 73, it is said:

"It must be further borne in mind that the invalidity of contracts made in violation of statutes is subject to the equitable exception that although a corporation, in making a contract, acts in disagreement with its charter, where it is a simple question of capacity or authority to contract, arising either on a question of regularity of organization or of power conferred by the charter, a party who has had the benefit of the agreement cannot be permitted, in an action founded on it, to question its validity. It would be in the highest degree inequitable and unjust to permit the defendant to repudiate a contract, the fruits of which he retains. And the principle of this exception has been extended to other cases. So a person who has borrowed money of a savings institution upon his promissory note, secured by a pledge of bank stock, is not entitled to an injunction to prevent the prosecution of the note, upon the ground that the savings bank was prohibited by its charter from making loans of that description."

In Thompson on Corporations (2d Ed.) § 2789, it is said:

"Thus an executed contract for the purchase by a corporation of a claim for damages, though ultra vires the charter of the corporation, has been held binding on the seller, and he could not raise the question of a lack of power to purchase the claim in an action thereon by the corporation. So one purchasing articles from a corporation and retaining the same will not be heard to object that the corporation was prohibited by law from trading in the specified articles. So the lessee of a corporation will not be allowed to escape the payment of rent for the time of his occupancy merely because the corporation had no power to execute the lease. On this point it has been said: 'Public policy is promoted by the discouragement of fraud and the maintenance of the obligation of contracts, and to permit a lessee of a corporation to escape the payment of rent by pleading the incapacity of the corporation to make the lease, although he has had the undisturbed enjoyment of the property, would be, we think, most inequitable and unjust.' So the maker of a note will not be allowed to defend an action thereon by the payee or its assignee on the ground that the corporation payee had no power to take it. So, in an action by a building association on a note given by one of its members and secured by his stock as collateral, he will not be permitted to defend on the ground that the association had no power to loan money, except on real estate. So where a contract with a corporation was one of partnership between the parties, and therefore ultra vires as to the plaintiff corporation under its charter, that fact, while it would justify a court in refusing to aid in the enforcement of the contract, so far as it remained executory, could not be urged as a defense to an action by the corporation for an accounting as to the part of the contract that had been executed. The rule is the same where the executed contract takes the form of a subscription to the stock of another corporation."

In Thomas v. Railroad Co., 101 U. S. 71, 86 (25 L. Ed. 950), it is said:

"In regard to corporations, the rule has been well laid down by Comstock, C. J., in Parish v. Wheeler, 22 N. Y. 494, that the executed dealings of corporations must be allowed to stand for and against both parties, when the plainest rules of good faith require it."

In Ellett-Kendall Shoe Co. v. Western Stores Co., 132 Mo. App. 513, 112 S. W. 4, it is said:

"The defense of ultra vires is not open to a corporation where the contract has been fully executed on the part of the other contracting party and is not expressly prohibited by law"—citing Grohmann v. Brown, 68 Mo. App. 630; City of Goodland v. Bank, 74 Mo. App. 365; Winscott v. Investment Co., 63 Mo. App. 367.

See, also, First National Bank v. Guardian Trust Co., 187 Mo. 495, 86 S. W. 109, 70 L. R. A. 79.

We conclude that this defense is not available to the complainants.

[3] Under the laws of Missouri at the time in question, a foreign corporation could not, with certain exceptions mentioned in the statute, do business in the state without first obtaining a license from the Secretary of State granted upon conditions specified in the statute. Section 1025, R. S. Mo. 1899. It was further provided:

"Sec. 1026. Penalty for Violation of Two Preceding Sections—Duties of Secretary of State and Prosecuting Attorneys—Penalties to Go Where.—Every corporation for pecuniary profit, formed in any other state, territory or country, now doing business in or which may hereafter do business in this state, which shall neglect or fail to comply with the conditions of this law, shall be subject to a fine of not less than $1,000, to be recovered before any court of competent jurisdiction; and it is hereby made the duty of the Secretary of State, immediately after August 1, of the year 1891, and as often thereafter as he may be advised that corporations are doing business in contravention to this act, to report the fact to the prosecuting attorney of the county in which the business of such corporation is located, and the prosecuting attorney shall, as soon thereafter as is practicable, institute proceedings to recover the fine herein provided for, which shall go into the revenue fund of the county in which the cause shall accrue; in addition to which penalty, on and after the going into effect of this act, no foreign corporation, as above defined, which shall fail to comply with this act, can maintain any suit or action, either legal or equitable, in any of the courts of this state, upon any demand, whether arising out of contract or tort: Provided, that the provisions of this section shall not apply to railroad companies which have heretofore built their lines of railway into or through this state; nor to 'drummers' or traveling salesmen soliciting business in this state for foreign corporations which are entirely nonresident."

The defendant was a foreign corporation, took the contract, and performed the work without complying with the Missouri statutes. It will be observed that this statute first makes it a penal offense to do business without complying with the laws of Missouri, and it is probable that this action could be maintained if the statute went no further, because it has been expressly held by the Supreme Court of Missouri that the doing of business in the state without complying with the Missouri law is illegal. Amalgamated Co. v. Mining Co., 221 Mo. 7, 120 S. W. 31, 23 L. R. A. (N. S.) 492; Chicago Co. v. Sims, 197 Mo. 507, 95 S. W. 344; Tri-State Amusement Co. v. Amusement Co., 192 Mo. 404, 90 S. W. 1020, 4 L. R. A. (N. S.) 688, 111 Am. St. Rep. 511, 4 Ann. Cas. 808. But, not satisfied with making it a penal offense, the Legislature by the same act took up the question of civil liability and the jurisdiction, legal and equitable, of the civil courts, and expressly provided that:

"On and after the going into effect of this act, no foreign corporation, as above defined, which shall fail to comply with this act, can maintain any suit or action, either legal or equitable, in any of the courts of this state, upon any demand whether arising out of contract or tort."

This statute is highly penal and must be strictly construed. Bolles v. Outing Co., 175 U. S. 262, 20 Sup. Ct. 94, 44 L. Ed. 156; Erbaugh v. United States, 173 Fed. 433, 97 C. C. A. 663; Martin v. United States, 168 Fed. 198, 93 C. C. A. 484; Johnson v. S. P. Co., 117 Fed. 462, 54 C. C. A. 508.

A penal statute, plain in its terms, which creates and denounces a new offense, should be strictly construed. St. Louis Merchants' Bridge

T. Ry. Co. v. United States, 188 Fed. 191, 110 C. C. A. 63; Sedgwick on the Construction of Statutory and Constitutional Law (2d Ed.) p. 279 et seq.

In Parke, Davis & Co. v. Mullett, 245 Mo. 168, 149 S. W. 461, where the suit was brought by the corporation, the court said that:

"It was not for defendants' sake, therefore, that the provision was made, but it is a rule of state policy of which the defendants may incidentally take advantage."

If this suit had been brought by the city of Cape Girardeau, it would therefore have been true that the provision of the statute was not made for it, and this is all the more true of the appellants. It is a maxim especially applicable to statutory construction. "Expressio unius est exclusio alterius," and where, under the decision of the Supreme Court of Missouri, the rights, if any, of the appellants are not granted directly to it or to the one through whom it claims this is especially applicable. The Legislature having entered upon the determination in this penal statute of what suits could or could not be maintained in the courts of Missouri, it cannot, from any general rule of the law, be inferred that different proceedings were authorized by the fact that the contract was made illegal. True, if the statute made the contract illegal and stopped there, this suit could be maintained, but it did more, and prescribed the civil remedy, and did not include this remedy.

If this statute was applicable, then the complainants had, under the terms of the statute, a complete defense to a suit on the tax bills, and this was the exclusive remedy prescribed by the statute, and the District Court was therefore right in denying the complainants' bill, and its decree is affirmed.

(216 Fed. 878)

In re BREYER PRINTING CO.

BORLAND v. CENTRAL TRUST CO. OF ILLINOIS.

(Circuit Court of Appeals, Seventh Circuit. August 12, 1914.)

No. 2084.

1. BANKRUPTCY (§ 440*)—REVIEW—"PROCEEDINGS IN BANKRUPTCY"—"CONTROVERSIES AT LAW AND IN EQUITY IN COURSE OF BANKRUPTCY PROCEEDINGS."

Bankr. Act July 1, 1898, c. 541, §§ 23–25, 30 Stat. 552, 553 (U. S. Comp. St. 1901, pp. 3431, 3432), relating to review of orders and judgments arising in the administration of a bankrupt's estate, create a clear distinction between "proceedings in bankruptcy," reviewable by petition to review and revise and "controversies at law and in equity arising in the course of bankruptcy proceedings," reviewable by appeal; proceedings in bankruptcy covering questions between the alleged bankrupt or the receiver or trustee on the one hand and the general creditors as such on the other, commencing with the petition for adjudication and ending with the discharge, including matters of administration generally, while controversies at law and in equity arising in the course of bankruptcy proceedings involve questions between the receiver or trustee, representing the bankrupt and his general creditors as such, on the one hand, and adverse claimants, on the other, concerning property in the possession of the receiver or trustee or of the claimants, to be litigated in appropriate plenary

*For other cases see same topic & § NUMBER in Dec. & Am. Digs. 1907 to date, & Rep'r Indexes

suits, and not affecting directly administrative orders and judgments, but only the extent of the estate to be distributed ultimately among general creditors.

[Ed. Note.—For other cases, see Bankruptcy, Cent. Dig. § 915; Dec. Dig. § 440.*

For other definitions, see Words and Phrases, Second Series, Controversy Arising in Bankruptcy Proceedings; Proceeding in Bankruptcy.

Appeal and review in bankruptcy cases, see note to In re Eggert, 43 C. C. A. 9.]

2. BANKRUPTCY (§ 440*)—LIENS—VALIDITY—DETERMINATION—PROCEEDINGS IN BANKRUPTCY—CONTROVERSY ARISING IN BANKRUPTCY PROCEEDINGS.

Petitioner, who was a bankrupt's landlord, having seized certain of the bankrupt's property for rent in arrear, after adjudication placed the property in the possession of the trustee, subject to petitioner's lien, if any, under an agreement that the property might be sold and that petitioner's right should attach to the proceeds, after which petitioner prayed for an order that the trustee be directed to pay the amount of petitioner's claim out of such proceeds. The trustee claimed title and right of possession in and to the distrained chattels superior to that of petitioner, and the referee rejected petitioner's asserted lien and found in favor of the trustee, which determination was confirmed by the district judge. *Held*, that such proceeding was not a proceeding in bankruptcy, reviewable by petition to review, but was rather a controversy arising in the course of bankruptcy proceedings, reviewable by appeal, and this notwithstanding the petition stated the amount of rent due from the bankrupt, and asked that the trustee be ordered to pay the amount thereof, and the referee gratuitously allowed the amount of rent and costs as a general claim against the estate.

[Ed. Note.—For other cases, see Bankruptcy, Cent. Dig. § 915; Dec. Dig. § 440.*]

Petition to Review and Revise Order of the District Court of the United States for the Eastern Division of the Northern District of Illinois, in Bankruptcy.

In the matter of bankruptcy proceedings of the Breyer Printing Company. An order was entered by the referee rejecting the claim of H. B. Borland to his asserted lien on the proceeds of certain chattels alleged to have been acquired by him under a distress warrant, but in the possession of the Central Trust Company of Illinois as the bankrupt's trustee, which order was affirmed by the District Judge, and petitioner files a petition to review and revise. On motion to dismiss. Granted.

Allen G. Mills, of Chicago, Ill., for petitioner.
Alvin H. Culver, of Chicago, Ill., for respondent.

Before BAKER, SEAMAN, and MACK, Circuit Judges.

BAKER, Circuit Judge. Respondent has interposed a motion to dismiss this petition to review and revise on the ground that the subject-matter is not within our jurisdiction under section 24b. Facts disclosed in the petition are these: On December 26, 1912, the Breyer Printing Company was adjudicated a bankrupt upon a petition of creditors filed on December 24, 1912, and the Central Trust Company was appointed receiver and afterwards was duly elected trustee. Petitioner leased certain premises to the Breyer Printing Company

*For other cases see same topic & § NUMBER in Dec. & Am. Digs. 1907 to date, & Rep'r Indexes

on May 1, 1910, and claims that on December 1, 1912, there was rent due and unpaid to the extent of $1,666. On December 9, 1912, petitioner caused a distress warrant for that sum to be levied on certain chattels. From December 9 to December 27, 1912, these chattels were in the actual possession of petitioner under and by virtue of the distress warrant. On December 27, 1912, petitioner and the Central Trust Company entered into an agreement whereby the chattels were placed in the possession of the Central Trust Company subject to the lien and right of possession of petitioner, with the further stipulation that petitioner's right should attach to the proceeds if the chattels should be sold before petitioner's right was adjudicated. On January 10, 1913, petitioner filed in the District Court in bankruptcy his petition, in which he set out the foregoing facts respecting the lease, the seizure of chattels under the distress warrant, his possession thereunder, and his transfer of possession to the Central Trust Company under the recited agreement. The chattels in question were sold by the Central Trust Company for a sum in excess of the rent and costs due petitioner under the distress warrant. The prayer of the petition to the District Court was that the Central Trust Company as receiver and trustee should therefore be directed to pay to the petitioner the amount of her claim for rent and costs. The Central Trust Company answered the petition in the bankruptcy court by neither admitting nor denying the averments of the petition, and by affirmatively claiming title and right of possession in and to the distrained chattels superior to the right of petitioner; and the referee's order rejecting petitioner's asserted lien and finding title and right of possession in the trustee was confirmed by the District Judge.

[1] Sections 23, 24, and 25 of the Bankruptcy Act draw a clear line of demarcation between "proceedings in bankruptcy" and "controversies at law and in equity arising in bankruptcy proceedings." "Proceedings in bankruptcy" cover questions between the alleged bankrupt or the receiver or trustee of the bankrupt estate, on the one hand, and the general creditors, as such, on the other, commencing with the petition for adjudication, ending with the discharge, and including matters of administration generally, such as appointment of receivers and trustees, as well as examinations, exemptions, allowance and disallowance of claims, and the like, all of which naturally occur in the settlement of the estate. "Controversies at law and in equity arising in the course of bankruptcy proceedings" involve questions between the receiver or trustee representing the bankrupt and his general creditors, as such, on the one hand, and adverse claimants on the other, concerning property in the possession of the receiver or trustee or of the claimants, to be litigated in appropriate plenary suits, and not affecting directly administrative orders and judgments, but only the extent of the estate to be distributed ultimately among general creditors. Matter of Loving, 224 U. S. 183, 32 Sup. Ct. 446, 56 L. Ed. 725; United States Fidelity Co. v. Bray, 225 U. S. 205, 217, 32 Sup. Ct. 620, 56 L. Ed. 1055; In re Mueller, 135 Fed. 711, 68 C. C. A. 349; In re Friend, 134 Fed. 778, 67 C. C. A. 500.

[2] Did the landlord's petition in the bankruptcy court institute a

"proceeding in bankruptcy" of an administrative character, or did it present a "controversy arising in the course of bankruptcy proceedings" in the nature of a suit in equity? If of the former class, our jurisdiction to review would attach under section 24b or 25a as might be appropriate to the particular proceeding in bankruptcy. If of the latter class, our jurisdiction could be invoked only under section 24a. For a defeated party is not at liberty to disregard the appropriate appellate remedy provided for his case and choose some other that may better suit his inclination or convenience. Matter of Loving, 224 U. S. 187, 32 Sup. Ct. 446, 56 L. Ed. 725; United States v. Beatty, 232 U. S. 463, 34 Sup. Ct. 392, 58 L. Ed. 686; In re Friend, 134 Fed. 778, 780, 67 C. C. A. 500. And this remains true although the appellate court may allow a writ of error which is addressed to questions of law involved in a "proceeding in bankruptcy" to stand as a petition to review and revise, since both are ranged on the same side of the demarcating line and the methods are substantially alike. Freed v. Central Trust Co., 215 Fed. 873, 132 C. C. A. 7.

If a creditor files and asks the allowance of a claim as an unsecured creditor, he plainly institutes a "proceeding in bankruptcy." And if in connection with the presentation of such a claim he asserts grounds why in the distribution of the proceeds of the estate he should be given priority over other general creditors (as in Coder v. Arts, 213 U. S. 223, 29 Sup. Ct. 436, 53 L. Ed. 772, 16 Ann. Cas. 1008; Matter of Loving, 224 U. S. 183, 32 Sup. Ct. 446, 56 L. Ed. 725; In re Streator Metal Stamping Co., 205 Fed. 280, 123 C. C. A. 444), the matter so presented nevertheless remains a "proceeding in bankruptcy." And even if the trustee in his answer admits and allows the general claim and contests only the creditor's right to priority, the nature of the proceeding is not affected. Loving and Streator Cases, supra. On the other hand, it is clear that if a claimant is in possession of chattels under a bill of sale or mortgage, and if subsequent to his possession a petition in bankruptcy is filed and an adjudication in bankruptcy had against his grantor or mortgagor, and if thereafter the receiver or trustee of the bankrupt estate disputes the holder's right of possession, a controversy arises which is outside of the matter of the administration of the bankrupt estate. The property in question has not come into the custody of the bankruptcy court or of the receiver or trustee under and by virtue of the adjudication. If the holder maintains his possession and the trustee is compelled to bring a suit against him either in the bankruptcy court or some other court to cancel the alleged title or lien and to recover the property, the resulting order or decree could not be reviewed under 24b or 25a for the reason that the proceeding resulting in such order or decree was not a "proceeding in bankruptcy" within the administration of the estate. And the essential nature of the controversy respecting the holder's title or lien cannot, in our opinion, be affected by the question whether the suit to determine the validity of the alleged title or lien is begun by the petition or bill of the trustee or of the adverse claimant. Where the adverse claimant in possession of chattels turns them over to the trustee subject to his rights, for the purpose of having the

bankruptcy court adjudicate his rights upon his petition, the property, though then in the possession of the trustee, has not come into the hands of the trustee under and by virtue of the adjudication, and the controversy is no less a controversy between the trustee and an adverse claimant than it would be if the claimant had retained possession and compelled the trustee to take the initiative. This must be so, because even where the property has been received by the trustee directly from the bankrupt under and by virtue of the adjudication, it is authoritatively held that the petition of one who asserts a right of possession, either by virtue of a title or by virtue of a lien, presents a "controversy" as distinguished from a "proceeding in bankruptcy." Hewit v. Berlin Machine Works, 194 U. S. 296, 24 Sup. Ct. 690, 48 L. Ed. 986; Whitney v. Wenman, 198 U. S. 539, 25 Sup. Ct. 778, 49 L. Ed. 1157; Knapp v. Milwaukee Trust Co., 216 U. S. 553, 30 Sup. Ct. 412, 54 L. Ed. 610.

Against the conclusion that the order or decree of the bankruptcy court was made in the settlement of a "controversy" between the trustee and an adversary who claimed a lien upon and right of possession of specific chattels, it is urged that the claimant's pleading should be construed as a presentation of a claim of a general creditor for allowance, accompanied by a statement of grounds why he should be given priority in the ultimate distribution of assets over other general creditors. Counsel insist that this construction of the pleading is permissible because it contains a statement of the amount of rent due from the bankrupt and asks that the trustee be ordered to pay the amount thereof. But no adverse claimant could set up his right in and to certain specific chattels under his lien without disclosing the fact and amount of the debt secured by the lien. And the petition in this case, as in every such case, asks a mandate upon the trustee to pay money only in the event that the specific chattels have been sold pending the determination of the adverse claimant's rights.

Inasmuch as the adverse claimant's petition and the trustee's answer formulated only an issue concerning the title and right of possession of certain chattels (or the proceeds of sale in lieu thereof), the fact that the referee gratuitously allowed the amount of rent and costs as a general claim cannot convert the "controversy" into a "proceeding in bankruptcy." The only matter taken from the referee to the District Judge was the issue in the equitable controversy; and the correctness of the decree on that issue is not determinable by us under section 24b.

The petition to review and revise is therefore dismissed for lack of jurisdiction.

(216 Fed. 883)

In re ORR et al.

AUSTRIAN v. CENTRAL TRUST CO. OF ILLINOIS.

(Circuit Court of Appeals, Seventh Circuit. August 12, 1914.)

No. 2086.

Petition to Review and Revise Order of the District Court of the United States for the Eastern Division of the Northern District of Illinois, in Bankruptcy.

In the matter of bankruptcy proceedings of Bertha S. Orr and Hannah Store, doing business as the Lake Shore Catering Company. Mamie R. Austrian filed an adverse claim to certain chattels in the possession of the Central Trust Company of Illinois as the bankrupts' trustee, and, such claim being denied, filed a petition to review and revise. Dismissed.

Carl Meyer, of Chicago, Ill., for petitioner.

Fred D. Silber and Clarence J. Silber, both of Chicago, Ill., for respondent.

Before BAKER, SEAMAN, and MACK, Circuit Judges.

BAKER, Circuit Judge. This petition to review and revise presents a situation in all material respects exactly the same as that considered in the Case of the Breyer Printing Co. (No. 2084) 216 Fed. 878,† herewith decided. For the reasons therein set forth, we are constrained to hold that the matter before the District Court in bankruptcy was a "controversy arising in the course of bankruptcy proceedings," and not a "proceeding in bankruptcy."

The petition to review and revise is therefore dismissed for lack of jurisdiction.

(216 Fed. 883)

UNITED STATES v. BOARD OF COM'RS OF OSAGE COUNTY, OKL., et al.

BOARD OF COM'RS OF OSAGE COUNTY, OKL., et al. v. UNITED STATES.

(Circuit Court of Appeals, Eighth Circuit. August 20, 1914.)

Nos. 4073, 4074.

TAXATION (§ 181*)—LANDS OF OSAGE INDIAN ALLOTEEES—HOMESTEAD AND SURPLUS LANDS.

Act June 28, 1906, c. 3572, § 2, par. 4, 34 Stat. 541, provides that homestead lands of Osage Indian allottees "shall be inalienable and nontaxable until otherwise provided by act of Congress," and that their surplus lands "shall be inalienable for 25 years except as hereinafter provided." Paragraph 7 authorizes the Secretary of the Interior in his discretion to issue a certificate of competency to any adult member of the tribe authorizing him to sell and convey any of his lands "except his homestead, which shall remain inalienable and nontaxable for a period of 25 years or during the life of the homestead allottee." It further provides that on the issuance of such certificate the surplus lands of the allottee "shall become subject to taxation," but that in cases where no such certificate is issued they "shall be nontaxable for the period of three years from the approval of this act," except in case of the death of the allottee. *Held*, that as to homesteads the restrictions against taxation were coextensive with those against alienation, and that in any case such lands were not taxable for 25 years, or until after the death of the allottee in case he had received a certificate of competency; that the surplus lands remained nontaxable for a period of three years, unless a certificate of

*For other cases see same topic & § NUMBER in Dec. & Am. Digs. 1907 to date, & Rep'r Indexes

† 133 C. C. A. 82.

competency was issued to the allottee or in case of his death, in either of which cases they became taxable at once.

[Ed. Note.—For other cases, see Taxation, Cent. Dig. § 45; Dec. Dig. § 181.*]

Appeal from the District Court of the United States for the Western District of Oklahoma; John H. Cotteral, Judge.

Suit in equity by the United States against the Board of County Commissioners of Osage County, Okl., and others. From the decree, both parties appeal. Affirmed.

See, also, 193 Fed. 485.

Preston A. Shinn and Isaac D. Taylor, both of Pawhuska, Okl. (Charles J. Kappler, of Washington, D. C., on the brief), for the United States.

Charles M. Cope, Co. Atty., of Pawhuska, Okl., and Charles L. Moore, Asst. Atty. Gen., of Oklahoma (Charles West, Atty. Gen., of Oklahoma, on the brief), for Board of Com'rs of Osage County, Okl., and others.

Before HOOK and SMITH, Circuit Judges, and AMIDON, District Judge.

AMIDON, District Judge. The government brought this suit to restrain the collection of taxes levied upon allotments of Osage Indians. Two classes of allotments are involved, homesteads and surplus lands. Each of these is subdivided in the bill, but in the disposition which we make of the case those differences become unimportant. The trial court held the homesteads to be nontaxable, and issued the injunction prayed, and canceled the levy as a cloud upon the title. It held surplus lands to be taxable, and denied any relief as to them. Defendants appealed from the first part of the decree, and the government from the last part.

The Osage allotments were made under the act of June 28, 1906, 34 Stat. at Large, 539. Each Indian is given three tracts of 160 acres each. Subdivision 4 of section 2 of the act then proceeds as follows:

"Each member of said tribe shall be permitted to designate which of his three selections shall be a homestead, and the same shall be inalienable and nontaxable until otherwise provided by act of Congress. The other two selections of each member, together with his share of the remaining lands allotted to the member, shall be known as surplus lands, and shall be inalienable for twenty-five years, except as hereinafter provided."

The seventh subdivision of the same section empowers the Secretary of the Interior, upon petition of any adult member of the tribe, to issue to such member a certificate of competency—

"authorizing him to sell and convey any of the lands deeded him by reason of this act, except his homestead, which shall remain inalienable and nontaxable for a period of twenty-five years, or during the life of the homestead allottee; provided, that upon the issuance of such certificates of competency, the lands of such member, (except his or her homestead), shall become subject to taxation, and such member, except as herein provided, shall have the right to manage, control and dispose of his or her lands, the same as any

*For other cases see same topic & § NUMBER in Dec. & Am. Digs. 1907 to date, & Rep'r Indexes

citizen of the United States; provided, that the surplus lands shall be nontaxable for the period of three years from the approval of this act, except where certificates of competency are issued, or in case of the death of the allottee, unless otherwise provided by Congress."

We had the foregoing provisions of section 2 before us in the case of Aaron v. United States, 204 Fed. 943, 123 C. C. A. 265. We there held that the homesteads of Osage Indians, to whom certificates of competency had not been issued, were inalienable "until otherwise provided by act of Congress," and that the homesteads of such Indians holding certificates of competency were inalienable "for a period of twenty-five years, or during the life of the homestead allottee." We also held that this restriction was not personal to the allottee, but ran with the land. All that is said in that opinion as to the restriction against alienation applies equally to the restriction against taxation. The statute makes no distinction between the two classes of restrictions, and none can properly be made by the court. The decision of the trial court, therefore, as to homesteads, was clearly right.

Except as to Indians holding certificates of competency, as provided in subdivision 7, the last sentence of subdivision 4 makes all surplus lands allotted to Osage Indians "inalienable for twenty-five years." Because of this restriction the government urges that we should, by implication, hold the lands to be nontaxable pursuant to the doctrines declared in United States v. Rickert, 188 U. S. 432, 23 Sup. Ct. 478, 47 L. Ed. 532. But we cannot be governed by implications against the express language of the statute. The act shows plainly that Congress had in mind the distinction between nontaxability and nonalienability. It expressly provided that the homesteads should be inalienable and nontaxable, but as to surplus lands it is provided, in the next sentence, that they shall be "inalienable" only. The same distinction is made in subdivision 7. Not only did Congress have this distinction clearly in mind, but in the second proviso of paragraph 7 it enacted that the surplus lands shall be nontaxable *for the period of three years from the approval of this act.* The irresistible import of this language is that after the expiration of the three-year period surplus lands should be taxable; also that they would have been taxable during the three-year period had it not been for the proviso. Exceptions from a power establish the power as well as define its limits. Gibbons v. Ogden, 9 Wheat. 1, 190, 6 L. Ed. 23.

This clear import of the language of the statute is reinforced by its history. As originally introduced in the House, subdivision 4 provided that surplus lands should be "nontaxable and inalienable for twenty-five years." In the Senate numerous amendments to the statute were proposed. The Secretary of the Interior addressed a letter to C. F. Larrabee, the acting Commissioner of Indian Affairs, requesting his views upon these amendments. One of the amendments proposed to strike out the words "nontaxable and" in the last clause of subdivision 4, relating to the surplus lands. Speaking of this amendment as one which would make the "surplus lands subject to taxation," Mr. Larrabee said: "This office sees no special objection to this provision." There was also an amendment which, in the judgment of

the commissioner, would have made homesteads taxable. Speaking of both of these subjects he proceeds in his letter as follows:

"The office strongly opposes the first proposed amendment providing for the collection of taxes on the homesteads. This is in direct conflict with the provision in lines 8 and 9 on page 6, which declares that the homestead shall be inalienable and nontaxable, until otherwise provided by act of Congress. Certainly the homesteads of the Indians should be free from taxation as long as they are held in trust for the benefit of the allottees. Such has been the invariable policy of the government from the time the Indian allotments were made, and it is thought that an exception should not be made in the case of the Osages. But I see no special objection to the alternative amendment which provides merely for the payment of taxes on the surplus lands. It is believed that the Osage Indians should be required to pay taxes on their surplus lands, the same as citizens of Oklahoma Territory. There occurs to me no valid reason why the Indians should not be required to bear their share of the burden of the state and county maintenance through taxation on their surplus lands."

This letter was submitted to the Senate by the Committee on Indian Affairs in support of its proposed amendment striking out the words "nontaxable and." The amendment was agreed to, and was afterwards concurred in by the House. This seems to leave no doubt of the intent of Congress to make surplus lands taxable.

We are unable to find in the records of Congress the origin of the second proviso of the seventh subdivision, which reads as follows:

"Provided that the surplus lands shall be nontaxable for the period of three years from the approval of this act, except where certificates of competency are issued or in case of the death of the allottee."

Its purpose, however, seems to us reasonably plain. Congress first intended to suspend the taxability of surplus lands for the period of three years. From this exemption it excepted the surplus lands of Indians who died during the three-year period, or who should receive certificates of competency during that time.

We agree with the views expressed by the trial court that oil, gas, coal, and other minerals contained in allotments to Osage Indians, do not pass by the allotment or become subject to taxation. They are expressly reserved to the tribe. This restriction is imposed by the nation. No act or omission of the Indians or of state authorities can impair it. Bowling v. United States, 233 U. S. 528, 34 Sup. Ct. 659, 58 L. Ed. 1080.

The decree of the trial court is affirmed.

(216 Fed. 887)

In re GOLDSTEIN et al.

BENJAMIN et al. v. CENTRAL TRUST CO.

(Circuit Court of Appeals, Seventh Circuit. August 12, 1914.)

No. 2016.

1. BANKRUPTCY (§ 439*)—ADMINISTRATION OF ESTATES—SUMMARY ORDERS—REVIEW.

Jurisdiction to review a summary order in bankruptcy proceedings is by original petition under Bankr. Act July 1, 1898, c. 541, § 24b, 30 Stat. 553 (U. S. Comp. St. 1901, p. 3432).

[Ed. Note.—For other cases, see Bankruptcy, Cent. Dig. § 915; Dec. Dig. § 439.*

Appeal and review in bankruptcy cases, see note to In re Eggert, 43 C. C. A. 9.]

2. BANKRUPTCY (§ 209*)—ADMINISTRATION—OBTAINING ASSETS—ADVERSE TITLE—POSSESSION AS AGENT OR BAILEE—SUMMARY PROCEEDINGS.

Where there is a claim of adverse title to property of bankrupts, based on a transfer antedating bankruptcy, a plenary suit must be brought by the trustee, in which the adverse claim may be tried and adjudicated; but where the property is in the physical possession of a third person, or of an agent of the bankrupts, or of an officer of a bankrupt corporation, who refuses to deliver the property to the bankrupts' trustee, he may recover it by means of a summary order in bankruptcy.

[Ed. Note.—For other cases, see Bankruptcy, Cent. Dig. § 318; Dec. Dig. § 209.*]

3. BANKRUPTCY (§ 212*)—RECOVERY OF ASSETS—NONCOLORABLE CLAIM.

Where a bankrupt's trustee institutes summary proceedings to recover property in the hands of a third person, a noncolorable claim, requiring dismissal of the proceedings at the claimant's instance, substantially appears as soon as the claimant presents his verified answer, which is unmet by the trustee, or which, if met by a replication, is supported by sworn testimony of facts which, if true, would show title and possession antedating the petition in bankruptcy.

[Ed. Note.—For other cases, see Bankruptcy, Cent. Dig. § 236; Dec. Dig. § 212.*]

Petition to Review and Revise Order of the District Court of the United States for the Eastern Division of the Northern District of Illinois, in bankruptcy.

In the matter of bankruptcy proceedings of Morris Goldstein and Benjamin Moseson. Petition to review a summary order directing Benjamin Bros. to pay the Central Trust Company, as the bankrupts' trustee, $8,375 for goods alleged to have been fraudulently transferred by the bankrupts. Reversed, with directions.

This is an original petition to review and revise a summary order of the District Court directing Benjamin Bros. to pay to the trustee in bankruptcy the sum of $8,375.

On December 30, 1912, an involuntary petition in bankruptcy was filed against Goldstein and Moseson. Adjudication was entered February 10, 1913. Later the Central Trust Company was elected trustee.

Prior to May 10, 1913, the judge of the District Court conducted an investigation to discover assets of the bankrupts. During this investigation Benjamin Bros. were brought into court and gave their testimony. At this time no issue of law or fact had been formed for the adjudication of any rights of Benjamin Bros.

*For other cases see same topic & § NUMBER in Dec. & Am. Digs. 1907 to date, & Rep'r Indexes

On May 10, 1913, the trustee filed its petition, alleging that on December 24, 1912, six days before the involuntary petition in bankruptcy was filed, Goldstein and Moseson had transferred goods amounting to $8,375 to Benjamin Bros.; that Benjamin Bros. caused Goldstein and Moseson to issue to them fictitious bills of sale, for which Goldstein and Moseson received no consideration; that Benjamin Bros. sold a large part of the property and commingled the remainder with their own, so that the trustee could not identify them. Wherefore the trustee prayed for an order on Benjamin Bros. to show cause why they should not pay $8,375 to the trustee.

Benjamin Bros. filed their verified answers, objecting to the summary proceeding, denying that they had received any of the goods as agents or bailees of Goldstein and Moseson, and averring that prior to the institution of bankruptcy proceedings they had bought and paid for the goods, and had taken possession and were retaining possession of them and of the proceeds of sale as their own.

No replication was filed. A hearing was had by submitting to the court a transcript of the testimony given by witnesses at the court's investigation to discover assets. In their testimony Benjamin Bros. detailed on oath their purchase and taking possession of the goods on December 24, 1912.

E. N. Zoline, of Chicago, Ill., for petitioner.

Martin J. Isaacs, of Chicago, Ill., for respondent.

Before BAKER, SEAMAN, and MACK, Circuit Judges.

BAKER, Circuit Judge (after stating the facts as above). [1] Jurisdiction to review a summary order in bankruptcy proceedings is by original petition under section 24b. Mueller v. Nugent, 184 U. S. 1, 22 Sup. Ct. 269, 46 L. Ed. 405; In re Blum, 202 Fed. 883, 121 C. C. A. 241; Shea v. Lewis, 206 Fed. 877, 124 C. C. A. 537; In re Yorkville Coal Co., 211 Fed. 619, 128 C. C. A. 570.

[2] "There are two classes of cases arising under the act of 1898 and controlled by different principles. The first class is where there is a claim of adverse title to property of the bankrupt, based upon a transfer antedating the bankruptcy. The other class is where there is no claim of adverse title based on any transfer prior to the bankruptcy, but where the property is in the physical possession of a third party, or of an agent of the bankrupt, or of an officer of a bankrupt corporation, who refuses to deliver it to the trustee in bankruptcy. In the former class of cases a plenary suit must be brought, either at law or in equity, by the trustee, in which the adverse claim of title can be tried and adjudicated. In the latter class it is not necessary to bring a plenary suit, but the bankruptcy court may act summarily and may make an order in a summary proceeding for the delivery of the property to the trustee, without the formality of a formal litigation." Babbitt v. Dutcher, 216 U. S. 102, 30 Sup. Ct. 372, 54 L. Ed. 402, 17 Ann. Cas. 969.

As the claim of Benjamin Bros. was "based upon a transfer antedating the bankruptcy," it belonged to the class requiring a plenary suit, unless the claim was merely "colorable."

[3] The District Court may pursue the summary method to the point of ascertaining that the alleged adverse claim is substantial and not merely colorable. But substantiality appears as soon as the claimant, in response to the rule to show cause, presents his verified answer, which is unmet by the trustee, or which, if met by a replication, is

supported by sworn testimony of facts which, if true, would show title and possession antedating the petition in bankruptcy. A conclusion that the alleged adverse claim is a cover for the claimant's possession as agent or bailee of the bankrupt cannot be permitted to be reached by the District Court's rejection of the sworn answer and testimony, and thereupon finding that the alleged adverse claim is fraudulent. That end can only be attained if it is the just conclusion of a due trial of a plenary suit. Cases supra.

The order is reversed, with the direction to dismiss the summary proceeding.

(216 Fed. 889)

In re GOLDSTEIN et al. PELLER v. CENTRAL TRUST CO.

MOSESON v. SAME.

(Circuit Court of Appeals, Seventh Circuit. August 12, 1914.)

Nos. 2018 and 2019.

BANKRUPTCY (§ 288*)—ASSETS—OWNERSHIP—TRANSFER—SUMMARY PROCEEDINGS.

Where, in a proceeding by a bankrupt's trustee to recover assets transferred by the bankrupts to the claimants, they appeared and objected to summary disposition of their rights, denied that they had obtained or held possession as the bankrupts' agent or bailee, and filed answers and gave testimony of facts which, if true, showed title and possession in themselves prior to the institution of bankruptcy proceedings, it was the duty of the court to dismiss the proceeding and remit the trustee to its remedy by plenary action.

[Ed. Note.—For other cases, see Bankruptcy, Cent. Dig. § 447; Dec. Dig. § 288.*]

Petitions to Review and Revise Order of the District Court of the United States for the Eastern Division of the Northern District of Illinois, in Bankruptcy.

In the matter of bankruptcy proceedings of Morris Goldstein and Benjamin Moseson. Separate proceedings by the Central Trust Company against Sam Peller and against Ida Moseson to recover possession of assets alleged to be in the possession of the defendants. On petitions to review and revise orders overruling objections to the trial of the issue by summary proceedings in bankruptcy. Reversed.

B. M. Shaffner, of Chicago, Ill., for petitioner Peller.

Bernard J. Brown, of Chicago, Ill., for petitioner Moseson.

Martin J. Isaacs, of Chicago, Ill., for respondent.

Before BAKER, SEAMAN, and MACK, Circuit Judges.

BAKER, Circuit Judge. Peller in one case and Ida Moseson in the other were in possession of property which they respectively had obtained from Goldstein and Moseson before the involuntary petition in bankruptcy was filed. Each objected to a summary disposition of his rights, denied that he obtained or held possession as agent or bailee of Goldstein and Moseson, and filed answers and gave testimony of facts which, if true, showed title and possession in himself prior to the institution of the bankruptcy proceeding.

---

*For other cases see same topic & § NUMBER in Dec. & Am. Digs. 1907 to date, & Rep'r Indexes

For the reasons given in cause No. 2016, 216 Fed. 887, 133 C. C. A. 91, herewith decided, the order in each of these cases is reversed, with the direction to dismiss the summary proceeding.

(216 Fed. 890)

In re LUKEN.

McKEY v. STEGER.

(Circuit Court of Appeals, Seventh Circuit. August 12, 1914.)

No. 2062.

BANKRUPTCY (§ 288*)—LIENS—TRIAL—SUMMARY PROCEEDINGS.

Where a claimant's right to hold certain cloth seized under a distress warrant against a bankrupt prior to the institution of bankruptcy proceedings depended on the determination of the legal question whether the lien was indisputably obtained through legal proceedings within four months prior to the filing of the petition, as provided by Bankr. Act July 1, 1898, c. 541, § 67f, 30 Stat. 564 (U. S. Comp. St. 1901, p. 3450), the claim of the validity of such lien on undisputed facts was not so void of color as to authorize the bankruptcy court to determine it by summary proceedings over claimant's protest.

[Ed. Note.—For other cases, see Bankruptcy, Cent. Dig. § 447; Dec. Dig. § 288.*]

Petition to Review and Revise Order of the District Court of the United States for the Eastern Division of the Northern District of Illinois, in Bankruptcy; George A. Carpenter, Judge.

In the matter of bankruptcy proceedings of William M. Luken. Proceeding by Frank M. McKey, as the bankrupt's trustee, to recover 100 bolts of cloth seized by John V. Steger under a distress warrant prior to bankruptcy. Claimant objected to the maintenance of summary proceedings, which were thereupon dismissed, whereupon the trustee filed a petition to review and revise. Affirmed, and petition dismissed on its merits.

Harry L. Shaver, of Chicago, Ill., for petitioner.

Allen G. Mills, of Chicago, Ill., for respondent.

Before BAKER, SEAMAN, and MACK, Circuit Judges.

BAKER, Circuit Judge. On July 24, 1913, an involuntary petition in bankruptcy was filed against Luken. Shortly afterwards he was adjudicated a bankrupt and McKey was elected trustee. About three weeks before the institution of the bankruptcy proceedings respondent Steger had caused a distress warrant to be served upon Luken, and had seized 100 bolts of cloth then belonging to Luken. The following October the trustee filed a petition in the bankruptcy court praying for a summary order upon Steger to turn over to the trustee the 100 bolts of cloth seized by Steger under the distress warrant. Steger entered his special appearance to contest the summary jurisdiction of the bankruptcy court, and alleged that prior to the institution of the bankruptcy proceedings he was in the actual possession of the 100 bolts of cloth and was asserting his right to retain possession by virtue of the distress warrant. On a hearing of the summary petition and the

*For other cases see same topic & § NUMBER in Dec. & Am. Digs. 1907 to date, & Rep'r Indexes

plea to the jurisdiction, the referee found that Steger at and before the filing of the petition in bankruptcy was in possession of the property in question, claiming a lien thereon adversely to the bankrupt, and thereupon dismissed the petition for want of summary jurisdiction. This order of dismissal was confirmed by the bankruptcy court, and the correctness thereof is presented to us by this original petition to review and revise.

In the Case of Goldstein and Moseson, 216 Fed. 887, 133 C. C. A. 91, No. 2016, herewith decided, we held that a controversy between the trustee and a person who prior to the bankruptcy proceedings was in the actual possession of property under a claim of right should not be determined by the bankruptcy court under its summary jurisdiction against the protest of the adverse holder unless the adverse claim was without color. We found the adverse claim in that case to be substantial because in respect to the facts there was a conflict which, over the adverse claimant's protest against summary process, could only be settled properly in a plenary suit. In the present proceeding there is no conflict about the facts, and the trustee therefore contends that the bankruptcy court had summary jurisdiction to compel Steger to surrender possession by the summary process of a contempt order or other summary means. His argument is that, inasmuch as the distress warrant was served within four months prior to the filing of the petition in bankruptcy, it was therefore a lien through legal proceedings which was rendered null and void by section 67f of the Bankruptcy Act. In the case of a judgment or an attachment or other lien which was indisputably "obtained through legal proceedings" within four months prior to the filing of the petition in bankruptcy, the legal proceedings being taken against the defendant therein while the defendant was insolvent, we might have no difficulty, the facts being undisputed, in determining that the adverse holder's claim of legal right to retain possession was so clearly without substance, so void of color, as to bring him within the summary jurisdiction of the bankruptcy court. But it seems to us that a controversy may be as substantial in regard to the legal rights of a party on undisputed facts as is a controversy wherein the only conflict is on the facts. Our observation and experience is that there are fully as many controversies in plenary suits over the question of legal rights on undisputed facts as there are controversies respecting the facts. Among the bankruptcy cases we have found no precedents wherein this question has been considered; but in our opinion precedents in the Supreme Court concerning its own jurisdiction are so analogous that they are applicable. In determining whether a writ of error from the highest court in a state is entertainable, the Supreme Court considers whether the asserted legal right is substantial or merely colorable. If, on the undisputed facts, the asserted legal right is only a bare assertion, if it has no basis whatever in reason to sustain it, or if it is an assertion in the face of a clear and thoroughly settled line of adjudications in that court, the jurisdiction is denied and the writ is dismissed. New Orleans Water Works v. Louisiana, 185 U. S. 336, 22 Sup. Ct. 691, 46 L. Ed. 936; Equitable Assurance Society v. Brown, 187 U. S. 308, 314, 23 Sup. Ct. 123, 47

L. Ed. 190; Deming v. Carlisle Packing Co., 226 U. S. 102, 33 Sup. Ct. 80, 57 L. Ed. 140; Consolidated Turnpike Co. v. Norfolk & Ocean View Railway Co., 228 U. S. 596, 600, 33 Sup. Ct. 605, 57 L. Ed. 982; United States ex rel. Brown v. Lane, 232 U. S. 598, 34 Sup. Ct. 449, 58 L. Ed. 748. On the other hand, the reports abound in cases where on undisputed facts there have been most substantial controversies respecting legal rights.

In the present case the distress warrant certainly was not a judgment or an attachment. If it comes at all within section 67f, it comes under the heading "Other Liens Obtained through Legal Proceedings." This is a very general expression, and its applicability to the distress warrant can only be determined by solving the problem whether the lien of a distraint in Illinois is obtained through legal proceedings. In support of his contention that the landlord's lien is obtained through legal proceedings, the trustee cites the Illinois statutes and numerous Illinois decisions, and relies particularly on In re Joslyn, 2 Biss. 235, Fed. Cas. No. 7,550, and Morgan v. Campbell, 22 Wall. 381, 22 L. Ed. 796, both cases under a previous bankruptcy law, while the respondent cites Illinois decisions and federal cases in various circuits, and relies particularly on Henderson v. Mayer, 225 U. S. 631, 32 Sup. Ct. 699, 56 L. Ed. 1233, under the present bankruptcy law as applied to provisions of the Georgia Code, which the respondent contends are much less favorable to the landlord's contention that his lien is one not obtained through legal proceedings than are the provisions of the Illinois statutes. We have looked into the question of the merits of respondent's lien to the extent of being satisfied that an answer could be given only after a most careful study and consideration of the numerous cases cited, and after a comparison of the Georgia provisions with those of Illinois in order to determine whether Henderson v. Mayer is of controlling effect upon respondent's asserted legal right. In short, we are quite satisfied that the controversy presented by the adverse claimant herein is a very substantial one.

The order of the District Court in dismissing the summary proceeding was correct, and this petition to review and revise that order is therefore dismissed on the merits.

(216 Fed. 892)

CONLEY CAMERA CO. v. MULTISCOPE & FILM CO.†

(Circuit Court of Appeals, Eighth Circuit. July 27, 1914.)

No. 4172.

1. PLEADING (§ 367*)—INDEFINITENESS OF COMPLAINT—WAIVER OF OBJECTION.

Under Gen. St. Minn. 1913, § 7770, which provides that, "if the allegations of a pleading are so indefinite or uncertain that the precise nature of the charge or defense is not apparent, the court may strike it out on motion or require it to be amended," objection to pleadings for such defects must be taken by motion, and cannot be raised for the first time in an appellate court.

[Ed. Note.—For other cases, see Pleading, Cent. Dig. §§ 64, 1173–1193; Dec. Dig. § 367.*]

*For other cases see same topic & § NUMBER in Dec. & Am. Digs. 1907 to date, & Rep'r Indexes

† Rehearing denied October 5, 1914.

2. CONTRACTS (§ 10*)—VALIDITY—MUTUALITY OF OBLIGATION.
A contract by which one party pays a valuable consideration to the other party, who agrees to sell to the first party all of a certain class of goods he may wish to buy, is not invalid, for want of mutuality, because the first party does not obligate himself to purchase.
[Ed. Note.—For other cases, see Contracts, Cent. Dig. §§ 21–40; Dec. Dig. § 10.*]

3. CONTRACTS (§ 10*)—VALIDITY—MUTUALITY OF OBLIGATION.
A contract by which the sole maker of a patented article agrees to supply such articles to a dealer having an established trade therein is not invalid, for want of mutuality, because the dealer does not expressly obligate himself to buy from the other party.
[Ed. Note.—For other cases, see Contracts, Cent. Dig. §§ 21–40; Dec. Dig. § 10.*
Mutuality in contracts, see notes to American Cotton Oil Co. v. Kirk, 15 C. C. A. 543; Oakland Motor Co. v. Indiana Automobile Co., 121 C. C. A. 326.]

4. PATENTS (§ 216*)—CONTRACTS—VALIDITY—CERTAINTY—TIME OF PERFORMANCE.
A contract by the owner of a patent, who is the sole manufacturer of the patented article, to supply the same to a dealer as required, is not invalid because no length of time is specified, but will be construed as intended to remain in force during the life of the patent.
[Ed. Note.—For other cases, see Patents, Cent. Dig. § 329; Dec. Dig. § 216.*]

5. SALES (§ 416*)—ACTION FOR BREACH OF CONTRACT—EVIDENCE.
In an action for breach of a contract by defendant to supply plaintiff with such quantities of a certain style of patented camera as plaintiff might order, evidence that the cameras designated were imperfect, and not usable or salable without improvement, was not matter of defense, but was immaterial.
[Ed. Note.—For other cases, see Sales, Cent. Dig. §§ 1171, 1172; Dec. Dig. § 416.*]

In Error to the District Court of the United States for the District of Minnesota; Charles A. Willard, Judge.

Action at law by the Multiscope & Film Company against the Conley Camera Company. Judgment for plaintiff, and defendant brings error. Affirmed.

Charles Lederer, of Chicago, Ill. (Sidney Adler, of Chicago, Ill., and Tawney, Smith & Tawney, of Winona, Minn., on the brief), for plaintiff in error.

Edward Lees, of Winona, Minn. (M. B. Webber, of Winona, Minn., and Simmons & Walker, of Racine, Wis., on the brief), for defendant in error.

Before SANBORN, Circuit Judge, and TRIEBER and REED, District Judges.

TRIEBER, District Judge. The plaintiff sought to recover damages for the breach of two contracts, one executed on November 20, 1907, and the other on December 2, 1908; but as the court below held that there could be no recovery on the first contract, and the cause was tried solely for the alleged breach of the second contract, the first need not be considered.

*For other cases see same topic & § NUMBER in Dec. & Am. Digs. 1907 to date, & Rep'r Indexes

The complaint alleges the execution of a contract, which is as follows:

"This agreement witnesseth, that the Multiscope & Film Company, a corporation of Wisconsin, first party, has sold and assigned, and by these presents does grant, bargain, sell and assign, to Conley Camera Company, a corporation of Minnesota, second party, for and in consideration of the sum of five hundred dollars ($500.00), and an order for not to exceed nine thousand dollars ($9,000) worth of photographic wooden ware, which second party agrees to pay for within twenty days from date of invoice and acceptance, the receipt of which is hereby acknowledged, all those letters patent of the United States of America, title to which is now in said first party, granted for improvements in panoramic cameras to various parties, being identified as letters patent of the United States of America #567,559, #671,154, #773,348 and #778,394, and all other letters patent or right to letters patent issued or pending for improvements in panoramic cameras to or in which said first party may have any right, title or interest; also all those goods, merchandise, tools, chattels and dies described in a separate invoice of the same bearing even date herewith, hereto attached and marked 'Exhibit A.'

"In consideration of the sale of said goods, merchandise, tools, chattels and dies by first party to second party, second party agrees that it will continue to sell to first party cameras (manufactured) under said letters patent and known as the 'Al-Vista' panoramic film cameras, at the same prices which first party is now paying to second party for such cameras, subject to a pro rata advance in case of an advance in cost of materials or labor over present prices, irrespective of quantities.

"This agreement not to be construed as intending that second party shall sell only to first party, it being the intention that said second party may sell such cameras without restriction, except that it is hereby expressly agreed that, so long as first party shall continue to purchase such cameras from second party, neither first party nor second party shall give or allow in any way greater discounts from the list price of such cameras than the following:

"To the jobbing trade 40 per cent. and 25 per cent., equivalent to 55 per cent.

"To retail dealers 40 per cent.

"To consumer or user 20 per cent.

"Above discounts shall not bind party of the first part on sale of such cameras known as 5-F style which it now has on hand.

"List prices of various styles of said cameras shall from time to time be established by party of second part, not to exceed once each year, by mutual consent. It is further agreed that this agreement as to discount shall not apply to cameras sold to Sears, Roebuck & Co., and that there shall be no restriction as to the prices at which said cameras may be sold to Sears, Roebuck & Co.

"It is further understood and agreed that in case first party shall at any time give or allow, directly or indirectly, to any purchaser from it of cameras sold to it by second party, and discounts, rebates, premiums, bonus or deductions in price which in the aggregate shall reduce the price to such purchaser to a less amount than the amount above agreed upon, or in case first party shall sell its business or shall cease doing business at any time, or in case the holders of a majority of the shares of stock of first party shall sell or dispose of a majority of said stock, then this agreement as to the sale of cameras by second party to first party shall cease and determine.

"Further agreed and understood that this contract is not assignable on party of the first part, but that it shall bind the successor and assigns of the party of the second part.

"Dated this 2d day of December, 1908.

"Multiscope & Film Co.
"By Leonard J. Smith, Pres.
"Conley Camera Company,
"By Kerry Conley."

It is further alleged that after the execution of the contract the plaintiff complied in all respects with the terms thereof, but that the

defendant furnished only a small portion of the cameras, and then refused to ship any more of the cameras, although frequently requested by the plaintiff to do so, and informed that the plaintiff required the cameras mentioned in order to supply its trade and fill orders from its customers; that the plaintiff had a regular and established business in the said "Al-Vista" panoramic cameras, which, by reason of the refusal of the defendant to fill its orders, was destroyed. There are also allegations in the complaint as to the breach of the first contract, which, for the reasons above stated, it is unnecessary to set out herein.

The answer of the defendant admits the execution of the contract and sets up as a defense that the "Al-Vista" cameras made under the patents of the plaintiff were imperfect and incomplete, and could not be successfully operated, used, or sold. It also denies that the plaintiff has performed its part of the contract, and also contains a general denial.

There was a trial and a verdict in favor of the plaintiff for the damages sustained, but the damages were confined by the court to the profits the plaintiff would have made on the orders it actually received for these cameras, but which it could not fill owing to defendant's refusal to furnish them.

[1] Before the cause was to be tried the defendant moved for a judgment on the pleadings, which was overruled after the plaintiff had amended its complaint. In our opinion, the complaint, as amended, is sufficient, although, had the defendant, at the proper time, made a motion to have it made more specific, the court would no doubt have granted it. Section 7770, Gen. St. Minn. 1913, provides that:

"If the allegations of a pleading are so indefinite or uncertain that the precise nature of the charge or defense is not apparent, the court may strike it out on motion, or require it to be amended."

The defendant made no motion, before the trial, to require the complaint to be made more definite and certain, and it is too late to raise it in the appellate court. Barker v. Foster, 29 Minn. 166, 12 N. W. 460; Truesdell v. Hull, 35 Minn. 468, 29 N. W. 72.

[2] It is also insisted that judgment should have been rendered in its favor on the pleadings, because the contract is void for want of mutuality, and that there is no definite time within which it is to be performed. It is true that an executory contract without any express consideration passing to the party who undertakes to sell certain property or perform certain services, when there is no corresponding obligation on the other party, will be void for want of mutuality. But this rule does not apply when there is a valuable consideration paid by the one party to the other party who obligates himself to do a certain thing. In Joy v. St. Louis, 138 U. S. 1, 50, 11 Sup. Ct. 243, 258 (34 L. Ed. 843), the court quotes the following excerpt from the opinion of Mr. Justice Brewer, then Circuit Judge, delivered in that case in the Circuit Court:

"As to the objection that there is no mutuality in the contract, and therefore it cannot be enforced, the Circuit Court says in its opinion: 'As to the objection on the ground of the want of mutuality in the contract, I think it of little force. The respondent has been paid for the privilege that is now claimed. The consideration, as I have heretofore shown, was ample; and,

when a party has received payment for a privilege, I do not think it can resist the enforcement of that privilege on the mere ground that it cannot compel the other party to continue in its enjoyment.' We concur in this view."

Option contracts, whereby a party obligates himself, for a valuable consideration, to convey certain property, are of everyday occurrence. In none of them is there any obligation on the part of the would-be purchaser to make the purchase, that being discretionary with the party to buy. But the obligor, having received a valuable consideration, cannot be heard to defeat the contract because the obligations are not mutual, as is the case where the sole consideration is a promise for a promise. Pomeroy on Sp. Per. § 169; Willard v. Tayloe, 8 Wall. 557, 19 L. Ed. 501; Watts v. Kellar, 56 Fed. 1, 4, 5 C. C. A. 394, 397; Marthinson v. King, 150 Fed. 48, 51, 82 C. C. A. 360; Hoogendorn v. Daniel, 178 Fed. 765, 102 C. C. A. 213.

[3] In the instant case the plaintiff was necessarily compelled to buy all the "Al-Vista" cameras it needed to supply its customers from the defendant, as it alone, as the assignee and owner of all the patents under which they could be made, could manufacture them. Therefore, by necessary implication, the contract compelled the plaintiff to purchase from the defendant all these cameras which it required as long as the patents were alive. This is sufficient. Cold Blast Transp. Co. v. Kansas City Bolt & Nut Co., 114 Fed. 77, 52 C. C. A. 25, 57 L. R. A. 696; Loudenback Fertilizer Co. v. Tennessee Phosphate Co., 121 Fed. 298, 58 C. C. A. 220, 61 L. R. A. 402; Sterling Coal Co. v. Silver Spring B. & D. Co., 162 Fed. 848, 89 C. C. A. 520; Golden Cycle Min. Co. v. Rapson Coal Min. Co., 188 Fed. 179, 112 C. C. A. 95.

The fact that there is no limit to the time within which the contract is to cease does not vitiate it, in view of the facts here existing. In Pierce v. Tennessee Coal & Iron R. R. Co., 173 U. S. 1, 19 Sup. Ct. 335, 43 L. Ed. 591, the railroad company had obligated itself, for a valuable consideration, to give the plaintiff employment at such work as he could do at a certain salary per month, without specifying the length of time the employment was to continue. It thereafter discharged him. It was claimed that the contract was for a hiring from month to month; otherwise, being for an indefinite time, it was void. But the court construed it as being a contract of employment as long as he was unable to do full work and therefore the company was liable for a breach thereof when it discharged the plaintiff while he was still unable to do full work. The Supreme Court of Alabama, in construing the same contract, held that:

"The contract is sufficiently definite as to time, and bound the defendant to its performance so long as the plaintiff should be disabled by reason of the injuries he received, which, under the averment that he was permanently disabled, will be for life."

In that opinion the Supreme Court of the United States concurred. 173 U. S. 10, 19 Sup. Ct. 335, 43 L. Ed. 591. To the same effect is Smith v. Duluth, etc., Ry. Co., 60 Minn. 330, 62 N. W. 392.

[4] In the case at bar, the cameras being made under patents of the United States, the plaintiff after having assigned these patents, and sold all the dies and tools necessary to make them, could not manufacture them itself, nor could it secure them from any other

person during the life of the patents. It is therefore a reasonable construction of the contract, in view of the rule laid down in the Pierce Case, that it was limited to the life of the patents, for thereafter others could manufacture them, and plaintiff obtain cameras from them.

In McKell v. Chesapeake & O. R. R. Co., 175 Fed. 321, 330, 99 C. C. A. 109, 118 (20 Ann. Cas. 1097), the court held that such a contract was valid, saying:

"A more conclusive answer is that it should have been considered by the parties when they made their agreement whether it would impose too great a hardship upon them."

[5] It is also claimed that the plaintiff was estopped, but there is no such plea in the answer. Nor was there any proof to establish an estoppel. The allegation that the "Al-Vista" camera was imperfect can hardly be considered as a plea of estoppel. But, assuming that the defendant had amended its answer by pleading an estoppel, the court did not err in excluding evidence offered by the defendant that the "Al-Vista" camera was imperfect. For the reasons stated by the learned trial judge in excluding the evidence, this claim is untenable. He said:

"There is an allegation that the cameras were imperfect, inferior, and incomplete, and could not be successfully operated, used, or sold, and that, in order for defendant to manufacture and successfully dispose of said cameras to the trade, it became necessary for the defendant to make many changes and improvements in the construction of said cameras. That might have been necessary in order to sell to the trade other than the plaintiff; but, so far as the plaintiff was concerned, it was bound to take the cameras as they were made at first."

If the cameras purchased by the plaintiff were imperfect, the loss would fall upon it, and not on the defendant.

It is next claimed that the court erred in admitting the evidence offered by the plaintiff as to the measure of damages. The contention is that it was unsatisfactory, and that the books of the plaintiff ought to have been introduced, to show the exact cost of handling them for the trade. If the plaintiff's testimony as to the expenses of sale was unsatisfactory, the defendant had an opportunity to introduce evidence to rebut it. Nor was it necessary for the plaintiff to testify from his books as to the measure of damages. It appears from the record that the books of the plaintiff were in court at the trial, or, if not there, they could have been procured by a subpœna duces tecum, and defendant could have had them introduced, or, on cross-examination of plaintiff's witnesses on that point, have had them refer to the books. The testimony of plaintiff as to the damages was limited by the trial court to the profits on orders for the "Al-Vista" cameras which it had actually received before the institution of this action, but could not fill owing to defendant's refusal to furnish them, as it had agreed to do by its contract of December 2, 1908, less the expense connected with the sales. The defendant was permitted to show on cross-examination that there were overhead expenses, which had not been included by plaintiff's witnesses in estimating the expense of sale, and what these expenses were. It was also permitted, on cross-examination of plain-

tiff's witnesses, to show what cameras were returned by customers as defective, and therefore no profit made on them. These facts were evidently considered by the jury in assessing the damages, as their verdict is for several hundred dollars less than the amount claimed by plaintiff's witnesses on their direct examination. The damages originally claimed by plaintiff were for $18,500; the damages claimed, after the court had limited them to the net profits on the cameras, for which the plaintiff had received orders from its customers, but could not fill owing to defendant's breach of the contract, as shown by the direct testimony of its witnesses, exceeded $1,500. But no doubt, after considering the overhead expenses and the conflicting evidence on that point, the jury assessed the damages at $1,287.50. Upon a motion for a new trial, the trial court approved that finding.

The record fails to show any error prejudicial to the defendant, and the judgment is therefore affirmed.

(216 Fed. 898)

SPIRELLA CO. v. NUBONE CORSET CO. et al.

(Circuit Court of Appeals, Third Circuit. August 27, 1914.)

No. 1827.

1. PATENTS (§ 328*)—VALIDITY—CORSET STAYS.

The Beeman patent, No. 1,002,488, for a method of making garment stays, *held* void for lack of patentable novelty in view of the disclosures of the prior art.

2. PATENTS (§ 16*)—INVENTION—CARRYING FORWARD OLD IDEA.

The mere carrying forward of an old idea and doing what had been done before in substantially the same way, but with possibly better results, is a change not involving invention.

[Ed. Note.—For other cases, see Patents, Cent. Dig. §§ 14, 15; Dec. Dig. § 16.*]

Appeal from the District Court of the United States for the Western District of Pennsylvania; Charles P. Orr, Judge.

Suit in equity by the Spirella Company against the NuBone Corset Company, a New Jersey corporation, the NuBone Corset Company, a Pennsylvania corporation, George H. Barlow, and Joseph J. Desmond. Decree for defendants, and complainant appeals. Affirmed.

Frederick W. Winter, of Pittsburgh, Pa., and Charles Neave, of New York City, for appellant.

J. C. Sturgeon, of Erie, Pa., and Joseph C. Fraley, of Philadelphia, Pa., for appellees.

Before BUFFINGTON and McPHERSON, Circuit Judges, and WITMER, District Judge.

WITMER, District Judge. This bill in equity charges the defendants with infringement of letters patent No. 1,002,488, granted September 5, 1911, on application filed November 30, 1908, to complainant, as assignee of Marcus M. Beeman, for improvement in method of making garment stays. The usual defenses, denial of infringement, averments of prior use of the alleged invention, and invalidity of the letters patent, have been interposed.

---

*For other cases see same topic & § NUMBER in Dec. & Am. Digs. 1907 to date, & Rep'r Indexes

The parties herein are rival manufacturers of corset stays and corsets, and have before been in this court in a suit wherein these same complainants contended that the corset stay made by defendants in accordance with letters patent No. 868,763, granted to John R. Dean, October 22, 1907, for a corset stay made on the John R. Dean Stay Making Machine, patented December 6, 1910, to No. 977,515 on his application filed January 16, 1908, infringed letters patent No. 507,-875, granted to Marcus M. Beeman, October 31, 1893, for dress stay, and letters patent No. 645,444 granted to John P. F. White and Samuel S. Rider, March 13, 1900, for a corset stay stiffener, both of which patents were then owned by the complainant. A decision was therein rendered ordering a decree to be entered against the complainant dismissing the bill. 183 Fed. 984, 106 C. C. A. 324.

The alleged infringement of the present suit consists in the making on the Dean machine the Dean corset stay. It will be noted that the Dean machine patent antedates the application of the patent in suit, but it is said that stays were not commercially made on it until some time thereafter, and that the same was also anticipated by the Beeman improvement method. Be this as it may, in view of the conclusion reached it will not be necessary to discuss this aspect of the case.

[1] The patent in suit is for a method of making wire garment stays, the essential features of which consist in imparting to the wire, during the manufacture of the stay, a twist or torsional strain in order to increase the resistance of the stay against flatwise bending stresses in one direction as compared with the other, and also to increase the resiliency of the stay and its ability to resist a permanent set under bending stresses, as a result of which a stay of given strength can be formed of lighter wire than similar stays before manufactured.

The first claim of the patent only is here involved. This specifies the method in connection with a particular form of wire stay, to wit, one in which the wire is bent at intervals in opposite directions to form curved edge-forming loops or eyes and transverse connecting portions.

Claim 1 refers to the method as:

> "The method of forming garment stays consisting in bending wire at intervals and alternately in opposite directions to form curved edge-forming loops or eyes and transverse connecting portions, and while so bending the edge-forming loops or eyes imparting a twist to the wire and thereby placing the same under initial torsional strain."

It will be noted that the form of stay to which the claim relates is one having a zigzag formation of the wire, as distinguished from one having a spiral formation or in which the curve runs continuously in the same direction. It is said that, if in this zigzag form of wire stay the wire is given a twist in the transverse portions or crossings of the stay, this will impart rigidity and resiliency to the stay as a whole when bent in one direction, and the patent in suit is for a method for producing this form of stay with a twist placing the wire under initial torsional strain. The patentee says that the bending may be performed in any suitable way and shows how it may be carried out by mechanical means, as follows:

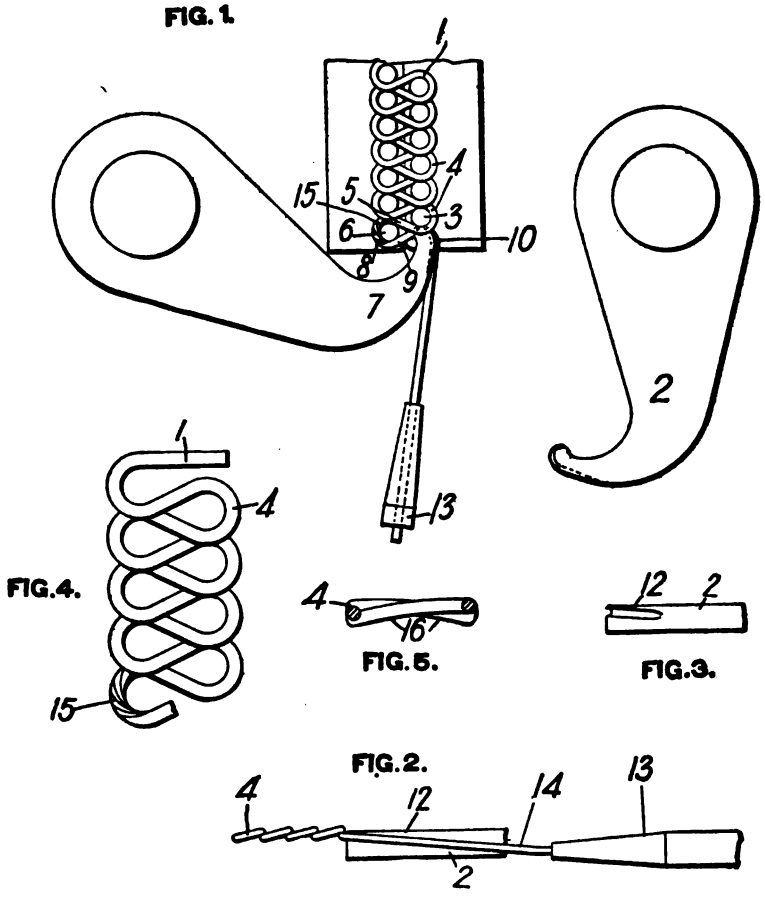

"As shown, the wire is taken by a finger *2* and bent around a pin *3* to form a loop or eye *4*, and is carried by said finger across the stay, as at *5*, and carried over another pin *6* which then rises, and the wire is caught by the opposite finger *7* and bent around said pin *6* to form a loop or eye *8* on the opposite side of the stay, and is then again carried across the stay, as at *9*, and depressed and carried underneath the previously formed loop *4*, as at *10*. The bending as shown is performed by the bending fingers *2* and *7* having on their ends sloping or inclined lips *12* which serve to press the wire downwardly while bending the same around one of the pins and carrying the same across the stay. The unformed portion of the wire is held by the guide *13* inclined downwardly from the plane of the formed portion of the stay, as shown at *14*, Fig. 2, and consequently the portion of the stay forming the loops or eyes is formed on a spiral running upwardly, relatively speaking, while the transverse connecting portions are on a spiral running downwardly, due to the action of the inclined lips *12* of the bending fingers which force the wire underneath a previously formed loop or eye. The consequence is that the wire is twisted at the loops, as indicated by the spiral shade lines *15*, Figs 1 and 4, and is thereby put under an initial torsional strain. The loops of the fabricated portion of the wire are inclined or tilted from the plane of the stay, as shown in Fig. 2, while the unformed portion of the wire stands at the opposite angle or inclination from the plane of the stay. Consequently when the wire is carried across from side to side and

the eye is tilted to bring it to the inclined position, a certain amount of twist is necessarily given to the wire. This places the wire under an initial torsional strain. This manner of forming the stays, that is, by holding the unformed portion of the wire at an incline to the formed portion of the stay, and carrying the wire across the stay and simultaneously bending it down, results in depressing the edges of the loops or eyes below the normal plane of the stay, so that the finished stay is somewhat concave on its lower side, as shown at *16*, Fig. 5."

The bended loops in the inclined position relative to the plane of the stay, so that each loop may slightly overlap the next one and the series of loops along either edge will have the shingled arrangement, in ribbon form somewhat concave on its lower side, it will be observed, is the characteristic feature of the stay described. It is obvious that whenever wire is bent to this form the same result will follow, to wit, a twisted condition of the wire. Now, therefore, if instrumentalities of the character shown in the Beeman method patent were formerly used, as contended by the defendants, for the manufacture of garment stays, the method covered in the patent was necessarily practiced. It appears that dress stays made from wire bent substantially to the form shown in the patent under consideration with alternating reversely bent loops along edge connected by cross-portions, with the loops inclined to the plane of the stay and overlapped and shingled, were known long prior to this patent. It is useless to note any others since Beeman's own patent of stay, heretofore noted, is the best embodiment of the features involved. The wire is bent to the same form as that shown in his method patent, and, while an edge view is not shown in the earlier patent corresponding to Fig. 4 of the patent in suit, it is obvious from the plain view, as well as from the description of the construction, that the loops overlapped one another at each edge of the strip, necessarily inclining them to the general plane of the strip, bringing them into the shingled relation to one another as represented.

M. M. Beeman Dress Stay

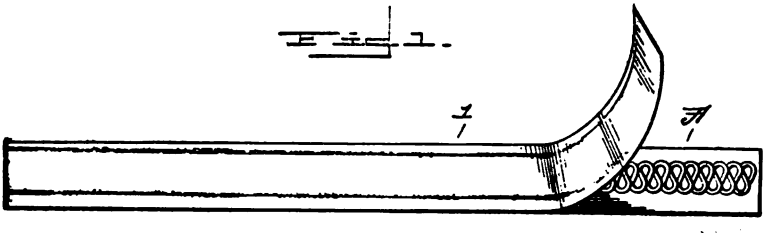

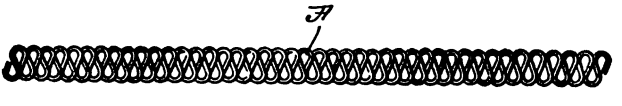

That these stays were manufactured, whereby the method of imparting the twist to the wire resulting in the "initial torsional twist and set" claimed in the patent was necessarily involved, has been sufficiently evidenced by the product from a machine patented to manufacture these stays. This machine was invented by Mr. Mallett, patented long before the patent in suit, and discloses the instrumentalities for bending the wire to the form shown by both of Beeman's patents, which sufficiently appears from an inspection of the following drawings:

F. W. Mallett Machine for Forming Metallic Stays for Garments.

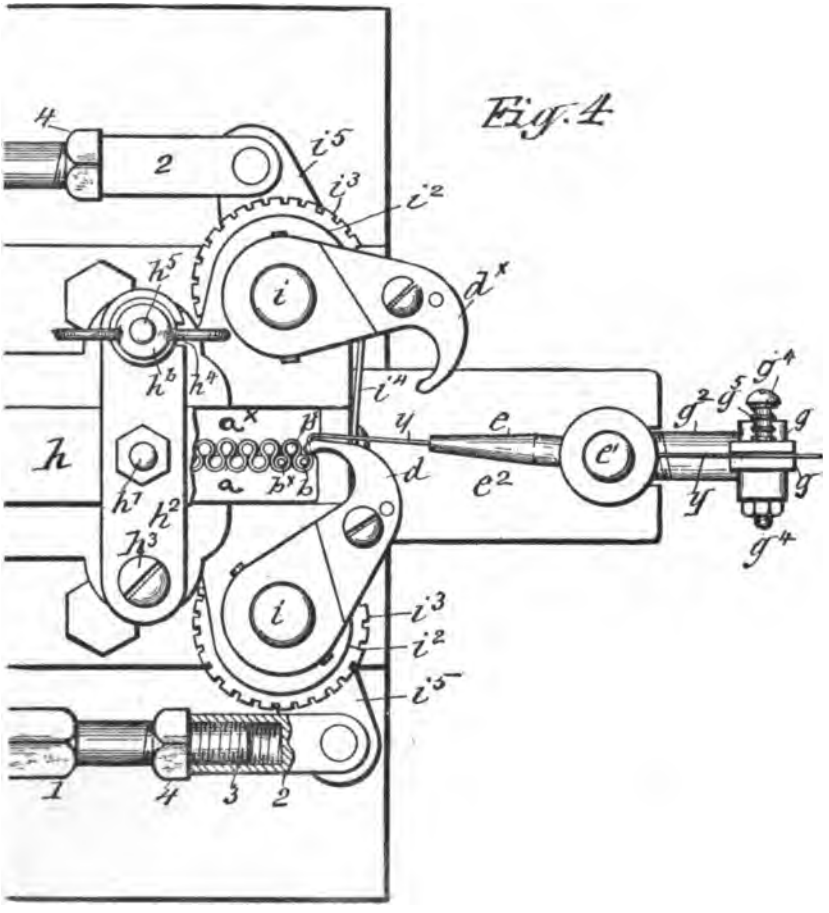

The operation of the instrumentalities in bending the wire into form of a stay is described by the patentee in such a manner that there can hardly be any line of distinction drawn between the method of Beeman and the usual result of the operation of the Mallett machine. In the specifications the patentee says:

"The machine being then set in motion causes the finger *d* to swing in across the end of the bar *a* and push the wire inward over the front pin *b* of the depressed bar a^x, where it leaves the wire in the shape of a partly formed loop, while the finger *d* swings back out of the way of the bar a^x, which then rises and causes its front pin to enter into the said partly formed loop. Then the bar *a* descends and releases the wire from the front pin of said bar. Then the finger d^x swings in and pushes the wire over the front pin of the depressed bar *a*, which then rises and causes its front pin to catch in the partly formed loop of the wire over said bar. This completes the first loop on the bar *a*. The second loop is formed by the action of the finger *d*. In the release of the loop from the front pin *b* the wire is allowed to slip longitudinally and causes the released loop to be caught on the rear pin b^x, and thus form the loops contiguously side by side and slightly overlapping. The continuation of the alternate action of the bars and fingers forms a metallic band composed of correspondingly shaped loops disposed alternately in reversed positions. The notches *d'* of the fingers *d* d^x receiving the wire through them and being slightly below the top of the raised bar causes the fingers to bend the wire down across the inner edges of the bars, and thus produce a transverse convexity on the underside of the metallic band formed from the wire. This convexity partly stiffens the said band on one of its sides and increases the flexibility on the opposite side. This feature is especially desirable when the described metallic band is to be used for stays."

Complainants admit the use of Mallett's machine as an instrument in carrying out their process in the manufacture of stays, but they argue that they have only been able to impart the twist of the wire resulting in "initial torsional strain and set" by readjustment of the machine, and they point to the curling up of the ribbon-like stay after passing through the bending process as an evidence of the torsional strain imposed. It will, however, be noted that the Mallett patent also speaks of this curling of the wire, and indeed the machine is provided with means to flatten or straighten out the fabric after it is bent into form. While the adjustment of the machine may add some additional twist to the wire in course of manufacture, it is of such little consequence that it would not of itself have been sufficient to suggest the happy thought of the initial torsional twist and set, which has been made the subject of this patent. It is beyond doubt that in the prior use of the Mallett machine, in fabricating the stay some twist was imparted to the wire, since it is not possible to weave wire into the form of a helix without imparting some twist to it. All that can, under the most favorable view of the case, be conceded to the complainant, is that by adjustment of the machine operating as before they may have improved to some degree the stay manufactured by placing the wire under an indefinite degree of additional torsional twist.

[2] However, the simple carrying forward of the old idea, and doing what had been done before, in substantially the same way, but with possible better results, is a change not involving invention. Guidet v. Brooklyn, 105 U. S. 550, 26 L. Ed. 1106. That the slight additional twist imparted by the further adjustment of the machine, and it will be noted that the machine was adjustably provided, does not rise to the dignity of invention is recognized in Torrey v. Hancock, 184 Fed. 61, 107 C. C. A. 79. There it is said that:

"Any changes made were in degree, proportion, or symmetry. The plow of his patent did the same thing in the same way, and by substantially the same means as before, and, although it produced better results, it did not

rise to the dignity of invention." Smith v. Nichols, 21 Wall. 112, 22 L. Ed. 566; Belding Mfg. Co. v. Corn Planter Co., 152 U. S. 100, 14 Sup. Ct. 492, 38 L. Ed. 370.

Supporting their contention that such change or adjustment constituted invention, counsel cited the Telephone Cases, 126 U. S. 1, 8 Sup. Ct. 778, 31 L. Ed. 863. But it will be noted that the subject there discussed differs from all of the essential features of the case in hand. The adjusting of the Mallett machine was used and practiced in its operation to produce the stay manufactured while the adjusting mechanism of the Reis telephone which might have been used to bring about certain new and useful results were not understood and could not be utilized by the inventor so as to transmit speech; hence discovery of their possibilities was held to be invention.

However, if the method of the patent had been to the aim at increasing the amount of twist by adjustment of the Mallett machine, it could likewise not be sustained for the reason that there is nothing in the drawings, specifications, or claim that imparts the necessary information to accomplish this result. Carefully considered, it is but a description of a well-known function, or result of the operation of an old stay making machine, and, without carrying the discussion any further, we think the court below was right in its conclusion that the method set forth in the patent is entirely devoid of novelty in view of the disclosure of the prior art, and the judgment will be affirmed.

(218 Fed. 45)

MARNET OIL & GAS CO. v. STALEY et al.†

(Circuit Court of Appeals, Fifth Circuit. November 30, 1914.)

No. 2610.

1. PARTNERSHIP (§ 5*)—FORMATION—CONTINUANCE OF BUSINESS.

Where complainant corporation was formed and acquired the interest of one of the partners of a firm, and thereafter the corporation and defendant, who had charge of and had been the managing partner of the previous firm, continued to carry on the business, both defendant and the corporation contributing property or the use of it to the joint enterprise, and it being understood that each should share in the profits and losses, and each recognized and treated the other as a partner, a partnership resulted, whether there was an express partnership agreement between them or not.

[Ed. Note.—For other cases, see Partnership, Cent. Dig. §§ 15, 16; Dec. Dig. § 5.*

Power of corporation to form partnership, see note to Wallerstein v. Ervin, 50 C. C. A. 131.]

2. PARTNERSHIP (§ 273*)—DISSOLUTION—ACCOUNTING—RIGHTS OF PARTNER.

Where no period was fixed for the continuance of a partnership between complainant corporation and defendant, and it appeared that defendant had been guilty of misconduct which had seriously prejudiced the business, and that complainant had advanced a large amount more than its

*For other cases see same topic & § NUMBER in Dec. & Am. Digs. 1907 to date, & Rep'r Indexes

† Rehearing denied January 5, 1915.

share of the money required for the operation of the business, complainant was entitled to a dissolution of the firm, and, after payment of firm debts, to an equitable lien on the firm's assets for what was due it from the firm, and also on defendant's interest in those assets for the amount of such overadvancement.‡

3. BANKRUPTCY (§ 149*)—PARTNERSHIP—ADJUDICATION AGAINST ONE PARTNER—ADMINISTRATION OF PARTNERSHIP AFFAIRS.

Under the express provisions of Bankr. Act July 1, 1898, c. 541, § 5, subsec. "h," 30 Stat. 548 (Comp. St. 1913, § 9589), where only one partner of a firm is adjudged a bankrupt, the bankruptcy court does not draw to itself the administration of the partnership estate, except by consent of the solvent partner, who, in the absence of such consent, is entitled to administer the partnership business, being required only to account to the bankrupt's trustee for the bankrupt's interest in the business as finally determined.

[Ed. Note.—For other cases, see Bankruptcy, Cent. Dig. § 229; Dec. Dig. § 149.*]

4. BANKRUPTCY (§ 149*)—PARTNERSHIP—ADJUDICATION AGAINST PARTNER—ADMINISTRATION OF PARTNERSHIP PROPERTY.

Where, on an adjudication of bankruptcy against a partner, the solvent partner did not consent to administration of the partnership property in the bankruptcy proceeding, nor waive its right to itself administer such property, the jurisdiction of the bankruptcy court was not enlarged, so as to cover the property of the firm, by the act of the bankrupt in surrendering to his trustee property belonging to the firm.

[Ed. Note.—For other cases, see Bankruptcy, Cent. Dig. § 229; Dec. Dig. § 149.*]

Appeal from the District Court of the United States for the Northern District of Texas; Edward R. Meek, Judge.

Action by the Marnet Oil & Gas Company against William H. Staley and others. From a judgment dismissing the bill without prejudice to complainant's right to file its claim by intervention in bankruptcy proceedings pending against defendant Staley, plaintiff appeals. Reversed and remanded.

Wm. J. McKie, of Corsicana, Tex., and Eugene Mackey, of New York City, for appellant.

George C. Greer, Frances Marion Etheridge, Joseph Manson McCormick, and Henri L. Bromberg, all of Dallas, Tex., and Richard Mays, L. B. Cobb, and Robert E. Prince, all of Corsicana, Tex., for appellees.

Before PARDEE and WALKER, Circuit Judges, and CALL, District Judge.

WALKER, Circuit Judge. The averments of the bill, as it was amended, show the following among other facts: In or about the year 1898, the defendant Staley and one Barnsdall formed a partnership for the mining of oil and gas mining lands, thereafter actively conducting and carrying on such partnership business, acquiring oil and gas lands, leases, and leaseholds, their respective interests in the several properties acquired not always being equal, and mining, developing, and operating the same in the firm name of Staley & Barnsdall;

*For other cases see same topic & § NUMBER in Dec. & Am. Digs. 1907 to date, & Rep'r Indexes

‡ See note at end of case.

Staley all along having exclusive charge of and running and managing the partnership business, buying all material and incurring in the firm name the expenses of operating the business. While the management of that business continued so to be in the hands of Staley, the plaintiff, a corporation of the state of Delaware, having by the terms of its charter the power "of entering into partnership with persons, firms and other corporations for operating any of its oil and gas properties or pipe lines," acquired the interest of Barnsdall in the partnership property. After such acquisition by the plaintiff, Staley continued in the management of the business, accounted to the plaintiff for its share of the oil produced from the partnership property, and received from the plaintiff sums of money for use by him in the conduct of the partnership business, with the result that a large balance will be due to the plaintiff on a settlement of the partnership accounts. The bill alleges sundry acts of Staley in violation of the plaintiff's rights as partner, and seeks a dissolution and winding up of the partnership, the appointment of a receiver of the partnership property, and a decree ascertaining the balance due to the plaintiff on an accounting of the partnership business, and the declaration and enforcement of a lien for such balance on Staley's interest in the partnership property, and that such lien be declared superior to any rights acquired by the defendants Edens and the Corsicana Petroleum Company; each of them being shown by the averments of the bill to claim some interest in the partnership property. After the bill was filed, the defendant Staley was adjudged a bankrupt, and a trustee of his estate in bankruptcy was appointed, who took charge of some or all of the property of which Staley had had control as managing partner. By an amendment of the bill the trustee in bankruptcy was made a party defendant to it. Thereafter, on the motion of the defendants Corsicana Petroleum Company, J. N. Edens, and the trustee of Staley's bankrupt estate, to dismiss the bill, it was "dismissed without prejudice to complainant's right to file its claim by intervention or otherwise in the proceeding in bankruptcy, In re W. H. Staley, pending before the Honorable Eugene Marshall, one of the referees of this court, with costs to the defendant to be taxed." The plaintiff appealed from that decree, and seeks a reversal of it.

[1] It is not doubted that the averments of the bill as to the dealings between the plaintiff and Staley following the former's acquisition of an interest in the property which the latter theretofore had had charge of as the managing partner of a firm previously existing showed the existence of a partnership relation between them; each of them contributing property or the use of it to a joint enterprise, in the profits and losses of which each of them was to share, and each of them recognizing and treating the other as a partner. A partnership resulted from the carrying on of the business in such circumstances as clearly manifested an understanding between the parties concerned in it that there was to be a community of profits and losses among them, whether there was or was not an express agreement between them for the formation of a partnership. Sullivan v. Sullivan, 122 Wis. 326, 99 N. W. 1022; Paul v. Cullum, 132 U. S. 539, 10 Sup. Ct. 151, 33 L. Ed. 430;

Hatchett v. Blanton, 72 Ala. 423; Meaher v. Cox, Brainard & Co., 37 Ala. 201; Dwight v. Brewster, 1 Pick. (Mass.) 50, 11 Am. Dec. 133; 30 Cyc. 352. This conclusion does not require for its support a resort to any rule peculiarly applicable to mining partnerships, but certainly is not impaired by the circumstance that the joint venture which was engaged in was in fact one of that kind. Kahn v. Smelting Co., 102 U. S. 641, 26 L. Ed. 266; Bissell v. Foss, 114 U. S. 252, 5 Sup. Ct. 851, 29 L. Ed. 126; Loy v. Alston, 172 Fed. 90, 96 C. C. A. 578.

[2] It is not less free from doubt that the averments of the bill disclosed a case entitling the plaintiff to equitable relief, in that, without regard to other features of the state of facts disclosed, it was made to appear that the plaintiff was entitled to a dissolution of the partnership, because no fixed period for the duration of it had been agreed on, and also because of alleged misconduct of Staley which was seriously prejudicial to the business, and in that, by reason of the plaintiff's advancement of greatly more than its share of the money required for the operation of the business, it was entitled, after the payment of the firm debts, to an equitable lien on the firm assets for what was due to it from the firm, and also on Staley's interest in those assets for the amount of such overadvancement made by it; one of the objects of the bill being the enforcement of such asserted lien. Hoyt v. Sprague, 103 U. S. 613, 624, 26 L. Ed. 585; Donelson's Adm'r v. Posey, 13 Ala. 752; 30 Cyc. 700; Thornton on Oil & Gas Law (2d Ed.) § 323.

[3] As above indicated, it was after the jurisdiction of the District Court as a court of equity had been invoked by the filing of the bill in this case, and while this suit was pending, that Staley, the defendant partner, was adjudged bankrupt. There was no adjudication of bankruptcy against the partnership, or any member of it, other than Staley. The situation brought about by one member only of the partnership being adjudged bankrupt was one contemplated by subsection "h" of section 5 of the Bankruptcy Act, which is as follows:

> "In the event of one or more but not all of the members of a partnership being adjudged bankrupt, the partnership property shall not be administered in bankruptcy, unless by consent of the partner or partners not adjudged bankrupt; but such partner or partners not adjudged bankrupt shall settle the partnership business as expeditiously as its nature will permit, and account for the interest of the partner or partners adjudged bankrupt."

The plain language of this provision negatives the existence of a right of the court as a court of bankruptcy to draw to itself the administration of the partnership estate when only one of the partners has been adjudged bankrupt, except in the event of the partner or partners not adjudged bankrupt consenting to its doing so. The right in such a case of a solvent partner to have the partnership business administered elsewhere than in bankruptcy is absolute unless waived by him. Collier on Bankruptcy (8th Ed.) 137. The provision by no means excludes the power of the bankruptcy court over the interest in the partnership property of the bankrupt member of the firm, after that interest, if any, shall have been ascertained and set aside. In the instant case the solvent partner did not waive its right to keep the administration of the partnership property out of the bankruptcy proceeding. On the contrary, prior to the institution of that proceeding

against one partner, the solvent partner had filed its bill for a dissolution of the partnership and a final accounting and settlement of the partnership affairs, and after the partner, who was a defendant in that suit, was adjudged bankrupt, continued the prosecution of that suit, thus plainly manifesting the purpose to have the partnership property administered elsewhere than in the bankruptcy proceeding, and at the time of the dismissal of its bill was actively invoking the aid of the court as a court of equity for the accomplishment of this purpose. The absence of the consent which was requisite to the existence of a right to administer the partnership property in the bankruptcy proceeding could not well have been more clearly manifested.

[4] The jurisdiction of the court as a court of bankruptcy was not enlarged by the act of the bankrupt in surrendering to the trustee in bankruptcy partnership property, theretofore in the bankrupt's charge as managing partner, which, without the consent of his solvent partner, the plaintiff in this suit, was not subject to be administered in the bankruptcy proceeding. And the court as a court of equity could not properly refuse the exercise of its equitable powers when duly and properly invoked, and constrain the party who so invoked the exercise of that jurisdiction to forego any relief at the hands of the court, unless it was sought by an intervention in a bankruptcy proceeding in which the partnership property which was the subject of the relief prayed for was not subject to administration, except by such party's consent. The effect of the action of the court which is complained of was to deny the plaintiff the relief to which its bill showed that it was entitled and to force it to forego any judicial assertion of its rights in the premises, except by intervening in a proceeding in which those rights were not subject to adjudication except by its consent. The result of this action was improperly to deprive the plaintiff of the right to have the partnership property administered otherwise than in the bankruptcy proceeding.

The contention has been made in argument that the decree appealed from finds support in the ruling made in the case of United States Fidelity & Guaranty Co. v. Bray, 225 U. S. 205, 32 Sup. Ct. 620, 56 L. Ed. 1055. That case did not involve the question of the right secured to a solvent partner by the above-quoted provision of the statute. The matter dealt with in the part of the opinion in that case which is relied on was a suit against a trustee in bankruptcy, the purpose of which was to control the disposition of a fund in his possession, admittedly belonging to the bankrupt's estate, and unquestionably subject to administration in the bankruptcy proceeding, and to determine to what extent and in what order the several creditors should participate therein. Plainly, it does not follow, from the decision that that claim should have been asserted in the bankruptcy proceeding, that such a claim as that asserted by the plaintiff in this case, relating, as it did, to the administration of partnership property, which, without the plaintiff's consent, was beyond the reach of the bankruptcy proceeding, could properly be required to be asserted nowhere except in that proceeding. An effect of the statute was to forbid the court so to attempt to draw into the bankruptcy proceeding the administration

of partnership property not subject to administration in that proceeding, the consent requisite to that property becoming a subject of administration in that proceeding not having been given.

The decree appealed from is reversed, and the case is remanded for further proceedings not inconsistent with the conclusions above stated.

NOTE.

Misconduct of Partner as Cause for Dissolution of Firm.

I. In General.

(U. S.) Where a person has been induced to enter into a partnership through the deceit of his copartner, he may withdraw whenever the fraud practiced on him becomes known, as he is not required to continue in the firm until the partnership expires by limitation of time.—Rosenstein v. Burns (C. C.) 41 Fed. 841.

(U. S.) Though bad character, drunkenness, and dishonesty on the part of one partner may be good grounds for dissolving a partnership on the application of the other, this other not having known, at the time of forming the partnership, these characteristics of his copartner, yet when, before the partnership was formed, they were known by the partner not guilty of them to have existed, they do not authorize such partner himself to treat the partnership as ended, and to take to himself all the benefits of the joint labor and joint property.—Ambler v. Whipple, 87 U. S. (20 Wall.) 546, 22 L. Ed. 403.

(U. S.) A contract between the lessor and lessee of a theater, in effect, made them partners in the theater business; the lessee to have sole management thereof, and the lessor to have "no control, authority, or voice" therein. *Held*, that it was no breach of the contract, justifying a re-entry, that the lessee's employés did not, on one occasion, open the box office for an hour after the advertised time, or that they, on one occasion, without his knowledge, speculated in seats, by selling tickets outside the box office, accounting for them at the price fixed by the manager for that attraction, especially when such employés had been appointed on the recommendation of the lessor, and were also retained by him after his re-entry, with a full knowledge of the facts.—Leavitt v. Windsor Land & Investment Co., 54 Fed. 439, 4 C. C. A. 425, 12 U. S. App. 193.

(U. S.) A bill setting out an agreement between plaintiff and defendant, as the owners in common of a ranch, to improve the same in partnership, the plaintiff to advance the money needed, and the defendant to supervise the work, and which alleges that plaintiff has advanced thereunder over $60,000, none of which has been repaid, and that defendant's agent, employed in his stead to superintend the work, and acting as such agent, has excluded plaintiff from any voice in the management of the business, and threatens, and is proceeding, to make improvements against plaintiff's advice and protest, for which, under the agreement, plaintiff is bound to pay, states sufficient ground for the dissolution of the partnership.—Einstein v. Schnebly, 89 Fed. 540.

(Ala.) Where a partnership is formed for the purpose of buying and selling land, each partner to furnish an equal share of money, if one should refuse to make the necessary advances, it would be good cause for putting an end to the partnership.—Turnipseed v. Goodwin, 9 Ala. 372.

(Ala.) Where a person entering into a partnership for the erection and operation of a steam sawmill with another is deceived and misled by his representations as to his skill and capacity as a machinist and engineer, a court of equity may decree a dissolution of the partnership.—Fogg v. Johnston, 27 Ala. 432, 62 Am. Dec. 771.

(Ala.) Where one partner files a bill against his several partners for a settlement of the partnership accounts and his share of the profits, a fraud perpetrated by him on one of the defendants in a former partnership between them individually, by means of which he procured the funds contributed as his share of the capital of the new firm, is no ground for annulling or rescinding the contract of partnership.—Ingraham v. Foster, 31 Ala. 123.

(Ark.) Where by articles of partnership one partner agreed to furnish funds for keeping up the supplies "when in his power to do so," and the other partner agreed to sell goods "while he remained at home," slight negligence or accidental failures of either to keep his engagements was not cause for dissolution; but only unequivocal demonstrations of misconduct, where the injury would be imminent and irreparable, would constitute such cause.—Howell v. Harvey, 5 Ark. (5 Pike) 270, 39 Am. Dec. 376.

(Conn.) L., an original contractor for a building, agreed with A. to take him as a partner in the contract; A. agreeing to "stand with his share of losses as well as gains." When the building was nearly completed, A. was requested to contribute his share of the sum required to pay claims against the firm, but he declined to do so, whereupon L., having first notified A., and given him an opportunity to make good his agreement, rescinded the partnership agreement. *Held*, that such rescission, after due notice, terminated the partnership.—Lapenta v. Lettieri, 44 Atl. 730, 72 Conn. 377, 77 Am. St. Rep. 315.

(Ill.) A mere error of judgment, especially if involving no permanent mischief, is no ground for a decree dissolving a partnership.—Cash v. Earnshaw, 66 Ill. 402.

(Ky.) Where one of the parties to an agreement of partnership has been induced to enter into it by the fraudulent representations of the other, the partnership may be declared void.—Hynes v. Stewart, 49 Ky. (10 B. Mon.) 429.

(La.) A municipality, having voluntarily accepted a partnership with an individual in the profits to be derived from a market-house, was not entitled to any peculiar rights, but stood on the same footing as a natural person, and, on attempting an innovation to the detriment of the partnership affairs, the other partner was entitled to a division of the property.—City of New Orleans v. Guillotte's Heirs, 12 La. Ann. 818.

(La.) Where a person employed two others to do certain work, with the right to discharge either or both of them, and such employés were partners, on the discharge of one of them by the employer for cause, the other had a right to determine the partnership.—Leonard v. Sparks, 33 South. 594, 109 La. 543.

(Me.) In an action by the plaintiff to recover pay for services rendered to the defendants as copartners, the defendants claimed that the copartnership was dissolved by the giving of a "trust mortgage" by one partner without the knowledge or consent of the other, and that the former could not thereafter employ the plaintiff on the credit of the firm. *Held*, that the giving of the trust deed did not dissolve the partnership at once, since the trustees had not accepted the trust to make it effective, and the partner without notice would still retain his contract rights uninjured, and be entitled to recover his pay.—Smith v. Smith, 44 Atl. 905, 93 Me. 253.

(Mass.) The absconding of a partner does not, per se, dissolve the partnership.—Whitman v. Leonard, 20 Mass. (3 Pick.) 177; Arnold v. Brown, 41 Mass (24 Pick.) 89, 35 Am. Dec. 296.

(Mich.) Under a partnership for the purchase and running of a vessel, though the bill of sale of the vessel mentions one of the partners as "controlling," if he ejects the agent of the other partner from the vessel, and claims the exclusive use of it, he commits an act entitling the other partner to a dissolution and account.—Groth v. Payment, 79 Mich. 290, 44 N. W. 611.

(N. H.) If the written articles of a copartnership stipulate that there shall be no trade in spirituous liquors, and they are so changed as to allow such trade, it is a material alteration, which will warrant a partner in withdrawing from the firm.—Abbot v. Johnson, 32 N. H. 9.

(N. J.) Where a partner is excluded from the business of the firm by the illegal acts of his copartner, he is entitled to a decree of dissolution on the ground of such illegal exclusion from the business.—Hartman v. Woehr, 18 N. J. Eq. (3 C. E. Green) 383.

(N. J.) Where, upon a bill for dissolution, it appeared that the defendant was chargeable with misconduct in making a needless purchase of stock, by which the firm had been run heavily in debt, and in permitting a judgment to be recovered therefor without the knowledge of his partner, and also in colluding with others in a secret removal of assets of the firm for some purpose inconsistent with good faith toward the complainant, and that the complainant had been led thereby to procure the arrest of defendant on a charge of

larceny, *held* that these circumstances warranted a dissolution on the ground that mutual confidence had been destroyed.—Seighortner v. Weissenborn, 20 N. J. Eq. (5 C. E. Green) 172.

(N. Y.) Acts of plaintiff's intestate, as a member of the firm which preceded the present business, cannot be considered in ascertaining the alleged delinquency for which he was expelled from the latter.—Campbell v. Sherman, 55 Hun, 609, 8 N. Y. Supp. 630.

(N. Y.) Misconduct and mismanagement of a partner will not entitle the copartner to rescind the partnership agreement, and recover his contribution, where the partner was guilty of no fraud when the agreement was made.—Hollister v. Simonson, 55 N. Y. Supp. 372, 36 App. Div. 63, appeal dismissed, 63 N. E. 342, 170 N. E. 357.

(N. Y.) A partnership agreement between attorneys at law, contemplating that one of the parties should devote to the partnership substantially all his time and energy, so far as the partnership interests might be promoted thereby, may be terminated by the other party, where, upon the election of the former as a justice of the peace, he was so officially engaged nearly every day.—Stiles v. Bradley, 117 N. Y. Supp. 637, 133 App. Div. 508.

(N. Y.) A repudiation by a partner of his own obligations may be considered as a repudiation of the partnership.—Westwood v. Cole, 120 N. Y. Supp. 884, 66 Misc. Rep. 53.

(Tenn.) The failure of one of the partners to comply with the terms and conditions of the partnership contract will not annul the partnership, unless such condition is a condition precedent.—Murray v. Johnson, 38 Tenn. (1 Head) 353.

(Tex.) Plaintiff alleged that he and defendant agreed to operate a newspaper and job printing business, in which defendant was to furnish a press and plaintiff his skill and labor, the net proceeds to be equally divided between them, and that plaintiff established the paper, and after operating it for six months he was ousted by defendant, who took possession of the entire property, and notified the patrons that he had discharged plaintiff from his employment. *Held*, that such complaint stated a good cause of action for the wrongful exclusion of plaintiff from the partnership business.—Sewell v. Connor (Civ. App.) 23 S. W. 555.

(Wis.) Where by partnership agreement one of the partners is to operate a certain manufactory, putting into it his money and personal labor, and he refuses to pay in the amount of capital stipulated, or to manufacture the articles as agreed, so as to make the work profitable, or to keep an account of the receipts, and expenditures, to account at reasonable times to the other party, or to make payments to or for him out of the net proceeds as agreed, a dissolution of the partnership may be decreed.—Wood v. Beath, 23 Wis. 254.

II. Conversion or Misappropriation of Funds or Property.

(U. S.) Where one partner has contracted to sell the partnership property, standing in his name, and refuses to admit his partners' interest in the property or proceeds, equity has jurisdiction of a suit by one of the other partners for a dissolution and an accounting, and in such case, where fraud is charged against such defendant, the court will not permit him to retain control and the right to dispose of the property by giving a bond, but will enjoin his further action in respect thereto and take possession by its receiver until the rights of the parties are determined.—Gaddie v. Mann, 147 Fed. 960.

(Ala.) Where a bill in an action by a partner for a reference to state an account and for the appointment of a receiver alleged that the defendant partner was insolvent, and that he had collected money due the firm, which he had appropriated to his own use without making any entry on the partnership books and without acquainting complainant partner of the facts, it was sufficient, when supported by proof, to warrant a decree for dissolution and the appointment of a receiver.—Brooke v. Tucker, 43 South. 141.

(Cal.) That one partner fraudulently converts to his own use property supplied by another for the partnership use dissolves the partnership, or at least gives the injured party a legal right of action.—Crosby v. McDermitt, 7 Cal. 146.

(Ind.) Though a partnership agreement provides that, before the firm can be dissolved, notice must be given by the partner desiring dissolution, if an insolvent partner misappropriates firm money, and refuses to account therefor, the other partner may bring suit to dissolve the firm without giving notice.—Adams v. Shewalter, 139 Ind. 178, 38 N. E. 607.

(Ind.) Where a partner in possession of the entire assets of the firm refuses to account therefor to his copartners, but uses the assets to pay off a mortgage on real estate owned by himself and wife, and then conveys his interest to his wife, a court of equity may decree a dissolution and accounting at the suit of the other partners.—Hanna v. McLaughlin, 63 N. E. 475, 158 Ind. 292.

(Ky.) Where one partner got possession of the entire proceeds of the year's operations, without the consent of his copartner, there being nothing in the partnership agreement authorizing him so to do, and assumed the exclusive control of the whole business, it was *held* to be such a breach of faith as to authorize a decree for a dissolution of the partnership.—Kennedy v. Kennedy, 33 Ky. (3 Dana) 239.

(La.) The violation of an article stipulating a monthly settlement and division of profits justifies a dissolution.—Bruce v. Ross, 18 La. 341.

(Mass.) After a firm, though not actually dissolved, has ceased to do business, and by fraudulent devices has stripped itself of the great bulk of its assets, a defrauded partner, whatever his liability to firm creditors, is not as to members of the firm a partner.—Lovejoy v. Bailey, 101 N. E. 63, 214 Mass. 134.

(Neb.) A petition alleged that plaintiffs and defendant were partners; that defendant has possession and apparent title of a large amount of property belonging to the firm which he refuses to account for or divide in compliance with the partnership agreement, and threatens to sell the same and place the proceeds beyond the reach of plaintiff, and prayed for a dissolution and an accounting. *Held* to state a good cause of action.—Carroll v. Cunningham, 102 N. W. 608, 73 Neb. 295.

(N. Y.) It is sufficient ground for the dissolution of a copartnership that one of the partners collected and converted to his own use a large sum of money belonging to the firm.—Flammer v. Green, 47 N. Y. Super. Ct. (15 Jones & S.) 538.

(N. Y.) Where a complaint by a partner against his copartner and a third person charges that defendants, pursuant to a conspiracy, agreed for such third person to prefer a fraudulent claim against the firm; that, using the process of court, they obtained a judgment against the firm without plaintiff's knowledge, and by a sale of the firm assets deprived plaintiff of his interest in the property, and were in possession thereof—it states a cause of action for an accounting.—Green v. Tuchner, 84 N. Y. Supp. 345, 87 App. Div. 314.

(Pa.) The payment of individual debts by a partner with the firm's money does not entitle the other partner to a dissolution, where the capital of the partner so using the money was at all times unimpaired, and the transactions have been regularly entered.—Page v. Vankirk, 1 Brewst. 282.

(Tex.) A violation of the right of a partner to participate in the firm affairs and in the profits is sufficient to warrant a dissolution.—Holder v. Shelby, 118 S. W. 390.

(Vt.) A conveyance by one partner of partnership realty in payment of an individual debt is such a fraud on the firm, its assets only slightly exceeding its liabilities, as warrants a dissolution of the partnership.—Hubbard v. Moore, 67 Vt. 532, 32 Atl. 465.

(216 Fed. 929)

UNITED STATES TRUST CO. v. GORDON et al.
In re DOVEY COAL CO.

(Circuit Court of Appeals, Sixth Circuit. October 9, 1914.)

No. 2421.

BANKRUPTCY (§ 310*)—CORPORATION—PROOF OF MORTGAGE BONDS—RIGHTS OF MORTGAGE TRUSTEE.

A bankrupt corporation had issued bonds secured by a mortgage, which provided that in case of default for six months the mortgage trustee might on its own motion, or on request of bondholders, proceed by suit to enforce its provisions, or it might decline to do so, in which event only a bondholder might proceed in his own name. At the time of the bankruptcy there had been default for more than six months, but the trustee had instituted no suit, nor had there been any request therefor. Two men, who owned all of the bonds severally, proved their claims as secured creditors, and the same were allowed. Afterwards the mortgage trustee filed a claim for the entire mortgage debt, and asked that the property be sold by the trustee in bankruptcy, which was done on his own petition, without objection. *Held*, that the proceeding was not such an enforcement of security as was committed by the mortgage solely to the trustee, and that, the debts having been proved and allowed to the real owners, it was not error for the bankruptcy court to refuse to recognize any right in the mortgage trustee and to reject its claim.

[Ed. Note.—For other cases, see Bankruptcy, Cent. Dig. §§ 501-507; Dec. Dig. § 310.*]

Appeal from the District Court of the United States for the Western District of Kentucky; Walter Evans, Judge.

In the matter of the Dovey Coal Company, bankrupt; W. L. Gordon, Jr., trustee. The United States Trust Company, as trustee, appeals from an order rejecting its claim. Affirmed.

P. N. Booth, of Louisville, Ky., for appellant.

Before WARRINGTON and KNAPPEN, Circuit Judges, and HOLLISTER, District Judge.

KNAPPEN, Circuit Judge. The Dovey Coal Company, a corporation, on May 1, 1905, issued a series of negotiable bonds aggregating $50,000, securing the same by deed of trust in nature of first mortgage on all its property and franchises to the United States Trust Company, of Louisville, Ky., as trustee. On October 30, 1905, and November 29, 1905, respectively, the Coal Company gave the Trust Company further mortgages securing the same bond issue. On July 1, 1910, the Coal Company issued a further series of negotiable bonds amounting to $40,000, securing the same by a second mortgage trust deed upon its assets to the same trust company as trustee. Each mortgage contained sinking fund provisions. All the bonds of both series were held in severalty by two creditors, Lam and Eades (the bonds being in their sole and actual possession), except $5,500 of first mortgage bonds held by the Trust Company, in connection with $147.50 cash, under the sinking fund provision of the first mortgage. Each mortgage contained a clause providing for immediate maturity of the bonds in case of six months' default in making interest or sinking fund payments, or in the performance of other conditions, and for the effecting of such maturity through

*For other cases see same topic & § NUMBER in Dec. & Am. Digs. 1907 to date, & Rep'r Indexes

a written demand upon the trustee by the holders of 10 per cent. in amount of the bonds, and the trustee's notification to the Coal Company of such maturity. Subdivision 2 of the default article is printed in the margin.[1]

In case of "enforcement of the terms of this indenture," the proceeds of sale, as well as the sinking fund, were to be devoted, first, to the payment of costs; second, to the trustee's expenses, counsel fees, and compensation; and, third, to the equal pro rata benefit of bond and coupon holders.

The Coal Company having become bankrupt after default in payment of interest Lam and Eades, on November 25, 1911, made proof of their respective claims as bondholders under the deeds of trust, both claims being allowed on either November 25 or December 5, 1911. After this allowance, and on December 5, 1911, the Trust Company, as trustee, filed proof of claim on account of the entire of both bond issues, claiming lien for the full amount of both, also alleging default with respect to three semiannual sinking fund payments of $500 each under the first mortgage and of two such payments of the same amount under the second mortgage, the proof of claim stating that the Trust Company would "hereinafter plead further as to the enforcement of its rights as trustee under the aforesaid deeds of trust and mortgages and as to the sale of property hereinbefore referred to on which it holds liens as trustee."

On March 12, 1912, the petition of Lam and Eades for sale of the mortgaged property came on for hearing before the referee. The Trust Company, as trustee, objected (so far as here material) that the sale could be made only on the petition of the trustee in bankruptcy or after he had been given opportunity to make the same, and because of the power conferred on the mortgage trustee by the default provisions of both mortgages, the Trust Company expressing a desire to "bid on the property to be sold and to use the value of its lien in part payment of the purchase price." Without waiving these objections, the Trust Company asked that the trustee in bankruptcy be made to elect whether to sell the mortgaged property or the bankrupt's interest therein, and to show cause why he should not be required to file a petition for such sale. That officer thereupon elected to sell free of liens, and, by permission of the court, and without objection thereto, joined in and adopted the allegations of the petition of Lam and Eades, filing, however,

[1] "In case default shall be made by the Coal Company as set forth in the preceding section, and shall continue for the time therein prescribed, the trustee may, on its own motion or upon being requested by the holders of 10 per cent. of the then outstanding bonds and upon being indemnified by such holders against all costs, including expenses and counsel fees, shall proceed to enforce the provisions of this indenture by filing suit in its own name in some court having jurisdiction in the premises. The trustee may, however, upon such demand being so made upon it, decline to proceed; in which event, and in that event only, the holder or holders of any of the bonds secured hereby may proceed in his or their own name, and in any such proceeding taken by the trustee or by the holders of bonds a receiver may be at once appointed, and all tolls, rents, issues, incomes and profits shall pass to such receiver, as well those then accrued as those thereafter accruing, and such receiver shall take into his possession all of the real and personal property then under lien for the security of the bonds or covenants herein contained."

a new petition. The referee held that Lam and Eades had the right to claim the benefit of the mortgage security and that the mortgage default clause had no application to existing conditions, expunged the claims of the mortgage trustee as creditor (its claim having never been allowed), and granted the petition of the trustee in bankruptcy for sale of the mortgaged property. The court, on petition for review affirmed the referee's order, reserving to the Trust Company the right to present further claims for whatever was owing it when its proof of debt below was presented, for expenses and compensation in connection with and in the discharge of its duties as mortgage trustee.[2]

The Trust Company invokes the rule that individual bondholders secured by mortgage containing foreclosure-default provisions such as exist here cannot take proceedings to enforce the security except in case of the mortgage trustee's disqualification or refusal to act. This rule, as applied to the usual case of enforcement of security is well settled. 3 Cook on Corporations (6th Ed.) § 826; Electric Co. v. Electric Co. (C. C. A., 9th Cir.) 87 Fed. 590, 31 C. C. A. 118. The question is whether the rule is of controlling application under the facts presented here. It will be noted that, although default under both mortgages had existed for more than six months before bankruptcy occurred, the mortgage trustee has never attempted to foreclose, nor has it been asked to take such action, either before or after bankruptcy. Had foreclosure been pending when bankruptcy intervened, the foreclosure would not ordinarily be interfered with by the bankruptcy court. In re Rohrer (C. C. A., 6th Cir.) 177 Fed. 381, 383, 100 C. C. A. 613, and cases there cited. Had the bankruptcy court been applied to for leave to institute foreclosure proceedings, that court would have had power, in its discretion, to grant it. 1 Loveland on Bankruptcy (4th Ed.) § 57, p. 171. But such leave was not requested; the only enforcement of security actually asked for by the mortgage trustee was a sale by the trustee in bankruptcy. The substantial grievance of the mortgage trustee is that it was not allowed the status of creditor in recovery upon the bonds, and thus the receipt through the bankruptcy proceedings of the proceeds of the sale of the mortgaged property. Of course, the practical value to the mortgage trustee of the recognition asked lies in the opportunity thereby to recover commissions on the amounts received by it from the bankruptcy trustee and disbursed by the mortgage trustee to the bondholders. This is a valuable right, and should be protected under applicable situation.

But we think the court below reached the correct conclusion upon the case before it. The bondholders were clearly creditors of the bankrupt, and under section 57 of the Bankrupt Act (Act July 1, 1898, c. 541, 30 Stat. 560 [U. S. Comp. St. 1901, p. 3443]) had the right to prove their claims as such, unless the mortgage has given the trustee a superior right. The mere fact that the trustee holds the legal title to the security, does not necessarily make it, in equity, a creditor with respect to the debt itself. The mortgage trustee's proof of claim alleges that the consideration of the mortgage debt is "moneys loaned to

[2] This reservation is found in the court's opinion, which contains the only order on review printed in the record.

said Dovey Coal Company by the owners and holders of the bonds referred to in the mortgages or deeds of trust hereinafter mentioned or by their assignors," and the record contains the concession in argument below that the Trust Company "as trustee or otherwise has no pecuniary interest or ownership in said bonds or any of them." It should go without saying that the bondholders are alone interested in the sinking fund. When the Trust Company filed its claim as creditor the bondholders had already been awarded the status of creditors, and no review of this action appears to have been attempted. As said by Judge Evans, in deciding the case below, the trustee "assumed to act for the bondholders after they had acted for themselves, and after their claims had been allowed in an adequate manner."

The case is scarcely within the strict letter of the mortgage, for the trustee has neither been asked, nor has it sought, to "enforce the provisions" of the mortgage "by filing suit in its own name in some court having jurisdiction in the premises." In the absence of direct authority on the subject, we are not satisfied to hold that the petition to have the mortgaged property sold by the trustee in bankruptcy free of liens and the proceeds applied upon the mortgage debt is such an enforcement of security as the default provisions contemplate as inflexibly committed solely to the mortgage trustee. Nor is the case within the spirit of the provision invoked, because there is no longer occasion for the exercise of the authority in question, since bankruptcy has rendered receivership to prove claims thereunder unnecessary; all the bondholders (there being but two) are before the court, and there is thus no possible conflict of interest as between themselves or as between them and the mortgage trustee, except possibly as respects the fixing of fees for past services. Any controversy of this nature the bankruptcy court has ample power to adjust.

In these circumstances, the passing of the proceeds of sale from the trustee in bankruptcy to the two bondholders through the mortgage trustee, as a mere conduit, would be an unnecessary and expensive formality.

The order of the District Court is affirmed, with costs.

(217 Fed. 11)

IOWA LAND & TRUST CO. et al. v. UNITED STATES et al.

UNITED STATES v. HAWKINS et al.

(Circuit Court of Appeals, Eighth Circuit. July 29, 1914.)

Nos. 4001, 4077.

1. INDIANS (§ 13*)—LANDS—VALIDITY OF PATENTS—FRAUDULENT ENROLLMENT OF DECEASED PERSON.

The father of a child which had died in 1898, by false and perjured testimony that the child was a living freedman member of the Creek Tribe of Indians on April 1, 1899, procured his enrollment as such by the Commission under Act June 28, 1898, c. 517, 30 Stat. 495, Act March 1, 1901, c. 676, 31 Stat. 861, and the Supplemental Agreement with the Creek Nation of June 30, 1902, c. 1323, 32 Stat. 500, and the subsequent issuance in his name of patents to an allotment of land under said acts, which land the parents, as his heirs, sold and conveyed. *Held* that, there being no such person in existence on April 1, 1899, his enrollment and the patents issued to him were wholly void and conveyed no title, and no subsequent grantee could acquire any title or rights thereunder.

[Ed. Note.—For other cases, see Indians, Cent. Dig. § 30; Dec. Dig. § 13.*]

2. VENDOR AND PURCHASE (§ 220*)—BONA FIDE PURCHASERS—LIMITATION OF DOCTRINE.

The equitable doctrine of bona fide purchaser without notice does not apply, where there is a total absence of title in the vendor.

[Ed. Note.—For other cases, see Vendor and Purchaser, Cent. Dig. §§ 461–465, 720; Dec. Dig. § 220.*]

3. INDIANS (§ 18*)—LANDS—VALIDITY OF PATENT.

Act April 26, 1906, c. 1876, § 5, 34 Stat. 138, and Act June 25, 1910, c. 431, § 32, 36 Stat. 863, which provide for the contingency of the death of an Indian allottee before the deed becomes effective, and that in such case the land shall inure to and vest in his heirs, both assume the existence of a legal allottee, and neither has any application where there never was such an allottee in existence.

[Ed. Note.—For other cases, see Indians, Cent. Dig. § 49; Dec. Dig. § 18.*]

4. INDIANS (§ 13*)—PATENTS TO ALLOTMENT—SUIT FOR CANCELLATION—FINDING OF COMMISSION.

A finding by the Commission to the Five Civilized Tribes of Indians that a person was entitled to enrollment as a member of a tribe and to an allotment of land, in proceedings wholly ex parte, is not conclusive against the United States, when it sues to cancel the resulting patent on the ground that it was obtained by means of false and fraudulent proofs.

[Ed. Note.—For other cases, see Indians, Cent. Dig. § 30; Dec. Dig. § 13.*]

Appeal from the District Court of the United States for the Eastern District of Oklahoma; Ralph E. Campbell, Judge.

Suit in equity by the United States against James Hawkins, Ella Hawkins, the Boynton Land, Mining & Investment Company, the Iowa Land & Trust Company, E. S. Warner, L. C. Hivick, M. I. Seifried, W. H. Manes, and J. P. Hivick. From the decree there were cross-appeals by the United States and by the Iowa Land & Trust Company and E. S. Warner. Reversed on appeal of United States. Affirmed on appeal of other parties.

*For other cases see same topic & § NUMBER in Dec. & Am. Digs. 1907 to date, & Rep'r Indexes

In No. 4001:

Charles F. Runyan, of Muskogee, Okl., for appellants.

C. C. Herndon, Asst. U. S. Atty., of Muskogee, Okl. (John B. Meserve and D. H. Linebaugh, both of Muskogee, Okl., on the brief), for the United States.

In No. 4077:

C. C. Herndon, Asst. U. S. Atty., of Muskogee, Okl. (D. H. Linebaugh, of Muskogee, Okl., on the brief), for the United States.

N. A. Gibson, of Muskogee, Okl., for appellees Hivick and others.

Before HOOK and CARLAND, Circuit Judges, and REED, District Judge.

CARLAND, Circuit Judge. [1] Chester Hawkins was born January 1, 1897, and died May 27, 1898. He was the son of James and Ella Hawkins. On or about the 19th day of January, 1904, James Hawkins appeared before the Commission to the Five Civilized Tribes and filed therewith proof tending to show that the said Chester Hawkins was a freedman member of the Creek Nation or Tribe of Indians, and was in fact living and entitled to enrollment on the 1st day of April, 1899, as provided in the act of June 28, 1898 (30 Stat. 495), and the act of March 1, 1901 (31 Stat. 861), and the Supplemental Agreement of the Creek Nation of June 30, 1902 (32 Stat. 500). The Commission, accepting as true the proof offered by said James Hawkins, admitted to enrollment said Chester Hawkins as a freedman citizen of the Creek Nation, entitled to an allotment of land under the several acts of Congress above referred to. On or about June 6, 1904, said James Hawkins made application to the Commission to have allotted to Chester Hawkins the northwest quarter of section 14, township 12 north, range 13 east. On the same day certificates of allotment were issued to the said Chester Hawkins and delivered to James Hawkins, allotting forty (40) acres of said land as a homestead and 120 acres as surplus land. On August 20, 1904, a homestead deed or patent was issued to Chester Hawkins by P. Porter, Principal Chief of the Muskogee (Creek) Nation, conveying to said Chester Hawkins the southeast quarter of the northwest quarter of section 14, township 12 north, range 13 east. On the 30th day of August, 1904, an allotment deed was issued by the Muskogee or Creek Nation, signed by P. Porter, Principal Chief, as aforesaid, conveying to Chester Hawkins the west half of the northwest quarter and the northeast quarter of the northwest quarter, section 14, township 12 north, range 13, which deeds were approved by the honorable Secretary of the Interior October 26, 1904, and were filed for record November 4, 1904. James Hawkins and Ella Hawkins conveyed the land in question to the Iowa Land & Trust Company for the consideration of $300. On the 17th day of March, 1909, James Hawkins and Ella Hawkins conveyed the same property for the consideration of $1 to E. S. Warner, who was the president of the Iowa Land & Trust Company. June 3, 1910, the Iowa Land & Trust Company executed and delivered an oil and gas lease on said land to L. C. Hivick and M. I. Seifried.

The evidence submitted by James Hawkins, upon which Chester Hawkins was admitted to enrollment by the Commission to the Five Civilized Tribes, was false and perjured; Chester Hawkins having died as hereinbefore stated. The United States brought this action in the court below in its own behalf and in behalf of the Creek Tribe or Nation of Indians, for the purpose of having the patents issued to Chester Hawkins declared void and canceled. The trial court granted the relief prayed for except as to the lessees of the Iowa Land & Trust Company, holding that the patents were void as against the other defendants, and that the Iowa Land & Trust Company had actual notice that Chester Hawkins was not living on April 1, 1899. It decided that the lessees of the Iowa Land & Trust Company were innocent purchasers, so to speak. The United States has appealed from so much of the decree as was in favor of the lessees of the Iowa Land & Trust Company—No. 4077. The Iowa Land & Trust Company and E. S. Warner have appealed from the decree against them—No. 4001. All other defendants either filed a disclaimer or defaulted.

As we view the case, we do not think that it is one where the defense of innocent purchaser may be applied. Chester Hawkins, having died before April 1, 1899, must be considered as having had no existence, so far as being a citizen of the Creek Nation entitled to an allotment of land under any law of Congress. The patents issued by the Creek Nation ran to a person not in being, and therefore conveyed no title whatever. There being no ancestor entitled to an allotment of land, there was no land to which the heirs of Chester Hawkins were entitled. As we understand the Creek Agreement, in cases where the ancestor dies before allotment, but after enrollment, the lands were to be conveyed directly to the heirs; therefore there was no pretense in this case that the heirs were seeking an allotment as representatives of a deceased ancestor. There can be no question but that the patents were void. The only question is as to whether a case is presented where under any circumstance an innocent purchaser of the land can be protected. If no title passed from the Creek Nation, then the vendees of James and Ella Hawkins obtained no title, nor did the lessees of the Iowa Land & Trust Company.

[2] We do not see how there can be any escape from this conclusion. The equitable doctrine of a bona fide purchaser without notice does not apply where there is a total absence of title in the vendor. The good faith of a purchaser cannot create a title where none exists. Tiffany's Real Property, § 380 (Ed. 1903); Jones' Law of Real Property, § 223; Hunter v. Watson, 12 Cal. 363, 73 Am. Dec. 543. See, also, Boone v. Chiles, 10 Pet. 177, 9 L. Ed. 388; Vattier v. Hine, 7 Pet. 252, 8 L. Ed. 675; Sampeyreac v. United States, 7 Pet. 222, 8 L. Ed. 665; Lindblom v. Rocks, 146 Fed. 660, 77 C. C. A. 86; Texas Lumber Mfg. Co. v. Branch, 60 Fed. 201, 8 C. C. A. 562; Dodge v. Briggs (C. C.) 27 Fed. 160; Oakley v. Ballard, Fed. Cas. No. 10,393.

We are of the opinion that, as Chester Hawkins never had any existence so far as being entitled to an allotment of land is concerned, and having died before April 1, 1899, he was, so far as being an applicant for a patent to the land in controversy, a myth, and that the

language used by the Supreme Court in Moffatt v. United States, 112 U. S. 31, 5 Sup. Ct. 14, 28 L. Ed. 623, is pertinent. We quote from the opinion in the case as follows:

"The patents, being issued to fictitious parties, could not transfer the title, and no one could derive any right under a conveyance in the name of the supposed patentees. A patent to a fictitious person is, in legal effect, no more than a declaration that the government thereby conveys the property to no one. There is, in such case, no room for the application of the doctrine that a subsequent bona fide purchaser is protected. A subsequent purchaser is bound to know whether there was, in fact, a patentee, a person once in being, and not a mere myth, and he will always be presumed to take his conveyance upon the knowledge of the truth in this respect. To the application of this doctrine of a bona fide purchaser there must be a genuine instrument having a legal existence, as well as one appearing on its face to pass the title. It cannot arise on a forged instrument, or one executed to fictitious parties; that is, to no parties at all, however much deceived thereby the purchaser may be. Even in the case of negotiable instruments, where the doctrine is carried farthest for the protection of subsequent parties acquiring title to the paper, it cannot be invoked if the instrument be not genuine, or if it be executed without authority from its supposed maker. Floyd's Acceptances, 7 Wall. 666, 676 [19 L. Ed. 169]; March v. Fulton County, 10 Wall. 676, 683 [19 L. Ed. 1040]."

We think the present case comes clearly within the principles above announced. McLeod v. United States, 187 Fed. 261, 109 C. C. A. 207, and McClure v. United States, 187 Fed. 265, 111 C. C. A. 1, are cases where the Court of Appeals of the Ninth Circuit held for cancellation patents to land even where the land had been conveyed to bona fide purchasers.

It is claimed, however, that this court in the case of United States v. Jacobs, 195 Fed. 707, 115 C. C. A. 507, decided that the bona fide purchaser had a right to rely upon the finding of the Commission to the Five Civilized Tribes, that Pearlie Jacobs in that case was a living member of the tribe on April 1, 1899. We think the present case is clearly distinguishable from United States v. Jacobs, supra, in this respect: It appears from the opinion in that case that Pearlie Jacobs was a freedman member of the Creek Nation or Tribe of Indians and had been enrolled, but that she died before an allotment was made to her, and that under the law the heirs applied for the allotment and patents were issued to them. So far as a bona fide purchaser is concerned, the fact that the heirs of Pearlie Jacobs made an application for an allotment as representatives of a deceased ancestor, and that patents issued to them direct, presents a very different case from the one at bar. In the case cited the title to the land undoubtedly passed. The grantees were in being as held by this court. The bona fide purchaser dealing with the heirs, who had the apparent title on the face of the patent, would have a right to rely upon the judgment or finding of the Commission to the Five Civilized Tribes that the patentees were entitled to the land. In the case at bar there was no instrument which conveyed in any way the title to the land in question from the Cherokee Nation to James and Ella Hawkins. We therefore think that this is a case where the patents must be held to be void, even as against an innocent purchaser, if any such exists.

[3] It is claimed that section 5 of the Act of Congress of April

26, 1906 (34 Stat. 137), and section 32 of the Act of Congress of June 25, 1910 (36 Stat. 855), relieve the case of the difficulties which have been mentioned. These laws have no application where there is no allottee. The language used in section 5 assumes that there is in existence a legal allottee, and provides for the contingency of the death of the allottee before the patent becomes effective. This law provides that, if the death of the allottee occurs before the patent becomes effective, the land shall inure to and vest in his heirs. Section 32 is to the same effect. It assumes that deeds have been issued to a legal allottee, who has died before the approval of the deed. Neither section deals with the case where there never was an allottee in existence.

[4] It is urged, also, in the present case, that the United States cannot cancel the patents in question because the fraud alleged was not extrinsic to the matter tried at the hearing before the Commission. To support this position the following cases are cited: Hilton v. Guyot, 159 U. S. 113, 16 Sup. Ct. 139, 40 L. Ed. 95; United States v. Throckmorton, 98 U. S. 61, 65, 66, 25 L. Ed. 93; Vance v. Burbank, 101 U. S. 514, 519, 25 L. Ed. 929; Steel v. St. Louis Smelt. & Ref. Co., 106 U. S. 447, 453, 1 Sup. Ct. 389, 27 L. Ed. 226; Moffat v. United States, 112 U. S. 24, 32, 5 Sup. Ct. 10, 28 L. Ed. 623; United States v. Minor, 114 U. S. 233, 242, 5 Sup. Ct. 826, 29 L. Ed. 110. But the Supreme Court has often held that the rule above announced is not applicable to ex parte proceedings in the United States Land Office, and that the finding of the land officers in such proceedings, although not open to collateral attack, is not conclusive against the government, when it sues to cancel the resulting patent upon the ground that it was obtained by means of false and fraudulent proofs. United States v. Minor, 114 U. S. 233, 5 Sup. Ct. 826, 29 L. Ed. 110; McCaskill Co. v. United States, 216 U. S. 504, 30 Sup. Ct. 386, 54 L. Ed. 590; Washington Securities Co. v. United States, 234 U. S. 76, 34 Sup. Ct. 725, 58 L. Ed. 1220. In the case last cited it was said that:

> "No doubt those officers found from the proofs submitted to them that the lands were agricultural and not coal lands, for that was a prerequisite to issuing the patents; but the proceedings were not adversary in any true sense of the term. The applications and proofs of the entrymen were strictly ex parte. The government was not called upon to make any adverse showing, no issue was framed, no hearing was had, and no one represented the government, save in the sense that the land officers did so."

In the case at bar the hearing before the Commission to the Five Civilized Tribes was purely ex parte. The United States or the Creek Nation was not represented, and no issue was framed or tried.

From what has been said, it results that the decree below in favor of the lessees of the Iowa Land & Trust Company should be reversed, and the case remanded, with instructions to render a decree in favor of the United States against all defendants; and it is so ordered.

HOOK, Circuit Judge. I doubt that a deed or patent to a dead man is so utterly void that his heirs can convey no valid interest to

an innocent purchaser. The ancient ceremony at the transfer of land, which required a living grantee, does not prevail in this country, and the rule based on it should give way. So much for the case of the lessees. In other respects I concur in the foregoing opinion.

(217 Fed. 16)

In re BURR MFG. & SUPPLY CO.

In re PORTER.

(Circuit Court of Appeals, Second Circuit. August 31, 1914.)

Nos. 279, 280.

1. BANKRUPTCY (§ 36*) — PROCEDURE — POWER OF COURT TO VACATE ORDER AFTER TERM.

The general rule that a court has no power to set aside or modify its judgments or decrees after the term at which the same were entered does not apply to orders and decrees in a bankruptcy proceeding as to which there are no separate terms.

[Ed. Note.—For other cases, see Bankruptcy, Cent. Dig. § 36; Dec. Dig. § 36.*]

2. JUDICIAL SALES (§ 31*)—EFFECT OF CONFIRMATION.

While confirmation of a sale made under an order of court does not pass the legal title, it vests the full equitable title to the property in the purchaser.

[Ed. Note.—For other cases, see Judicial Sales, Cent. Dig. §§ 59–67; Dec. Dig. § 31.*]

3. JUDICIAL SALES (§ 35*)—VACATION—GROUNDS.

A judicial sale may be vacated for cause, even after confirmation; but public policy requires that there should be stability in such sales, and a sale should not be set aside, except for reasons for which equity should set aside a sale between individuals.

[Ed. Note.—For other cases, see Judicial Sales, Cent. Dig. §§ 72, 73; Dec. Dig. § 35.*]

4. JUDICIAL SALES (§ 42*)—PERSONS WHO MAY QUESTION VALIDITY.

One must be a party who is interested and injuriously affected by a judicial sale, to entitle him to apply to have it vacated.

[Ed. Note.—For other cases, see Judicial Sales, Cent. Dig. §§ 80, 81; Dec. Dig. § 42.*]

5. BANKRUPTCY (§ 311*)—SECURED DEBTS—WAIVER OF SECURITY.

A secured creditor of a bankrupt, who proves his debt as unsecured, waives his security.

[Ed. Note.—For other cases, see Bankruptcy, Cent. Dig. §§ 497–500; Dec. Dig. § 311.*]

6. JUDICIAL SALES (§ 31*)—IRREGULARITIES IN PROCEEDINGS—PERSONS WHO MAY QUESTION VALIDITY—LACHES.

Defects of form or irregularities in an order of sale or notice are cured by confirmation, and even in case of serious irregularities a party who, with knowledge of the same, fails to object before confirmation, loses his right by his laches, and cannot thereafter ask a vacation of the sale on that ground.

[Ed. Note.—For other cases, see Judicial Sales, Cent. Dig. §§ 59–67; Dec. Dig. § 31.*]

---

*For other cases see same topic & § NUMBER in Dec. & Am. Digs. 1907 to date, & Rep'r Indexes

7. JUDICIAL SALES (§ 39*)—VACATION—INADEQUACY OF PRICE.

Inadequacy of price alone is not sufficient ground for setting aside a sale after confirmation, unless the inadequacy is so great as to raise a presumption of fraud or to shock the conscience of the court.

[Ed. Note.—For other cases, see Judicial Sales, Cent. Dig. § 77; Dec Dig. § 39.*]

8. BANKRUPTCY (§ 269*)—SALE OF REALTY BY TRUSTEE—GROUNDS FOR VACATION.

The difference between $6,250, for which property was first sold by a trustee in bankruptcy, and $8,500, which it brought on a resale, *held* not to show such a gross inadequacy of price as to justify the vacation of the confirmation and the setting aside of the first sale.

[Ed. Note.—For other cases, see Bankruptcy, Cent. Dig. § 370; Dec. Dig. § 269.*]

Petitions to Revise Orders of the District Court of the United States for the Eastern District of New York.

Petitions to review and revise an order of the United States District Court for the Eastern District of New York setting aside a previous order confirming a sale, and also to review and revise an order confirming a resale held pursuant to the before mentioned order, and to vacate and set aside the order confirming the resale. Both petitions were consolidated and heard on a single record by order of this court.

For opinion below, see 209 Fed. 138.

The bankrupt corporation owned an equity in certain real estate situate at Nos. 96-98 Lexington avenue, borough of Brooklyn, city of New York. This real estate was incumbered by three mortgages as follows: A first mortgage of $4,250, held by the Bond & Mortgage Guaranty Company; a second mortgage of $2,000, held by Louisa P. Boaz; a third mortgage, held by William J. Myers, as trustee. The second mortgagee, whose mortgage was open, began foreclosure proceedings immediately after the petition in bankruptcy was filed. The trustee in bankruptcy made application to sell the property, and thereupon the referee, without notice to any mortgagee, made an order of sale free and clear of all liens. No mortgagee had notice of the sale and no mortgagee was present at the sale. There is no contention that due notice of sale was not sent to and received by the general creditors.

The property was put up for sale on August 5, 1913. The petitioner, Porter, bid $5,000, and his bid was the sole bid. The bid was then and there rejected by the trustee. The petitioner asserted that there was no authority to reject the bid, and demanded a deed, which was refused. The petitioner, Porter, thereupon moved the court, upon notice only to the trustee, for confirmation of the sale. The trustee and the attorney for the second mortgagee, who appeared voluntarily, protested against confirmation. The court adjourned the hearing, upon the motion to confirm, for two weeks. When the matter again came before the court, the petitioner, Porter, announced his readiness to pay $6,250, instead of $5,000, by buying up the second mortgage. The trustee objected to such private sale, and at the same time produced a Mr. Koehler in person, and stated he was willing to pay $7,500 for the property, and deposited with the court a certified check of 10 per cent. of this amount. The court, however, signed an order allowing the petitioner, Porter, to get the property for $6,250, the amount of the first and second mortgages.

The third mortgagee then came into court and asked for a resale and that the alleged confirmation of the sale to the petitioner, Porter, be vacated. The third mortgagee being a trustee for several beneficiaries, one of the beneficiaries also appeared and asked the same relief, and the trustee of the bankrupt likewise asked the same relief. The court set the alleged sale aside, vacated the alleged confirmation, and directed a new sale. At the resale one Herman Schomaker bid $8,500 for the property, and his bid was accepted, and

*For other cases see same topic & § NUMBER in Dec. & Am. Digs. 1907 to date, & Rep'r Indexes

the sale to him confirmed. The deed transferring the property to Schomaker was delivered to him in January, 1914.

The case now comes up on the petitions of Porter to review and revise the orders made.

Franklin Taylor, of New York City (Joseph J. Zeiger, of Brooklyn, N. Y., of counsel), for petitioner.

Henry A. Blumenthal, of New York City, for trustee.

Before COXE, WARD, and ROGERS, Circuit Judges.

ROGERS, Circuit Judge (after stating the facts as above). The question in this case is whether the action of the District Court vacating a sale of the property herein involved to the petitioner, Porter, and directing a new sale, shall stand. The sale made to Porter had been confirmed, only to be subsequently vacated. The purpose of a sale is that it shall be final, and the presumption is that a court, before confirming a sale made under its authority and in accordance with its directions, has observed due precaution to see that no wrong has been accomplished in and by the manner in which it was conducted. But it may sometimes happen that a court is imposed upon, or for some reason fails to perform its full duty in respect to such a sale, and when that happens a necessity may arise to vacate the sale, although it has been confirmed. We proceed to inquire whether the facts in this case justified the court below in its action, and whether Porter, the purchaser at the first sale, is or is not entitled to the benefit of his purchase.

[1] The confirmation order having been made at one term, and the order vacating it made at another term presided over by another judge, we are asked to hold that the court had no power to vacate its order, upon the theory that, after the expiration of the term in which an order, judgment, or decree is made, errors can be corrected only by an appellate court. In Bronsen v. Schulten, 104 U. S. 410, 415, 26 L. Ed. 797 (1881), Mr. Justice Miller, speaking for the court, said:

"It is a general rule of the law that all the judgments, decrees, or other orders of the courts, however conclusive in their character, are under the control of the court which pronounces them during the term at which they are rendered or entered of record, and they may then be set aside, vacated, modified, or annulled by that court. But it is a rule equally well established that after the term has ended all final judgments and decrees of the court pass beyond its control, unless steps be taken during that term, by motion or otherwise, to set aside, modify, or correct them; and if errors exist they can only be corrected by such proceeding by writ of error or appeal as may be allowed in a court which, by law, can review the decision."

It is, of course, true that as a general rule the power of the court to modify its orders expires with the term. But there are no terms in bankruptcy, and the principle which the learned counsel invokes that a court has no power to vacate its order other than at the term in which it was granted is inapplicable to the facts of this case. In Sandusky v. National Bank, 23 Wall. 289, 23 L. Ed. 155 (1874), Chief Justice Waite, speaking for the court, said:

"A proceeding in bankruptcy from the time of its commencement, by the filing of a petition to obtain the benefit of the act, until the final settlement of the estate of the bankrupt, is but one suit. The District Court, for all the purposes of its bankruptcy jurisdiction, is always open. It has no separate terms.

Its proceedings in any pending suit are, therefore, at all times open for reexamination upon application therefor in an appropriate form. Any order made in the progress of the cause may be subsequently set aside and vacated upon proper showing made, provided rights have not become vested under it which will be disturbed by its vacation."

[2] The confirmation of the sale did not pass the legal title to Porter, but it had the effect of vesting in him the full equitable title to the property. Before confirmation a sale is not in a technical and legal sense a sale. Until confirmation an accepted bidder is merely a preferred proposer. But a confirmation has the effect of completing the sale, and while it does not pass the legal title it vests the full equitable title to the property in the purchaser, even though the deed executed in pursuance thereof is irregular, and even if no deed whatever is made. Stang v. Redden (C. C.) 28 Fed. 11; Henry v. McKerlie, 78 Mo. 416; 17 Am. & Eng. Encyc. Law, p. 993.

[3] After a sale has been confirmed, it may be vacated for cause. But public policy requires that there should be stability in judicial sales. The Ruby (D. C.) 38 Fed. 622; Duncanson v. Manson, 3 App. D. C. 250; Quigley v. Breckenridge, 180 Ill. 627, 54 N. E. 580; Virginia F. & M. Ins. Co. v. Cottrell, 85 Va. 857, 9 S. E. 132, 17 Am. St. Rep. 108. They are not to be disturbed for slight causes. Pewabic Min. Co. v. Mason, 145 U. S. 349, 12 Sup. Ct. 887, 36 L. Ed. 732. And courts are not to be astute in finding out objection to them. Cunningham v. Schley, 6 Gill (Md.) 207; Gibbs v. Cunningham, 1 Md. Ch. 44.

"The order of confirmation gives to the sale the judicial sanction of the court, and when made it relates back to the time of the sale, and cures all defects and irregularities, except those founded on want of jurisdiction or fraud. As the contract is then complete, the sale will not be set aside, except for the same reasons for which equity would set aside a sale between individuals; but relief will be given when such reasons do exist, as, for example, where there has been fraud or mutual mistake." 24 Cyc. 36, 37.

We discover in the facts herein involved no grounds upon which a sale between individuals could be set aside. The reasons given for setting the sale aside were: That the original order of sale was not correct in form; that the proof of notice of sale was indefinite, and, while it made a prima facie compliance with the law, yet the notices did not seem to have been received; that as the parties had appeared they should have been served personally or by attorney rather than by mail; that the order of confirmation was not on notice to the parties whose rights were cut off. The District Judge declared he was unwilling "to find an estoppel where there are so many conflicting equities and where the purchaser was told at the sale that his bid would not be accepted."

The reasons assigned are wholly insufficient to justify the court in the action taken.

[4] It cannot be important that the mortgagees received no notice of the sale, for no one of the mortgagees is in a position where he can be heard to attack the sale. Any party interested may apply to have a judicial sale vacated, unless by his acts or his laches he has become estopped. But he must be a party who is interested and injuriously affected by the sale. Dufour v. Leftwich, 33 La. Ann. 1471; Gilmer v. Nicholson, 21 La. Ann. 589; Presstman v. Mason, 68 Md. 78, 11 Atl.

764; Klapneck v. Keltz, 50 W. Va. 331, 40 S. E. 570. The mortgagees are without interest, because the order confirming the sale was upon condition that the purchaser, Porter, should "accept title subject to such, if any, liens as may be on the property." Moreover the first mortgagee had agreed to renew his mortgage with the purchaser for the full amount at an advance in the rate of interest. The second mortgage was paid under the agreement the amount bid being sufficient to pay the first and second mortgages. And the third mortgage had been surrendered or waived. The fact that the third mortgagee did not surrender his mortgage until after the sale is not important. The material fact is that his interest as a mortgagee did not exist at the time when the sale was vacated.

[5] The third mortgage was discharged by the mortgagee proving his claim against the bankrupt's estate. A secured creditor does not waive his security by proving his debt in the bankruptcy proceedings, if he proves it as a secured debt. But if he proves his debt as unsecured he waives the security. See Black on Bankruptcy, § 562. The third mortgagee proved his claim as an unsecured claim for the full amount, and expressly relinquished his security to the trustee in bankruptcy, stating in his proof of claim that the debt had been secured by the mortgage, "all of which is surrendered herein to the trustee." This surrender was made on August 29, 1913. It also appears that he had received a dividend.

[6] If the original order of sale was "not correct in form," if the proof of notice of sale was "indefinite," such irregularities and defects were cured by the order confirming the sale. Nevada Nickel Syndicate v. National Nickel Co. (C. C.) 103 Fed. 391; Watson v. Tromble, 33 Neb. 450, 50 N. W. 331, 29 Am. St. Rep. 492; Neligh v. Keene, 16 Neb. 407, 20 N. W. 277; Cargile v. Ragan, 65 Ala. 287; Mechanics' Savings, etc., Ass'n v. O'Connor, 29 Ohio St. 651. Even in the case of serious irregularities, a party loses his right to object by failing to make timely protest. If he has knowledge of the defects prior to confirmation, and makes no protest, he loses his right by his laches, and cannot come in afterwards with a request to have the proceeding vacated. 2 Freeman on Executions, § 340.

[7] It is said that Porter's bid was grossly inadequate and such as to shock the conscience, and that on this ground alone the court was justified in setting aside the sale. The court in its order did not assign the inadequacy of the amount Porter agreed to pay as a reason for its action, but it seems to have implied it, for its order was made conditional, and was only to become effective upon the agreement of the objecting parties "to bid or produce a bid of not less than $7,500 (they have offered to bid $8,500) and consent to have the balance over liens and expenses go into the estate generally." The condition which the court attached to its order makes it plain that it could not have attached any serious importance to the reasons it mentioned in the earlier part of its opinion for vacating the order confirming the sale. The court seems to have been under the impression that the fact that a larger sum would be realized on a resale was sufficient justification for setting aside the first sale, when taken into consideration with the other circumstances.

The form of the order shows that the court did not regard the other circumstances alone as sufficient to set aside the sale.

[8] The rule is that inadequacy of price, standing alone, is not sufficient ground for setting aside a sale, unless the inadequacy is so great as in itself to raise a presumption of fraud or to shock the conscience of the court. The difference between $6,250, for which the property was first sold, and $7,500, for which the court was willing to sell on the resale, and the difference between the amount of the first sale and the amount of $8,500, realized at the resale, does not show that gross inadequacy which warrants a resale. The cases which illustrate what is meant by inadequacy which shocks the conscience are cases where the difference in value was very much greater than the difference existing in this case. In Lankford v. Jackson, 21 Ala. 650, property worth $1,000 was sold for $6. In Daly v. Ely, 51 N. J. Eq. 104, 26 Atl. 263, property worth $2,500 was sold for $50. In Hardin v. Smith, 49 Tex. 420, property worth from $2 to $5 an acre was sold for 28 cents per acre. And perhaps a sale for a half or a third of actual value may be within the rule. Sinnett v. Cralle, 4 W. Va. 600. But such a difference in value as is shown in the case at bar cannot be regarded as coming within the rule, even when taken in connection with the circumstances already noted. The circumstances relied upon raise no presumption of fraud or unfairness.

Before confirmation, if the inadequacy of the price be great, slight circumstances of unfairness on the part of the party benefited will be sufficient to prevent confirmation, and will justify the opening of the sale for further bids. In Ballentyne v. Smith, 205 U. S. 285, 27 Sup. Ct. 527, 51 L. Ed. 803 (1905), this course was allowed, the property being worth at least seven times more than the sum bid. But the case is different after the sale has been confirmed, and the court below seems to have lost sight of this distinction. After a sale has been confirmed, the court and the successful bidder are regarded as occupying the relation of vendor and purchaser in an executed sale, and nothing is sufficient to avoid it which would not set aside a sale of like character between private parties. In Morrison v. Burnette, 154 Fed. 617, 624, 83 C. C. A. 391, 398 (1907) the Circuit Court of Appeals in the Eighth Circuit declared that:

> "The rule is settled, and it seems to be universally approved, that after confirmation of a judicial sale neither inadequacy of price, nor offers of better prices, nor anything but fraud, accident, mistake, or some other cause for which equity would avoid a like sale between private parties, will warrant a court in avoiding the confirmation of the sale, or in opening the latter and receiving subsequent bids."

The court considered the rule so firmly established as to be no longer debatable, and in that view of the matter we concur. The cases are there collected, and need not be repeated here. And in view of the established principles there can be no doubt that the court below has committed a serious error in vacating the order confirming the sale made to the petitioner.

The order which set aside and avoided the sale to the petitioner, and all proceedings based thereon, and which directed a new sale of the property, and the order confirming the resale, are hereby reversed.

The case is remanded to the trial court, with directions to reinstate the order of sale to the petitioner and the order confirming the sale, and to take further proceedings not inconsistent with the views expressed in this opinion.

It is so ordered.

(217 Fed. 22)

POTLATCH LUMBER CO. v. HARKINS.

(Circuit Court of Appeals, Ninth Circuit. October 6, 1914. Rehearing Denied November 17, 1914.)

No. 2374.

1. MASTER AND SERVANT (§ 270*)—ACTION FOR INJURY TO SERVANT—EVIDENCE—PROOF OF USAGE.

In an action to recover for the injury or death of an employé, charged to have been due to the negligence of the employer in using a machine which was unsuitable for the purpose to which it was applied, it is competent for plaintiff to show that such use was not customary, where evidence is also introduced to show that the machine, when so used, was more dangerous to employés than those in common use.

[Ed. Note.—For other cases, see Master and Servant, Cent. Dig. §§ 913–927, 932; Dec. Dig. § 270.*]

2. EVIDENCE (§ 471*)—SUBJECTS OF EXPERT TESTIMONY—NEGLIGENCE.

In such suit an objection was properly sustained to questions on cross-examination calling for the opinion of the witness as to whether the manner in which the work was done was not the most "practicable," and as to whether the machine was not "reasonably safe."

[Ed. Note.—For other cases, see Evidence, Cent. Dig. §§ 2149–2185; Dec. Dig. § 471.*]

3. MASTER AND SERVANT (§ 293*)—ACTION FOR INJURY TO SERVANT—INSTRUCTIONS.

Instructions given in an action for injury to an employé considered, and, taken together, *held* not erroneous.

[Ed. Note.—For other cases, see Master and Servant, Cent. Dig. §§ 1148–1156, 1158–1160; Dec. Dig. § 293.*]

In Error to the District Court of the United States for the Northern Division of the District of Idaho; Frank S. Dietrich, Judge.

Action at law by Susan Harkins against the Potlatch Lumber Company. Judgment for plaintiff, and defendant brings error. Affirmed.

Edward J. Cannon, George M. Ferris, and Charles E. Swan, all of Spokane, Wash., Walter H. Linforth, of San Francisco, Cal., and Black & Wernette, of Cœur d'Alene, Idaho, for plaintiff in error.

Robert H. Elder and Ed. S. Elder, both of Cœur d'Alene, Idaho, for defendant in error.

Before GILBERT and ROSS, Circuit Judges, and WOLVERTON, District Judge.

GILBERT, Circuit Judge. The defendant in error recovered a judgment against the plaintiff in error for damages on account of the death of her husband, who was killed while employed by the plaintiff in error in skidding logs. The crew of which the deceased was a

*For other cases see same topic & § NUMBER in Dec. & Am. Digs. 1907 to date, & Rep'r Indexes

member was engaged in skidding logs with a Marion steam loader. The deceased, with two others, had dragged the cable with which the logs were skidded out about 400 feet, to a point where they attached the cable to a log. The men, under the direction of the foremen, stationed themselves at intervals alongside and near the route the log was to travel. This was done for the purpose of signaling to the engineer. The timber was on a hillside, with a grade of about 10 per cent. As the log was being hauled in, it started to run, and in its course it struck and upset a tree, which fell upon the deceased. Negligence is alleged, in that the Marion steam loader was not suitable or adapted to be used as a skidding machine, and was not equipped with the proper appliances commonly used on skidding machines, and was a dangerous, unsafe machine for performing the work of skidding logs, in that it was not provided with a whistle cord or any device for the purpose of giving signals, and was not provided with a haul-back line.

Error is assigned to the denial of the motion of the plaintiff in error for an instructed verdict in its favor, on the ground that there was no proof that the death of the deceased was caused by the negligence of the plaintiff in error, that the Marion steam loader was a reasonably safe machine, such as was in general use throughout the country, and that the deceased assumed all risks and dangers incident to the operation thereof. It is now argued that the evidence shows conclusively that the machine so used and the methods adopted at the time of the accident were the same as those adopted and used under similar circumstances and conditions all over the country, and that common usage is the supreme test of due care in the selection of appliances and the adoption of methods for conducting one's business. But this argument ignores testimony which tended to prove that, while the machine was in general use for loading logs on cars, it was not used for skidding purposes, and that increased hazard attended its use for that purpose. We are not convinced, therefore, that the court below erred in denying the motion, there being testimony to go to the jury tending to show the negligence of the plaintiff in error; testimony to the effect that the Marion steam loader was not commonly or generally used for skidding purposes; that it was a loading machine, and intended to be used only in loading on a car logs lying within a radius of 75 feet therefrom, and by means of a short cable. There was testimony of men of experience in logging that they had never seen the machine used for skidding purposes; that when so used there was no way of giving signals, except by shouting or waving the hand; that a machine used for skidding is equipped with a whistle cord for signaling purposes and a haul-back line; that such a machine has two drums, one for the cable which draws the log, the other for the haul-back line; and that the haul-back line is used for two purposes, one to carry the cable out into the timber, the other to hold the log in its course as it is being drawn by the cable. There was evidence that, if a haul-back line had been used in drawing the log which occasioned the death of the deceased, the log would have been held to its course and the accident would not have occurred.

[1] It is true that employers are not insurers, and that the party charging negligence does not prove it merely by showing that the machine is not in common use, for it may be that the machine used is safer than those which are in common use; but it is competent to show that the machine is unusual, and at the same time more dangerous than those in common use. Although there is conflict in the decisions, the better doctrine is well stated by the Circuit Court of Appeals for the Third Circuit in American Locomotive Co. v. White, 205 Fed. 260, 123 C. C. A. 464, as follows:

"The part that usage should play in controversies like the case before us has been much debated, and the decisions thereon have by no means been uniform. Confining ourselves for the present to the point now in issue, we state as our opinion that a servant may be permitted to prove the common usage of the business, when he charges the master with negligence in doing some act that departs from the usage; but the proof should be accompanied by evidence that the departure complained of has increased the danger. The increased danger may appear from the circumstances of the act in controversy, or (in a proper case) it may be shown by the direct testimony of witnesses."

See, also, Chicago & Great Western Ry. Co. v. Egan, 159 Fed. 40, 86 C. C. A. 230; McGeehan v. Hughes, 217 Pa. 121, 66 Atl. 238; Giraudi v. Electric Imp. Co., 107 Cal. 120, 40 Pac. 108, 28 L. R. A. 596, 48 Am. St. Rep. 114.

As to assumption of risk, it does not appear from the evidence that the deceased so appreciated the risk of his employment that the case should have been taken from the jury. The deceased had been working as a carpenter about the logging camp, and about two weeks before the accident he had been assigned to work at skidding logs with the Marion steam loader. Prior to that time, he had done no work with that kind of machine. The court, under proper instructions, submitted to the jury the question whether he assumed the risk.

[2] It is assigned as error that the court sustained the objection to the question asked the witness Younkin on cross-examination:

"As a matter of fact, they were doing that work there that morning in the most practicable and customary and usual manner under the circumstances. Isn't that true?"

The objection was sustained on the ground that the question was leading, and the court said that he would not permit either side to ask leading questions of the witness, inasmuch as he was then the foreman in the employment of the plaintiff in error and was the son-in-law of the defendant in error. We need not discuss the ground on which the ruling was made. We think there was no error, for the reason that the question called for the opinion of the witness as to whether or not the method of doing the work was the most "practicable." In 17 Cyc. 56, it is said:

"The issue of negligence can in most cases well be determined by the judgment of a jury, and the inference, conclusion, or judgment of witnesses is rejected. This rule has been applied, for example, * * * as to conduct—as whether it was cautious, dangerous, in the line of duty, necessary, negligent, proper, prudent, reasonable, professionally skillful, safe, usual, or unusual, and whether such conduct constituted good management."

Decisions in point are Atchison, T. & S. F. R. Co. v. Myers, 63 Fed. 793, 11 C. C. A. 439; Hunt v. Kile, 98 Fed. 49, 38 C. C. A. 641; Seese v. Northern Pacific R. Co. (C. C.) 39 Fed. 487; Inland & Seaboard Coasting Co. v. Tolson, 139 U. S. 551, 11 Sup. Ct. 653, 35 L. Ed. 270; Henion v. New York, N. H. & H. R. Co., 79 Fed. 903, 25 C. C. A. 223.

The foregoing considerations and authorities are applicable, also, to the contention that the court below erred in sustaining objections to questions propounded to witnesses as to whether or not the machine known as the Marion steam loader was a reasonably safe machine for the purpose of skidding logs within a radius of 500 feet.

[3] At the close of the instructions to the jury, counsel for plaintiff in error excepted to that portion thereof "which stated that the question for the jury to decide was whether the use of the Marion steam loader as it was being used at the time of this accident was more hazardous than if used with a haul-back." The court expressed his understanding that the charge had not been so given, and in fact it had not. The court said:

"To explain: Suppose the defendant had employed some other method by which certainly this accident could not have happened, and yet that method had been attended with danger of other accidents; that is, accidents of different kinds. As an illustration, if horses had been employed for hauling in these logs, this particular accident, of course, would not have occurred. It could not have occurred in just this way; but the question still remains whether this method is more hazardous, and unreasonably hazardous—more hazardous than the method of skidding the logs by the use of horses. So, referring to the matter of using a signal device and haul-back line, possibly this particular accident might have been avoided. But you would not be justified in concluding that this is an improper method, or a negligent method, simply or merely from the fact that you may conclude that this accident could have been avoided. The question still remains for you to answer, namely, whether this method was more hazardous than the other referred to, namely, the haul-back."

We find no error in the instructions so given, especially when it is considered in the light of the other instructions, which covered all questions involved in the case. It was necessary for the court to submit to the jury the question whether the machine in use was unusual, and whether it was more hazardous than the machine equipped with a haul-back line. We find no error.

The judgment is affirmed.

(217 Fed. 25)

NORFOLK SAND & GRAVEL CORPORATION v. OHIO LOCOMOTIVE CRANE CO.

(Circuit Court of Appeals, Fourth Circuit. September 8, 1914.)

No. 1248.

1. EVIDENCE (§ 441*)—EXTRINSIC EVIDENCE OF CONTRACTS—OFFER AND ACCEPTANCE.

Where a proposal to purchase an electric crane provided that the terms were 50 per cent. cash 30 days, balance in four notes of equal amount, payable 3, 6, 9, and 12 months, at 6 per cent., and that all communications between the parties, whether verbal or written, with reference to

*For other cases see same topic & § NUMBER in Dec. & Am. Digs. 1907 to date, & Rep'r Indexes

the subject of the contract, were superseded by the proposal and its acceptance by the purchaser, followed by its approval by an officer of the seller, should constitute a binding contract, and no modification should be binding on either party, unless it should be in writing, signed and accepted in the same manner as the original contract, a letter written by the seller's Southern representative, confirming an agreement as a part of the proposal that the seller should take an electric machine of the buyer and allow $2,300 on the price of the new one, not accepted or signed by any of the seller's officers, and not shown to have been submitted to the seller for acceptance, was ineffective to supersede the terms specified in the accepted proposal.

[Ed. Note.—For other cases, see Evidence, Cent. Dig. §§ 1719, 1723–1763, 1765–1845, 2030–2047; Dec. Dig. § 441.*]

2 PRINCIPAL AND AGENT (§ 173*)—ACTS OF AGENT—RATIFICATION—EVIDENCE.

In an action for the balance of the price of a crane, evidence *held* insufficient to show a ratification by the seller of an agreement of its agent to accept an old crane owned by the buyer as part payment.

[Ed. Note.—For other cases, see Principal and Agent, Cent. Dig. §§ 659–661; Dec. Dig. § 173.*]

3. SALES (§ 418*)—BREACH OF CONTRACT—DAMAGES.

For the breach of a seller's contract the buyer may recover such damages as are the natural, proximate, and certain consequences thereof, but cannot recover those which are remote, speculative, and contingent.

[Ed. Note.—For other cases, see Sales, Cent. Dig. §§ 1174–1201; Dec. Dig. § 418.*]

4. SALES (§ 420*)—BREACH OF CONTRACT—ELEMENTS OF DAMAGES.

Where it is doubtful whether items of damage claimed by a buyer from the seller's breach of contract are the natural, proximate, and certain consequences of the breach, or are remote, speculative, and contingent, the question must be determined as one of fact.

[Ed. Note.—For other cases, see Sales, Cent. Dig. § 1202; Dec. Dig. § 420.*]

5. SALES (§ 418*)—BREACH OF CONTRACT—DAMAGES—LOSS OF PROFITS.

In an action for the price of a locomotive crane, the buyer was not entitled to recover on a counterclaim the estimated extra cost of unloading gravel by reason of the failure of the crane to work properly, or the expense of demurrage due to the same cause.

[Ed. Note.—For other cases, see Sales, Cent. Dig. §§ 1174–1201; Dec. Dig. § 418.*]

In Error to the District Court of the United States for the Eastern District of Virginia, at Norfolk; Edmund Waddill, Jr., Judge.

Action by the Ohio Locomotive Crane Company against the Norfolk Sand & Gravel Corporation. Judgment for plaintiff for less than the relief demanded. Defendant brings error, and plaintiff assigns cross-error. Affirmed.

Albert L. Roper and Ralph H. Riddleberger, both of Norfolk, Va. (Riddleberger & Roper, of Norfolk, Va., on the brief), for plaintiff in error.

William H. White, Jr., and W. H. T. Loyall, both of Norfolk, Va. (Loyall, Taylor & White, of Norfolk, Va., on the brief), for defendant in error.

Before PRITCHARD and WOODS, Circuit Judges.

*For other cases see same topic & § NUMBER in Dec. & Am. Digs. 1907 to date, & Rep'r Indexes

WOODS, Circuit Judge. This action for $4,800, the alleged contract price of a hoisting crane and a cab, was tried under consent by the court without a jury, and resulted in a judgment in favor of the plaintiff for the amount claimed, less $709.48 allowed to the defendant on its claim of damages for breach of the contract as to the motive power. The assignments of error bring up the defenses which were rejected by the District Court. In passing on these the principle must be applied that all findings of fact by the District Judge having reasonable support in the evidence must be accepted as true.

The defendant's first claim is a credit of $2,300, which it is alleged the plaintiff contracted to allow for an old crane which the new one was to displace. G. W. Butt was the agent at Norfolk of the Ohio Locomotive Crane Company, through whom the negotiations for the sale of the crane began. On April 11, 1912, the Ohio Company signed a paper partly printed and partly written called "Proposal No. 2328," signed in its name, "per Chas. F. Michael, Sec'y," indorsed or "accepted" by the Norfolk Company April 15, 1912, "per Geo. W. Roper, V. P.," and "approved" by the Ohio Company, "per Chas. F. Michael, Sec'y," April 17, 1912. The contract thus made contained these stipulations:

"The terms of payment are 50 per cent. cash 30 days from date of invoice, balance in 4 notes of equal amount, payable 3, 6, 9, and 12 months from date of invoice, said notes to bear 6 per cent. interest."

"All previous communications between the parties hereto, whether verbal or written, with reference to the subject-matter herein dealt with, shall be superseded by this proposal, and its acceptance by the purchaser (or by a duly authorized agent of the purchaser), followed by its approval by an officer of the company, whose signature it must bear shall make it a binding contract; however the proposal, unless accepted by the purchaser within thirty days from its date, may, at the option of the company and without notice, be declared void and withdrawn."

"No modification of the contract shall be binding upon either party, unless such modification shall be in writing, signed and accepted in the same manner as the original contract."

In a letter dated April 13, 1912, addressed to the Norfolk Company and signed in the name of the Ohio Company, "by G. W. Butt, So. Representative," is found this stipulation:

"Confirming agreement and making part of proposal No. 2328, we will take the electric machine completed that you are now using as part payment on the locomotive crane we are to furnish; the allowance price being $2,300 as it now stands."

[1] The finding of the District Judge that this paper was not sent to the Ohio Company with the proposal and was not approved by an officer of the company is well supported by the evidence. The defendant was under the duty to ascertain the extent of Butt's authority. So far from the conduct of the plaintiff leading the defendant to suppose that Butt had authority to make the terms of sale, it very explicitly negatived such authority. The requirement that the contract be in writing and be sent to the Ohio Company for the approval of an officer plainly notified defendant that Butt's representation extended no further than taking and submitting to his principal a written offer. The letter relied on by defendant as part of the offer was not only a separate document,

but it purported to supersede the provision of the formal instrument that 50 per cent. cash should be paid in 30 days by the totally different provision that the plaintiff should take the old machine at a valuation of $2,300. The defendant, having been thus put on notice not to rely on Butt's promise, must take the consequences of his failure to send the letter to the plaintiff along with the formal contract for approval of its terms. The plaintiff having submitted to the defendant a written offer of sale clear in all its terms, and the defendant having accepted it in writing, no unauthorized promise of Butt can affect the right of the plaintiff to enforce the contract. If there be loss, the defendant must bear it, since it was its own fault that it was deceived by Butt's letter. National Safe Deposit Co. v. Hibbs, 229 U. S. 391, 33 Sup. Ct. 818, 57 L. Ed. 1241.

[2] 2. The defendant next contends that the evidence admits of no other reasonable inference than that the plaintiff by its conduct ratified Butt's agreement to accept the old machine as part payment of the purchase money. On July 10, 1912, after the crane had been set up, the plaintiff wrote, calling attention to the payments provided for in the contract. In reply Mr. Roper, vice president of the defendant company, wrote a letter mentioning the failure of the machine to come up to specifications, and saying:

"I do not quite understand the meaning of the third paragraph of your letter, on second page. In accordance with our contract, you were to allow us $2,300, which practically represented the cash payment for our old crane. This matter was taken up by us with your representative and made a portion of an agreement or proposal numbered 2328."

To this the plaintiff answered as follows:

"We are in receipt of your letter of the 15th inst., contents of which have been very carefully noted, and, as we thought these matters could be best explained to you verbally, we have arranged to have our Mr. Rogers call upon you, having left here last evening, feeling that he will be able to satisfy you on the several points you have raised. Therefore we will await Mr. Rogers' report."

Rogers, being delayed by other work, did not get to Norfolk until September. It appears from the correspondence that all matters of difference were discussed by him with defendants and Butt, but it does not appear that he made any concession as to the terms of payment.

The following extract from a letter of the vice president of the Norfolk Company, dated November 18th, shows clearly that he regarded the difference as to the terms and manner of payment in abeyance pending the efforts of the Ohio Company to make the machine work satisfactorily:

"Mr. Herndon spoke to me with respect to settlement for the machine, and I told him that, as soon as this motor could be changed and the machine put in shape as contemplated, we would be more than glad to take up with you question of settlement. I told him that the delay was caused by your failure to send machine properly equipped, and that this delay on your part caused us to be involved in a lawsuit, which will result in a great deal of expense. I suggested to Mr. Herndon that as soon as the machine was altered in accordance with his views, with the motor in the new position, it would be better for some member of your firm to take the matter of settlement up with

us in person. I believe you will find this the best way, especially in view of the seeming misunderstanding on your part with respect to the old machine."

It is true that ratification may be implied from silence or failure to repudiate after knowledge of the unauthorized act of an agent. Feild v. Farrington, 77 U. S. (10 Wall.) 141, 19 L. Ed. 923; Insurance Co. v. McCain, 96 U. S. 84, 24 L. Ed. 653. But whether silence or failure to repudiate amounts to ratification is a question of fact depending on circumstances. Supervisors v. Schenck, 72 U. S. (5 Wall.) 772, 18 L. Ed. 556; Hansen v. Boyd, 161 U. S. 397, 16 Sup. Ct. 571, 40 L. Ed. 746. The entire correspondence, and especially the defendant's letter, tends strongly to support the conclusion of the District Judge that the difference as to the manner and terms of payment was understood by both parties as remaining open until the machine was made to work satisfactorily.

3. The question of damages is not free from difficulty. The District Judge filed two separate papers as his findings of fact, but as both were filed before the judgment was entered, and are referred to as the basis of the judgment, they must be read together as one paper. In the first of these papers items to the amount of $709.48 are allowed to the defendant as follows:

Material, and other items necessary to alteration of machine (not disputed)	$394 48
Loss while machine could not be used at all during period in which alterations were being made, 21 days at $15 a day	315 00

The following items were disallowed:

Higher cost of operation of machine that was inadequate and not in accordance with contract:	
Extra cost of unloading 15,971 cu. yds. of gravel @ .0389¢	$621 27
Extra cost of unloading 32,907 cu. yds. of sand @ .02¢	658 14
Amount paid Southern Transportation Co. demurrage for overtime on gravel barges which could not be discharged in time allowed on account of slowness and inadequacy of hoist (vouchers 1083, 1326 and 1495)	202 50

In the second paper filed, referring to these disallowed items, among other things, the court found "that the defendant proved certain damages in offset as set forth in statements Nos. 1, 2, 3, and 4, to be read as part of this finding," etc., and then repeats his disallowance of the items. The argument in favor of allowing the defendant these items may be thus summarized: The evidence shows beyond dispute that the extra cost of handling the gravel and sand was incurred, and that the demurrage was paid, because of the failure of the machine to do the full work contemplated by the contract, and the District Judge by the special finding above mentioned has so held. From this the inference is drawn that the District Court could not have rejected the items, except on the theory that the damages were too remote, and that in this the court committed error of law.

[3, 4] The argument is, we think, unsound. The courts, it is true, hold as a principle of law that damages which were in the contemplation of the parties, and actually resulted, as the natural, proximate, and certain consequence of a breach of the contract, are recoverable, and

that remote, speculative, or contingent damages are not. It is also true that there are many claims for damages falling so clearly and distinctly on one or the other side of the line that the courts fix their status as a matter of law. But the rule is well established that in the intermediate region of doubt the question whether the damages fall on one or the other side is one of fact. United States v. Morgan, 52 U. S. (11 How.) 154, 13 L. Ed. 643; Benjamin v. Hillard, 64 U. S. (23 How.) 149, 16 L. Ed. 518; Hutchins v. Munn, 209 U. S. 246, 28 Sup. Ct. 504, 52 L. Ed. 776; Herencia v. Guzman, 219 U. S. 44, 31 Sup. Ct. 135, 55 L. Ed. 81. Numerous authorities on these familiar rules are collated in 53 L. R. A. 33, note.

[5] The damages disallowed in this case are in this region of doubt. There was no definite evidence as to the profits or losses of the business, and the charge for extra cost of unloading rested on estimate and not certain data. There was no evidence showing that the plaintiff had notice that the slow work of the machine due to inadequate power would result in the expense of demurrage. In addition to this there was evidence tending to show that the defendant might have minimized the damage by using the old machine at an expense of about $300 until the new could be made satisfactory, and also that the failure of the machine to give satisfaction was due to the lack of skill in operation, rather than lack of adequate power in the motor furnished by the plaintiff. No doubt the District Judge took all these matters into consideration in holding that, while proof had been made that the defendant suffered the damages mentioned in the disallowed items, yet those allowed represented in amount all that could be reasonably charged to the plaintiff as the proximate result of its failure to furnish an adequate motor. Enough has been said to show that this conclusion is not without support in the evidence. This being so, the findings are conclusive.

Looking at the entire record, we think all the special findings of fact made by the court had reasonable support in the evidence, and the judgment must therefore be affirmed.

Affirmed.

(217 Fed. 30)

NORTHERN COMMERCIAL CO. v. UNITED STATES.

(Circuit Court of Appeals, Ninth Circuit. October 6, 1914.)

No. 2294.

WHARVES (§ 3*)—LICENSE TAXES—"PUBLIC WHARF."

Where plaintiff, a transportation corporation, operated a wharf in connection with its business as common carrier, in which it carried goods for all shippers and stored the goods on its wharf in Alaska, such wharf was a public one, though it did not make a separate charge for wharfage apart from the freight charge for transporting the goods, within Code Cr. Proc. Alaska, § 460, as amended by Pol. Code Alaska, § 29, imposing a license tax on persons maintaining public docks, wharves, and warehouses in Alaska.

[Ed. Note.—For other cases, see Wharves, Dec. Dig. § 3.*

For other definitions, see Words and Phrases, First and Second Series, Public Wharf.]

*For other cases see same topic & § NUMBER in Dec. & Am. Digs. 1907 to date, & Rep'r Indexes

In Error to and on Appeal from the District Court of the United States for the Fourth Division of the Territory of Alaska; Edward E. Cushaman and Peter D. Overfield, Judges.

Submission of controversy between the United States of America and the Northern Commercial Company. From a judgment in favor of the United States, the Commercial Company brings error and appeals. Affirmed.

See, also, 217 Fed. 33, 133 C. C. A. 143.

Under the provisions of chapter 28 of the Code of Civil Procedure of Alaska, which declares that parties to a question in controversy which might be the subject of an action in a court of record may submit the same to the determination of such court without action, by setting forth in writing the facts upon which the controversy depends, and verifying the same by the oaths of the parties, the parties to the present controversy stipulated the facts in regard to the same in substance as follows: That the defendant, the plaintiff in error herein, a corporation incorporated under the laws of the state of New Jersey, is carrying on a general merchandise and transportation business in the territory of Alaska. That section 460 of the Code of Criminal Procedure of Alaska, as amended by section 29 of the Political Code, provides that any person or persons, corporation, or company, prosecuting or attempting to prosecute any of the following lines of business within the district of Alaska, shall first apply for permission so to do from the District Court or a subdivision thereof in said district, and pay for said license for the respective lines of business and transportation as follows, to wit: Public docks, wharves, and warehouses, 10 cents per ton on freight handled or stored. That during the last three years the defendant has been carrying on a merchandise and transportation business in Alaska, and has handled a large amount of freight, for itself and its shippers, a portion of which freight has been landed at Chena for transportation from that point by rail to the town of Fairbanks. That the defendant contends that it does not maintain or conduct a public dock, wharf, or warehouse at Fairbanks, but it does maintain at Fairbanks warehouses within which it stores merchandise belonging to it, and which it transports by its steamboats from points outside of Alaska to Fairbanks, and in which at times it stores general merchandise belonging to it and its shippers. That its wharf and warehouse at Fairbanks is on the river bank, at which steamers owned by defendant land and unload the freight belonging to the defendant and its shippers, but that no wharfage charge, dockage charge, or storage charge is made for freight so handled upon said wharf. That the defendant does not accept goods on storage for hire, nor does it permit boats other than its own to land at its warehouse and docks for the purpose of unloading goods for hire. That the defendant contends that it should not be compelled to pay a license fee of 10 cents per ton on freight handled or stored by it, but that the United States contends otherwise, and consents that the controversy be submitted to the court for construction. It was further stipulated between the parties that there has been no effort on the part of defendant to avoid payment of the license aforesaid, if defendant is lawfully chargeable therewith. It was further stipulated that, in the event that the court should determine that defendant should pay the license fee, thereupon a referee might be appointed to ascertain the amount of tonnage upon which said fee should be paid, and report to the court, which report should be subject to review by the court as in other matters.

Upon the hearing the court ruled that the defendant is liable for the payment of a license fee or tax of 10 cents per ton on freight handled on its wharf at Fairbanks, consigned and belonging to persons or corporations other than the defendant herein; and the court, for the purpose of having all matters in controversy between the parties made a part of the record, with the consent of the parties, ordered that the statement of facts be supplemented by adding thereto a supplemental paragraph, to be considered as part of the original statement of facts, which paragraph is as follows:

"That since the filing of the original statement of facts in this action, and

during the years 1907, 1908, 1909, 1910, and 1911, defendant has been conducting a wharf in Fairbanks, in the same manner as set forth in the original statement of facts herein, and in connection with these years it is consented that the court, in determining this action, shall determine whether or not the said defendant is liable to pay a license tax or fee on the amount of freight handled upon its wharf at Fairbanks, belonging, consigned to, or consigned by persons or corporations other than the defendant herein, during said years, and the amount thereof; that is to say, that the court shall have jurisdiction in the present action to determine the controversy between the parties plaintiff and defendant from the year 1905 down to and including the year 1911."

Thereafter the court made an interlocutory order appointing a referee, and directed that he take testimony as to the number of tons of freight belonging or consigned to or by persons or corporations other than the defendant during the several years mentioned in the amended and agreed statement of facts. Upon the report of the referee it was adjudged that the defendant pay to the United States a license fee of 10 cents per ton upon the amount of such freight, so handled on its public wharf, amounting to the sum of $2,199.94. From that judgment the present appeal is taken.

Lloyd S. Ackerman, of San Francisco, Cal., and McGowan & Clark, of Fairbanks, Alaska, for plaintiff in error and appellant.

James J. Crossley, U. S. Atty., of Fairbanks, Alaska.

Before GILBERT and ROSS, Circuit Judges, and WOLVERTON, District Judge.

GILBERT, Circuit Judge (after stating the facts as above). The question here presented is whether the wharf used by the plaintiff in error was a public wharf, such as to be subject to the license tax under the statute. In John J. Sesnon Co. v. United States, 182 Fed. 573, 105 C. C. A. 111, we held that the laws of Alaska imposing license taxes on different kinds of business are to be construed liberally, to carry out the purposes of their enactment. In Transportation Co. v. Parkersburg, 107 U. S. 691, 699, 2 Sup. Ct. 732, 27 L. Ed. 584, a private wharf was defined to be a wharf which the owner has constructed and reserves for his private use. The wharf maintained by the plaintiff in error does not come within this definition. It is a wharf which the plaintiff in error operates in connection with its business of a common carrier. In that business it carries the goods of all shippers. It transports upon its vessels goods for the public, and it stores such goods on its wharf, and, while it makes no separate charge for wharfage, it must be assumed that the freight money pays for all services rendered, including the use of the wharf. In John J. Sesnon Co. v. United States, we approved the following instruction which was given to the jury:

"The business of conducting a wharf is a business incident and part of the lighterage business, and you will remember that if they, as a lighterage company, received freight, without any discrimination, as to persons, or as to consignees, from all persons, all comers, all those who applied for the benefit of their lighter plant and their lighter services, why, then, it was a public wharf. If they only landed freight for their own purposes, for their own uses, why then, of course, it would be a private wharf, and would not be subject to a license."

We think it should be held that a wharf is a public wharf, within the terms of the statute, if the public are allowed to use it.

The judgment is affirmed.

(217 Fed. 33)

NORTHERN COMMERCIAL CO. et al. v. UNITED STATES.

(Circuit Court of Appeals, Ninth Circuit. October 13, 1914.)

No. 2293.

1. SUBMISSION OF CONTROVERSY (§ 14*)—RIGHT TO APPEAL—ESTOPPEL TO OBJECT.

Where both parties treated a dispute as one suitable to be submitted to the court without action as a civil controversy, as authorized by Code Civ. Proc. Alaska, c. 28, and it was determined at the trial on that theory without objection, and judgment rendered in favor of defendant, it could not object on appeal that plaintiff was not entitled to have the judgment reviewed, because the subject of the controversy was not one which the parties could lawfully submit to the court for determination without action.

[Ed. Note.—For other cases, see Submission of Controversy, Cent. Dig. § 15; Dec. Dig. § 14.*]

2. STATUTES (§ 217*)—CONSTRUCTION.

Where a statute is ambiguous, the court may put itself as far as possible in the light that the Legislature enjoyed, including the history of the times, to discover the legislative intent, but not so where the language is clear and the meaning obvious.

[Ed. Note.—For other cases, see Statutes, Cent. Dig. § 293; Dec. Dig. § 217.*]

3. STATUTES (§ 225*)—CONSTRUCTION—EARLIER ACTS.

Statutes relating to the same subject, including earlier acts which have expired or been repealed, must be construed in pari materia.

[Ed. Note.—For other cases, see Statutes, Cent. Dig. §§ 302, 303; Dec. Dig. § 225.*]

4. STATUTES (§§ 197, 206*)—CONSTRUCTION—"OR"—"AND."

In construing a statute, effect, if possible, must be given to every word and phrase, so as to render the statute a harmonious whole, and the words "or" and "and" may be convertible, if the sense requires it.

[Ed. Note.—For other cases, see Statutes, Cent. Dig. §§ 275, 283; Dec. Dig. §§ 197, 206.*

For other definitions, see Words and Phrases, First and Second Series, And; Or.]

5. SHIPPING (§ 6*)—LICENSE TAXES—STATUTES—CONSTRUCTION—"NOT PAYING LICENSE OR TAX ELSEWHERE."

Act July 13, 1902, c. 1082, 32 Stat. 385, divided the district of Alaska into three recording and judicial divisions, and Code Cr. Proc. Alaska, § 460, provides that transportation lines, propelled by mechanical power, registered in the district of Alaska, or "not paying license or tax elsewhere," shall pay a license tonnage tax on each vessel, and shall obtain a license to prosecute such business from a district court, or a subdivision thereof, within the district of Alaska. *Held*, that the words "not paying license or tax elsewhere" should be construed as limited to the payment of a license tax under the act in one of the districts of Alaska, and hence a transportation line operating vessels within Alaskan and Canadian waters and paying a tax in Canada was not for that reason exempt from liability for the tax imposed by section 460.

[Ed. Note.—For other cases, see Shipping, Cent. Dig. §§ 12–15; Dec. Dig. § 6.*]

6. SHIPPING (§ 6*)—BARGES—LICENSE TAXES—STATUTE—CONSTRUCTION.

Code Cr. Proc. Alaska, § 460, imposing a license tax on freight and passenger transportation lines propelled by mechanical power, registered

*For other cases see same topic & § NUMBER in Dec. & Am. Digs. 1907 to date, & Rep'r Indexes

in the District of Alaska, includes barges operated by craft propelled by mechanical power.

[Ed. Note.—For other cases, see Shipping, Cent. Dig. §§ 12–15; Dec. Dig. § 6.*]

In Error to and on Appeal from the District Court of the United States for the Fourth Division of the Territory of Alaska; Edward E. Cushman and Peter D. Overfield, Judges.

Submission of controversy between the United States and the Northern Commercial Company and Northern Navigation Company. From a judgment in favor of the United States, the companies named appeal and bring error. Affirmed.

See, also, 217 Fed. 30, 133 C. C. A. 140.

This cause was presented to the trial court, under the title of United States of America v. Northern Commercial Company and Northern Navigation Company, upon an agreed statement of facts, in pursuance of the provisions of chapter 28 of the Code of Civil Procedure of Alaska, whereby it appears that, during the years 1905 and 1906, the defendant the Northern Commercial Company operated certain sternwheel steamboats for transportation purposes on the Yukon river and its tributaries, plying between ports in the district of Alaska and ports in Yukon Territory, Canada, for the operation of which no licenses were procured, and during the same years operated certain other steamboats on the Yukon river and its tributaries, and in the Bering Sea, at points between St. Michael and Fairbanks, Alaska, for which operation licenses were procured in pursuance of section 460 of the Code of Criminal Procedure of the District of Alaska; that for the boats operated between points in Alaska and points in Canada the company was compelled to and did pay to the Canadian government a tax of 8 cents per ton gross, and that the United States was also exacting a tonnage tax of $1 net, customhouse measurement, upon the same vessels, which the Transportation Company resists, claiming that it should not be required to pay such license of $1 per ton on any such river steamboats not operated wholly upon the waters of Alaska. The stipulation setting forth the agreed statement was filed in court October 27, 1906. The cause was not brought on for trial until August 19, 1911, and on the 24th of that month the parties, by order of court. were permitted to amend their statement of facts to cover also the years 1907 to 1911, inclusive.

The statute under which the license tax of $1 net is claimed to be due the government is section 460, supra, and provides that any person, corporation, or company prosecuting any of the following lines of business within the district of Alaska shall first obtain license to do so from a District Court or a subdivision thereof in said district, and pay for said license for the respective lines of business and trade as follows:

"Freight and passenger transportation lines, propelled by mechanical power, registered in the district of Alaska, or not paying license or tax elsewhere, and river and lake steamers, as well as transportation lines doing business wholly within the district of Alaska, one dollar per ton per annum on net tonnage, custom-house measurement, of each vessel.

* * * * * * * * * *

"Ships and shipping: Ocean and coastwise vessels doing local business for hire plying in Alaskan waters, registered in Alaska or not paying license or tax elsewhere, one dollar per ton per annum on net tonnage, customhouse measurement, of each vessel."

The judgment of the trial court being in favor of the government, the defendants prosecute both an appeal and a writ of error.

*For other cases see same topic & § NUMBER in Dec. & Am. Digs. 1907 to date, & Rep'r Indexes

Thomas McGowan and John A. Clark, both of Fairbanks, Alaska, and Lloyd S. Ackerman, William Thomas, Louis S. Beedy, James Lanagan, all of San Francisco, Cal., for appellants and plaintiffs in error.

James J. Crossley, U. S. Atty., and Louis R. Gillette, Asst. U. S. Atty., both of Fairbanks, Alaska.

Before GILBERT and ROSS, Circuit Judges, and WOLVERTON, District Judge.

WOLVERTON, District Judge (after stating the facts as above). [1] Preliminarily, the government challenges the right of the defendants to prosecute either an appeal or a writ of error to this court, on the ground that the subject of controversy is not one which the parties could lawfully submit to the court for determination without an action.

Chapter 28 of the Code of Civil Procedure provides for the submission to the court by the parties involved of a question in controversy which might be the subject of an action, and relates to civil actions or controversies. It is urged that the proceeding is in effect an application for a license, coupled with a protest against being required to take one out as a prerequisite to transacting the particular business desired to be engaged in. But we do not so regard it. It is manifest that there was a dispute between the parties as to whether the defendants were liable to the payment of the $1 net tonnage tax, the government contending for and the defendants against the proposition, and it was no doubt the purpose of the parties by the stipulation to submit the question or controversy to the court for its adjudication.

Were the controversy such as that a civil action would lie, there could scarcely be a doubt that a submission could be had under the statute. We have been cited to no statute by virtue of which a civil action will lie for the recovery of the license tax; but the omission to take out such a license and pay the tax is made a misdemeanor, punishable by fine and imprisonment. However, the parties have seen fit to treat the dispute as one suitable to be submitted to the court for determination, without action, as a civil controversy, and we are not disposed, after the government has acquired the judgment of the court on that theory, to deny the defendants their remedy by appeal or the prosecution of a writ of error from such judgment. It would be unjust that the government should obtain an advantage upon a given theory, and then perpetuate the advantage by a repudiation of such theory. It should be further remarked that the question as to whether the cause was one suitable to be so submitted to the trial court was not once raised in that court.

The principal question arising from the controversy is whether the defendant companies were required by the statute noticed in the statement to procure a license and to pay the tonnage tax imposed during the years involved. This depends wholly upon the proper construction of the statute.

[2] As a premise, certain well-established principles of construction may be recounted. The court may with propriety, where the language of the statute appears to be ambiguous or the meaning doubtful, put itself so far as possible in the light that the lawmakers enjoyed, and

view the situation as it appeared to them, and thereby ascertain and discover the purpose and intendment of the enactment from the language employed, in connection with the attending conditions and circumstances, including the history of the times. United States v. Union Pacific Railroad Co., 91 U. S. 72, 79, 23 L. Ed. 224; Platt v. Union Pacific Railroad Co., 99 U. S. 48, 64, 25 L. Ed. 424; Smith v. Townsend, 148 U. S. 490, 494, 13 Sup. Ct. 634, 37 L. Ed. 533.

It is scarcely necessary to observe that, where the language of the statute is clear and unambiguous, no resort to the rule is essential, for, the meaning being obvious, the statute construes itself.

[3] Statutes relating to the same subject-matter must be construed in pari materia. This may include the earlier acts and such as have expired or been repealed as well. Sections 43 and 48, Endlich on the Interpretation of Statutes.

[4] Effect, if possible, must be given to every word and phase of the statute, so as to render it a harmonious whole; and the words "or" and "and" are sometimes convertible, as the sense may require.

[5] The principal difficulty attending the construction of the present statute hinges about the words "or not paying license or tax elsewhere." The statute was adopted as an amendment of a preceding statute, which read, "Freight and passenger transportation lines, propelled by mechanical power on inland waters, one dollar per ton per annum on net tonnage, customhouse measurement, of each vessel;" the clause relating to ships and shipping being the same as now, with the words "registered in Alaska or not paying license or tax elsewhere" omitted. Act March 3, 1899, c. 429, 30 Stat. 1336.

The later statute, or the one under consideration, was adopted June 6, 1900. 31 Stat. 321, c. 786. It is comprised in an act making provision for a civil government for Alaska, which by its fourth section establishes a District Court, consisting of three divisions, to be presided over by a judge for each division.

By a still later act, approved June 13, 1902 (32 Stat. 385, c. 1082), the district of Alaska was divided into three recording and judicial divisions.

That the statute was intended to require license of vessels doing a transportation business partly on waters of Alaska and partly on waters elsewhere is evidenced by the provision, "as well as transportation lines doing business wholly within the District of Alaska." True, when Congress passed the act, it was doubtless known to it that steamboats and other craft were plying on the Yukon river between points in Alaska and points in Canada, a foreign country, as well as between points wholly in Alaska; but it must be considered that Congress was legislating for the district of Alaska, the object being to provide revenue for carrying on its governmental affairs, and the new statute has added another subject touching which revenue may be exacted.

Plaintiffs in error insist that the words "or not paying license or tax elsewhere" must be given a general application, and that the intendment of the statute is that they shall relate to the payment of a license or tax in Canada, or other place outside the territory of Alaska, as well as in Alaska.

It may be that Congress was apprised that such vessels would be subject to a tax in Canada; but, in view of the fact that they were made the subject of license for revenue in the district of Alaska, it can hardly be supposed that it intended, at the same stroke of the pen, to exempt from license the very subject designed by it for producing revenue at home, or to make such revenue dependent upon whether some foreign country should exact a tax upon the same subject. Under such a construction the legislation for revenue purposes might prove entirely futile, and, indeed, it would in the present case as to the added subject, as all the vessels plying on the Yukon between Alaska and Canada are subject to a tax in Canada.

Looking further into the statute, the transportation lines are required to apply for and obtain the license from a District Court, or a subdivision thereof, in the district; there being three judicial divisions, as we have seen. It seems, therefore, more in consonance with the purpose of Congress to interpret the clause as being addressed to the court as well as for the delimitation of the license, and if the transportation line or lines are paying the license or tax in some other judicial division of the territory, then it or they would not be further subject to the license tax. In other words, these words simply qualify the subject designated for license, so that the tax may not be imposed in more than one judicial subdivision of the territory. This is the only rational rendition which will give practical effect to the statute, and at the same time give meaning and effect to all the words of the statute. The clause relating to ships and shipping would seem to bear out this construction. It was simply designed to make ocean and coastwise vessels doing a local business subjects of a license tax for territorial revenue purposes, and it was not intended to exempt such vessels from the tax because they might be paying a license or tax somewhere else in the United States or foreign countries. It is only where they are paying a license or tax in some other judicial division of the territory that they will be thus exempt.

We have not overlooked the grammatical construction given the statute by Professor Gayley. It is interesting and academically instructive, but where the language is ambiguous, or its meaning involved, such construction must give way to the settled rules of legal construction.

[6] Another question submitted is whether the statute applies to barges. If used in connection with mechanical-power propelled craft, there exists no reason why they should not also be subject to the same license or tax. As the tug and tow are often one in legal parlance, so when a barge is pushed forward through means of a vessel propelled by mechanical power, and used for transportation of freight or passengers, the two vessels are in practical effect one, and must submit to the license or tax.

The judgment of the trial court will be affirmed.

(217 Fed. 38)

PITTS BANKING CO. v. CLAYTON.

In re CHANDLER.

(Circuit Court of Appeals, Fifth Circuit. October 5, 1914.)

No. 2505.

EVIDENCE (§ 575*)—COMPETENCY—TESTIMONY GIVEN BY WITNESS IN PRIOR PROCEEDING.

Where a bankrupt, as a witness for the plaintiff in an action by his trustee to recover preferences, gave testimony favorable to defendant, plaintiff was entitled to show that he had given contradictory testimony on a hearing before the referee for the purposes of impeachment, but such testimony was not admissible to prove the facts alleged, and its submission to the jury generally to be considered by them on the issues was prejudicial error.

[Ed. Note.—For other cases, see Evidence, Cent. Dig. §§ 2407-2409; Dec. Dig. § 575.*]

In Error to the District Court of the United States for the Southern District of Georgia; Emory Speer, Judge.

Action at law by Cook Clayton, as trustee in bankruptcy of Gray Chandler, against the Pitts Banking Company. Judgment for plaintiff, and defendant brings error. Reversed.

John R. L. Smith, of Macon, Ga., and J. T. Hill, of Cordele, Ga., for plaintiff in error.

Andrew H. Heyward and J. N. Talley, both of Macon, Ga., for defendant in error.

Before PARDEE and SHELBY, Circuit Judges, and FOSTER, District Judge.

FOSTER, District Judge. In this matter Cook Clayton, trustee of Gray Chandler, bankrupt, filed his suit against the Pitts Banking Company to recover $1,732.45, the aggregate of some six or more payments made to the bank within four months of the adjudication and alleged to be preferential. The bank admitted receiving payments aggregating $748.42 on certain notes of Chandler, but denied knowledge of his insolvency at the time, or that same constituted preferences. At the close of the evidence the bank moved for a directed verdict in its favor, which was denied. On the trial the plaintiff offered Chandler as a witness. He testified that his business was running along as usual in November, 1910, and he was paying some of his debts, and thought if his goods could be sold at a reasonable profit he would break even, and that the bank was not pressing him. Certain evidence given by him before the referee on a previous occasion, tending to contradict his statement that the bank was not pressing him, was then read to him. He was cross-examined by the court concerning the discrepancy, and attempted an explanation, which apparently was not satisfactory. He was then admonished as follows:

"This is a very serious matter, Mr. Chandler; you are sworn to tell the truth, the whole truth, and nothing but the truth, and not to do that is to

*For other cases see same topic & § NUMBER in Dec. & Am. Digs. 1907 to date, & Rep'r Indexes

commit perjury, and perjury is a punishable offense; a man doesn't commit perjury in this court, if the court knows it, without having to undergo a trial for it."

In the course of his charge the court took occasion to say:

"You must bear in mind the testimony of all the witnesses, and you must consider the testimony of the bankrupt himself. How was it that he testified on direct examination here, after being put up by Mr. Talley for the trustee as his witness, that the bank did not push him for money? Did he try to convey the impression to the jury that the bank had no reason to know his condition? Yet when we turn to the evidence before the referee it is as follows: 'Q. Didn't they know you were in pretty bad shape financially? A. Yes, sir.' That is an important fact within itself. 'Q. Didn't they know you were in pretty bad shape financially? A. Yes, sir. Q. Who knew that, the cashier? A. The cashier and the directors both knew it, I suppose. Q. How did they know it? A. I had been owing the bank some money some time. Q. Did you have some talks with them just before you left about your condition—tell them you were pretty hard-pressed? A. No, sir. Q. They had been pressing you for payment? A. Yes, sir; they had been squeezing, pushing, wanting money.' Now he tells you the securities wanted that. Is that true? Take the whole case together, the testimony before the referee, did he tell the truth then? If that was the truth, did the bank have a reasonable opportunity to know his financial condition and otherwise that this payment was a preference? Didn't it know that he was in pretty bad shape? He said the directors and cashier both knew it. What is the truth about it? That is for you gentlemen to find."

Defendant excepted to this portion of the charge upon the ground that the report of Gray Chandler's testimony before the referee was not in evidence, and the following colloquy took place:

"The Court: Was not that testimony put in evidence?

"Counsel for Plaintiff: No, sir; but Gray Chandler admitted on the stand here to have so testified before the referee.

"The Court: I withdraw what I said about the evidence taken before the referee, and you will only bear in mind, gentlemen, that portion which Gray Chandler testified to be true here."

Defendant again excepted on the ground that it was not proper to submit either his admission as to what he testified before the referee or the report of the testimony before the referee as evidence of the fact, as it could only be admitted for the purpose of tearing down what he testified to on the stand. Thereupon the court further charged the jury as follows:

"I will modify my charge in that respect, gentlemen. *The evidence which he recited from the stand here that he gave before the referee may or may not be sufficient, as you may regard it in connection with all the other testimony in the case, to show that in point of fact the bank was 'pushing and squeezing' him.* (Italics ours.) You must take his evidence here on that subject in connection with all the other evidence in the case and determine what is the truth. If you believe from his evidence here that he testified one way there, and you see from his evidence and bearing and everything else connected with his manner of giving testimony here that he was leaning improperly toward the defendant here, you can consider it, and take together all the circumstances, and regard that as a circumstance, with the other facts in the case, as illuminative of your efforts to find out what is the truth, viz.: Was the bank pushing him or was it not pushing him?"

The defendant then excepted to said portion of said charge, and instructions as so modified, upon the grounds previously urged, with some amplification. The court declined to further modify the charge, and the

case went to the jury, and resulted in a verdict for plaintiff, on which judgment was subsequently entered. Defendant assigns as errors the overruling of its motion to direct and the remarks of the judge above quoted.

In the view we take of the case, it is unnecessary to further recite or analyze the testimony, except to say that but for the evidence of Chandler given before the referee there was nothing to indicate that the bank was pressing him for payment of his notes. On the contrary, both he and the cashier, who was the only officer in active charge of the bank, testify that it was not pressing him. The importance of Chandler's testimony before the referee had been accentuated by the cross-examination of the court and the admonition to the witness. In this situation it was vitally essential to the defendant that the jury be charged clearly regarding the probative effect of Chandler's former testimony. No objection was raised to its use to show his contradictory statements, and no point is now made on that ground, but in any event it could only be used to impeach his credibility, and could have no effect to prove the facts therein shown. As to this the text-writers agree, and the rule is thus clearly stated by Mr. Jones:

> "In some states the statute broadly provides that the one producing a witness may show that at other times he has made statements inconsistent with his present testimony. But under these statutes the courts have frequently rejected such testimony unless surprise or hostility was shown. And when received the courts hold that such statements are admissible *only for the purpose of impeachment* and not to prove the truth of the facts stated in the declaration." Jones on Evidence, paragraph 855.

The portion of the charge complained of was prejudicial to the defendant. To this the judge's attention was called by timely exception. There is nothing in the charge as originally given that would tend to offset or neutralize the effect of the above quoted remarks, and the subsequent modifications do not help matters. On the contrary, they could have no other effect than to give the jury to understand that they might consider Chandler's evidence before the referee as sufficient to show that in point of fact the bank was "pushing and squeezing" him, and that it was an important fact on which recovery might depend.

The charge was error. As for this reason the judgment must be reversed, it is unnecessary to pass on the other assignment.

Reversed and remanded.

(219 Fed. 45)

KENTUCKY COAL LANDS CO. v. MINERAL DEVELOPMENT CO.

(Circuit Court of Appeals, Sixth Circuit. December 9, 1914.)

No. 2487.

1. COURTS (§ 7*)—NATURE OF ACTION—"LOCAL" OR "TRANSITORY ACTION."
An action of ejectment under the Kentucky Code, which permits also the recovery of damages for detention, is a "local" and not a "transitory action."†

2. COURTS (§ 269*)—JURISDICTION OF FEDERAL COURTS—LOCAL ACTIONS.
Under Judiciary Act March 3, 1875, c. 137, §§ 1, 8, 18 Stat. 470, 472, as amended by Act March 3, 1887, c. 373, § 1, 24 Stat. 552, and Act Aug. 13, 1888, c. 866, § 1, 25 Stat. 433 (Comp. St. 1913, §§ 991 [1], 1039), as before their enactment, a federal court of the district in which the property, which is the subject-matter, is situated, has jurisdiction of the local actions described in said section 8, where the necessary diverse citizenship exists, without regard to the residence of the parties.

[Ed. Note.—For other cases, see Courts, Cent. Dig. § 809; Dec. Dig. § 269.*]

3. BOUNDARIES (§ 40*)—LOCATION OF LINES—QUESTIONS FOR JURY.
The location of the lines of a survey *held*, under the evidence, a question of fact for the jury, under the Kentucky rule of decision that, where the language used is ambiguous, the lines the surveyor intended to describe by such language must govern.

[Ed. Note.—For other cases, see Boundaries, Cent. Dig. §§ 196-204; Dec. Dig. § 40.*]

4. COURTS (§ 96*)—RULE OF STARE DECISIS.
Under the rule of stare decisis, a decision of the Circuit Court of Appeals in a suit in equity, in which it considered the questions of both fact and law, determining the lines of an old survey, is binding only as to the matters of law decided, and in a subsequent action at law between different parties, but involving the same survey, where there is additional evidence raising new questions of fact, the prior decision does not preclude the submission of such questions to a jury.

[Ed. Note.—For other cases, see Courts, Cent. Dig. §§ 325, 327, 328, 334; Dec. Dig. § 96.*]

5. WORDS AND PHRASES—"JURISDICTION."
Jurisdiction is the power to proceed by authorized service.

[Ed. Note.—For other definitions, see Words and Phrases, First and Second Series, Jurisdiction.]

In Error to the District Court of the United States for the Eastern District of Kentucky; Andrew M. J. Cochran, Judge.

Action by the Kentucky Coal Lands Company against the Mineral Development Company. Judgment for defendant, and plaintiff brings error. Reversed.

For opinion below, see 191 Fed. 899.

*For other cases see same topic & § NUMBER in Dec. & Am. Digs. 1907 to date, & Rep'r Indexes

† See note at end of case.

E. C. O'Rear, of Frankfort, Ky., and R. D. Silliman, of New York City, for plaintiff in error.

S. B. Dishman, of Barboursville, Ky., and E. L. Worthington, of Maysville, Ky., for defendant in error.

Before WARRINGTON, KNAPPEN, and DENISON, Circuit Judges.

DENISON, Circuit Judge. The plaintiff in error brought what was called an action of ejectment in the state court against the defendant in error. The parties will be named herein as they were called below. The defendant removed the case into the court below upon the ground of diverse citizenship; its petition for removal showing that plaintiff was a citizen of New York and defendant was a citizen of Virginia. The plaintiff moved to remand; its motion being based on the ground that neither party was a resident of the Eastern District of Kentucky. The motion to remand was denied, and plaintiff assigns error thereon.

When the case came on for trial on the merits before a jury, it developed that the Kentucky patent on which plaintiff's title depended was the same one which had been involved and had been considered by this court in Mineral Co. v. Tuggle Co., 151 Fed. 450, 81 C. C. A. 34; and the District Judge, thinking that the question here was only the construction of the patent and so was a question of law, and that it had been decided by this court in the former case, directed a verdict for defendant. Error is also assigned upon this ruling.

Having in mind that a suit cannot be removed from a state court to the United States District Court of a district in which it could not have been brought (Ex parte Wisner, 203 U. S. 449, 27 Sup. Ct. 150, 51 L. Ed. 264; In re Moore, 209 U. S. 490, 28 Sup. Ct. 585, 706, 52 L. Ed. 904, 14 Ann. Cas. 1164), it is apparent that the right of removal in this case depended on the answer to this question:

> "Was the general grant of jurisdiction found in the earlier part of section 1 of the act of March 3, 1887, covering cases where the matter in controversy exceeds the jurisdictional amount, and is between citizens of different states, so limited by the later part of the same section that such an action as this could not be brought at all in the federal courts, unless the land involved lay in the district of the residence of the plaintiff or the defendant?"

[1] The common-law action of ejectment was classified as mixed rather than as either real or personal; but the actions which are commonly called by that name, when brought under Codes like that of Kentucky, are purely actions to recover the property. As is said of the Code action in Pomeroy on Code Remedies (3d Ed.) 294:

> "It far more nearly resembles, in all of its essential features, the ancient real actions which were displaced in use by ejectment. * * * It does not bear the slightest resemblance to the action of ejectment as that was contrived by the old judges and lawyers, and only confusion and misconception result from applying to it that name."

While the petition in this case prays both that plaintiff be adjudged the owner of the described tracts and that it recover damages for the

unlawful detention, yet the action to recover the land itself is none the less a real action because there is united with it, under the permission of the Code, another action which is personal; and it is enough for the present inquiry if there is disclosed on the record one separable controversy properly removable to the federal courts, since in that case it is immaterial that another nonremovable controversy is joined. Barney v. Latham, 103 U. S. 205, 210, 26 L. Ed. 514. The distinctive character of the action makes it clear that it is a local and not a transitory action, because that is true even of a common-law ejectment. Northern Indiana Co. v. Michigan Central Co., 56 U. S. (15 How.) 233, 242, 14 L. Ed. 674.

[2] Assuming then, as we must, that the present action is local, not transitory, we meet the question whether it is affected by the limitation as to residence found in the latter part of the section, or whether that limitation pertains only to transitory actions. The Supreme Court has several times said that this clause or its predecessor in the statutes is not one pertaining to jurisdiction, but rather to venue or to territorial distribution (In re Hohorst, 150 U. S. 653, 660, 14 Sup. Ct. 221, 37 L. Ed. 1211; Sweeney v. Carter Co., 199 U. S. 252, 256, 26 Sup. Ct. 55, 50 L. Ed. 178); and yet, as to those classes of actions to which the restriction does pertain, it is hard to see why the failure to distribute the action anywhere is not as fatal as would be the failure to grant jurisdiction at all; so the real inquiry must be whether the limitation does pertain to local actions.

The decision of the Supreme Court in Casey v. Adams, 102 U. S. 66, 26 L. Ed. 52, goes far towards answering the inquiry; perhaps it is a complete answer. One section of the National Banking Law provided that suits against a bank might be brought in any court of the United States within the district in which the bank was established, or in any state court held in the county or city where the bank was located. This provision was broad and general, and upon its face applied to any and every action, personal or real, local or transitory. It differed from the residence limitation clause of section 1 of the act of 1887 only in that the prohibition against suits in other territorial divisions was implied instead of expressed; yet, under the rule that whatever is not named in such enumeration is excluded, it would seem clear enough that a transitory action against such a bank could not have been brought in any place not specified in the permission; and the court seems to have assumed that, if the statute applied at all to the action there involved, the suit must be dismissed. However, the court had no difficulty in finding, from the necessity of the case, an exception not hinted at in the language of the statute. Chief Justice Waite said (at page 67 of 102 U. S. [26 L. Ed. 52]):

"This, we think, relates to transitory actions only, and not to such actions as are by law local in their character. Section 5136 [Comp. St. 1913, § 9661] subjects the banks to suits at law or in equity as fully as natural persons, and we see nowhere in the Banking Act any evidence of an intention on the part of Congress to exempt banks from the ordinary rules of law affecting the locality of actions founded on local things. The distinction between local and

transitory actions is as old as actions themselves, and no one has ever supposed that laws, which prescribed generally where one should be sued, included such suits as were local in their character, either by statute or the common law, unless it was expressly so declared. Local actions are in the nature of suits in rem, and are to be prosecuted where the thing on which they are founded is situated. To give the act of Congress the construction now contended for would be in effect to declare that a national bank could not be sued at all in a local action where the thing about which the suit was brought was not in the judicial district of the United States, within which the bank was located. Such a result could never have been contemplated by Congress."

If Casey v. Adams may be distinguished because of the less positive character of the limitation in the Banking Act as compared with that in the act of 1887, it becomes necessary to make further study of the latter.

As matters stood under the Revised Statutes, jurisdiction of cases of diverse citizenship was conferred by section 629, and there was no reference to the residence of either party. The distribution of the jurisdiction (that is, the venue of the action) was taken up generally by section 739, which said that, except in the cases provided in the preceding section and in the following three sections, suits must be brought in the district whereof the defendant was an inhabitant or was found. The preceding section (738) refers to suits "to enforce any legal or equitable * * * claim" against property in the district, and provides for service by publication. Section 740 refers to suits not of a local nature, where different defendants live in different districts of the same state; section 741, to suits of a local nature, where the defendant resides in another district in the same state; and section 742 to suits of a local nature, where the "land or other subject-matter of a fixed character lies partly in one district and partly in another"—providing that in such case suit may be brought in either district, and process be executed "as fully as if the said subject-matter were wholly within the district" in which the suit is brought.

Considering together these sections 629 and 738–742, the arrangement is clear and logical. Section 629 conferred jurisdiction. Section 739 (by itself and by virtue of the reference therein contained to sections 741 and 742) distributed the cases by one method as to local actions and by another method as to other actions; and sections 738, 740, and 741 provided methods of service, where the defendant was not found within the district.

The act of 1875, by section 1, revised section 629, and in the midst of it inserted the substance of section 739. By section 8 of this act there was a revision and re-enactment of section 738. Sections 740, 741, and 742 were neither re-enacted nor expressly repealed. Whether they, and especially section 742, have been repealed by implication, was a question which the Supreme Court suggested but left undecided. Greely v. Lowe, 155 U. S. 58, 15 Sup. Ct. 24, 39 L. Ed. 69; Petri v. Creelman, 199 U. S. 487, 493, 26 Sup. Ct. 133, 50 L. Ed. 281; and Galveston Co. v. Gonzalez, 151 U. S. 496, 499, 14 Sup. Ct. 401, 38 L. Ed. 248. That there was no such repeal, but that the sections, or some of them, continued in force, was held by Judge Speer, at the Circuit

(East Tennessee R. R. Co. v. Atlanta Ry. Co. [C. C.] 49 Fed. 608), by Judge Coxe in Goddard v. Mailler (C. C.) 80 Fed. 422, and by Judge—later Justice—Lurton in Horn v. Pere Marquette Ry. Co. (C. C.) 151 Fed. 626. The reasoning of these cases is forceful, and, if they are rightly decided, they are persuasive that the jurisdiction over local actions continued after 1875 as before. Section 738, as above stated, was substantially re-enacted by section 8 of the act of 1875, and by section 5 of the act of 1887, and has continuously been the law. It has been spoken of as if it directly conferred jurisdiction of the cases to which it refers. Mellen v. Moline, 131 U. S. 352, 365, 9 Sup. Ct. 781, 33 L. Ed. 178; Jellenik v. Huron Co., 177 U. S. 1, 11, 20 Sup. Ct. 559, 44 L. Ed. 647; Citizens' Co. v. Illinois Central R. Co., 205 U. S. 46, 59, 27 Sup. Ct. 425, 51 L. Ed. 703.

[5] Such references are appropriate to the cases where made, because they involved the getting of jurisdiction (i. e., power to proceed) by authorized service; but in the broader sense of the term "jurisdiction," it is quite plain that this section 8 only provides a method of obtaining service in those cases of which it assumes the court already has general jurisdiction. Greely v. Lowe, 155 U. S. 58, 15 Sup. Ct. 24, 39 L. Ed. 69; Tug River Coal Co. v. Brigel (C. C. A. 6) 67 Fed. 625, 629, 14 C. C. A. 577. Its true office in the present inquiry is not to create jurisdiction, but to raise the necessary implication that jurisdiction exists by other statutes, and so to determine the interpetation of those other statutes. Taking for illustration a bill to remove a cloud from real estate—a case clearly within this section—it would be useless to make and carefully preserve this section for serving process in such a case on a defendant who did not live in the district, if no such action could be brought in that district; and the existence of this provision compels us to conclude that when section 1 required suit to be brought only in the district where the defendant lived, it did not refer to a bill to remove cloud. While this reasoning, as applied since 1887, stops short of being conclusive, because section 8 might still have occasional application in those instances where the land was situated in the district of plaintiff's residence, and so the suit could be there brought for that reason, yet considering the history of the various sections, and the exceptional character of this supposed instance, the argument is strongly convincing. It seems hardly necessary to say that section 8 cannot create or imply jurisdiction in a particular district court in cases where resort to substituted service is necessary, and fail to have the same effect in the same case, if by chance the defendant is found in the district. For these reasons section 8 alone strongly implies that the general plan of the Revised Statutes is not intended to be disturbed, and that after the acts of 1875 and 1887, as before, the federal courts had full jurisdiction of local actions where the necessary diverse citizenship existed, and without regard to the residence of the parties. If section 742 continued unrepealed, this inference would seemingly be inevitable.

It must be conceded that some doubt is cast upon this broad implication by Ladew v. Tennessee Co., 218 U. S. 357, 31 Sup. Ct. 81, 54 L.

Ed. 1069, and Wetmore v. Tennessee Co., 218 U. S. 369, 31 Sup. Ct. 84, 54 L. Ed. 1073. In the latter case, the plaintiff's land, continuing injury to which was alleged, was in the Eastern District of Tennessee —the district where the federal court was sitting—and the action was of a character often called local. If it was, for the purpose of that case, rightfully to be so considered, then we must infer from the decision that the District Court does not take jurisdiction of a local action, qua local, and probably that section 742 was repealed, and that Horn v. Pere Marquette, supra, is, to that extent, overruled. On the other hand, such an action was surely transitory under the Tennessee rule (Ducktown Co. v. Barnes [Tenn.] 60 S. W. 593), and the federal courts follow the state rule on this subject (Huntington v. Attrill, 146 U. S. 657, 669, 13 Sup. Ct. 224, 36 L. Ed. 1123; Peyton v. Desmond [C. C. A. 8] 129 Fed. 1, 4, 63 C. C. A. 651). However this may be, we need not go to this extent and say that jurisdiction over all local actions is preserved to the local district. It certainly is so continued as to the actions described in section 8; and the present action—at least if we omit the separable demand for damages—we deem clearly within the description of section 8. It has so been held even with reference to the common-law ejectment action in two well-reasoned cases. Spencer v. Kansas City Co. (C. C.) 56 Fed. 741; Elk Garden Co. v. Thayer Co. (C. C.) 179 Fed. 556. The opinions of the Supreme Court in the Wetmore and Ladew Cases, supra, are not to the contrary. It is as hard to see how Wetmore's claim for damages to his land in the district, by the distant operation of defendant's smelter, could be thought within the description of section 8, as it is difficult to understand wherein the present suit to have title adjudicated and to get possession falls short of being a suit "to enforce any legal * * * claim to * * * real or personal property within the district." We, therefore, must conclude that section 8 provides a method of getting service upon the defendant in such an action as this, though the defendant does not live in the district, and whether or not the plaintiff does, and so necessarily implies that the jurisdiction apparently existing because of diverse citizenship is not cut off because neither party lives in the district.[1]

This action was brought before January 1, 1912, when the present Judicial Code went into effect. It is significant that this Code, while retaining the language of the latter part of section 1 of the act of 1887 to the effect that these suits can be brought only in the residence district of one party or the other, goes back to the arrangement of the Revised Statutes. This limiting or distributing clause is no longer found in subdivision 1 of section 24, but takes its place in section 51, and is a complete restoration of section 739 of the Revised Statutes. It is expressly said that this residence limitation shall apply, "except as provided in the six succeeding sections," and one of these succeeding sections (57) is the same as R. S. 738, and section 8 of the act of 1875,

[1] Reference should be had to the exhaustive discussion by Judge Cochran, in the court below, on the motion to remand (C. C.) 191 Fed. 899. See, also, cases cited by Judge Sanford, in Western Union Co. v. Louisville Co. (D. C.) 201 Fed. 932, 943.

and another (55) is the same as R. S. 742. The very enactment of this Code, so clearing up all the confusion that had arisen since 1875 on this point, would be of some force as a legislative declaration of the unbroken meaning of these provisions; but this declaration seems very clear when we consider also sections 294 and 295 of the Code, and the

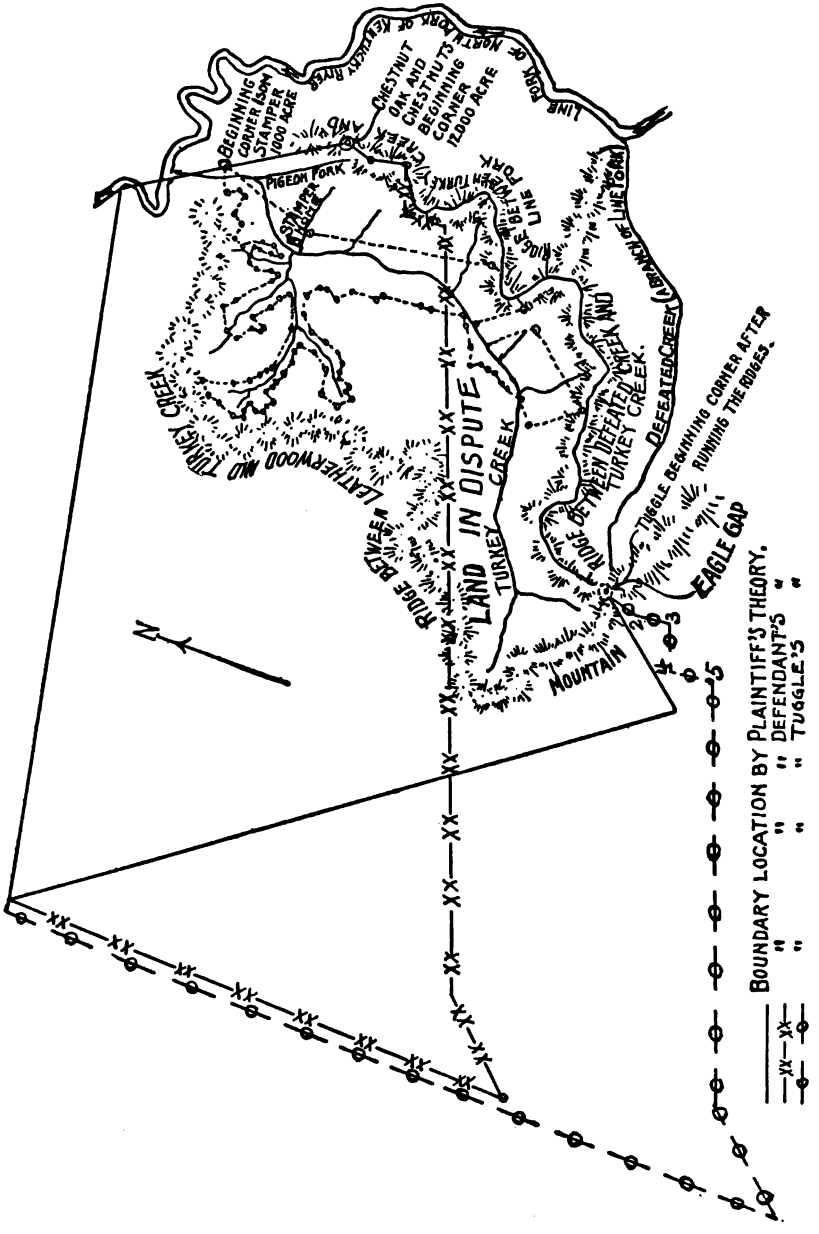

revisers' notes stating that section 51 "re-enacts existing law." If there was any doubt remaining about the question which has been discussed, it would be removed by the implications which must be drawn from these sections of the Code. United States v. Freeman, 3 How. 556, 564, 11 L. Ed. 724.

[3] Having concluded that the court acquired jurisdiction, it becomes necessary to determine whether it properly directed a verdict for defendant. This depends upon the construction and location upon the ground of the 12,000-acre grant to Isom Stamper, made by the state of Kentucky in 1848, pursuant to the survey in 1846. According as we adopt the contentions of the plaintiff or the defendant, now presented, we will include or exclude from the grant the upper half of the course of Turkey creek and its watershed on both sides. This will be a tract of approximately 2,500 acres. The present suit involves the title to two subtracts out of this 2,500 acres. The trees upon these two subtracts were, in 1903, sold by the plaintiff, then holding and claiming the same title as now, to the Tuggle Land Company; and to prevent interference with such timber, the Tuggle Land Company brought, in the court below, an action in equity against the defendant, then holding and claiming the same title as now. That action reached this court, and its opinion is reported in 151 Fed. 450.† It was decided that the Isom Stamper patent in question did not cover these tracts, and the defendant's title thereto was approved. Obviously, if the parties in the present case were the same as in the Tuggle Case, the question now presented would be res judicata; but since there is neither identity nor privity between the plaintiffs there and here, the court below rightly considered that the controlling principle was one of stare decisis—in other words, the court below thought that the former decision of this court amounted to a construction of the contract or a declaration of the legal effect of the terms of the grant and their undisputed environment—and so it held that, as matter of law, the grant was to be located on the ground as the defendant claimed then and now and so as to exclude the land in dispute. This brings us necessarily to the terms of the grant; and since the previous case was in equity, in which this court heard and decided facts as well as law, it also is to be considered how much of the decision was matter of law, which must (at least presumptively) now be followed, and how much was matter of fact, which cannot control the action of a jury in a subsequent case between other parties.

The controversy cannot be well comprehended, except by reference to the map reproduced on the preceding page. This discloses three theories, or contentions, as to how the terms of the survey should be applied upon the ground. As shown by the legend, one line indicates the proper location according to the theory of defendant, another according to the theory of plaintiff, and another according to the theory of the Tuggle Land Company, plaintiff in the former suit. It should be said that all the controversy in the former suit and in this has been with reference to the southern line, and that the true locations of the northern and western lines have not been and are not now involved. The language of the grant is as follows:

"Beginning on three chestnuts and chestnut oak near the head of the Pigeon fork thence running the dividing ridge between Turkey creek and the

† 81 C. C. A. 34.

Line fork to the Defeated branch thence the dividing ridge between the Defeated branch and Turkey creek S. 10 W. 68 poles to a chestnut, S. 10 E. 98 poles to a chestnut oak and sarvis S. 68 W. 125 poles to a stake, thence S. 5 E. 100 poles to a stake, thence S. 68 W. 2,000 poles to a stake, thence S. 40 W. 320 poles to a stake, thence N. 1,328 poles to a stake, thence N. 77 E. 1,900 poles to a stake, thence S. 33 E. 600 poles to the beginning."

The beginning corner is not in dispute. Aside from such complications as might come from the uncertain location of the stake calls, difficulties arise from the presence of the language "thence running the dividing ridge between Turkey creek and the Line fork to the Defeated branch, thence the dividing ridge between the Defeated branch and Turkey creek." This may refer to two distinct courses, first along one ridge and then along another, or it may refer to one course along a continuous ridge described in terms of its two parts. Under either of these views, doubt arises whether this language is intended of itself to describe and constitute a boundary or boundaries, or whether it is only descriptive of the locality upon which the other boundaries described by course and distance should be located. If the latter, then we see at once that there is no certainty as to when the boundary of stated courses and distances leaves the ridge or ridges, and is to be located independently of that aid. Manifestly, it must leave at some time, but, on the face of the description, there is no indication which stake call is the last one located on the ridge.

If these described ridges constitute of themselves two independent boundaries, then the description has 11 distinct sides, and is an 11-call survey; but if neither of these ridges is itself a boundary, and they constitute only monuments by the aid of which the stake calls are to be located, it is a 9-call survey.

It was the contention of plaintiff Tuggle, in the former case, that the survey had 11 sides; the defendant in that case contended for a 9-sided figure, as shown on the map. This court decided, under the case there presented (and from which the testimony in the present record does not differ, so far as it affects the point now mentioned), that the theory of 11 sides was wholly untenable. The court thereupon adopted the only alternative theory then suggested, viz., the defendant's theory that there were nine boundaries, and that they were located exactly according to the stated courses and distances. By this theory the first two boundaries substantially followed the ridge; the third and fourth followed it approximately; but the fifth, which was a line about six miles long, departed entirely from the ridge and, crossing Turkey creek and leaving out a large part of its valley, led off into the higher mountains to the west.

In the present case, plaintiff insists upon a third theory of construction and locatio, which adopts a figure of nine boundaries, but makes a different location. The first and second boundaries are located along the top of the ridge, just as done by defendant; the third and fourth courses, instead of being run "S. 10 W. 125 poles to a stake," and "thence S. 10 E. 100 poles to a stake," thereby carrying these two stakes partly down the slope of the ridge, are proposed to be run south about 45° west about 125 poles to a distinct bend in the ridge, and thence south about 45° east about 160 poles, thereby

keeping the line approximately upon the summit of the ridge, and bringing the last-named stake to a point where the ridge makes a very sharp, almost right-angled, turn. Instead of then running the fifth boundary, as defendant does, wholly away from the ridges, across the valley and up the opposite mountains on its stated course, plaintiff proposes to run this course winding along the summit of the ridges until it reaches the end of the second ridge, at the point marked on the map "Eagle Gap." The first mile of this course, and after a southerly bend, then again about three miles, will average not far from 68° west, the stated course. The intermediate and the final half miles (approximately) swing sharply south, so that the supposed terminus, Eagle Gap, would be south about 45° west from its supposed starting point, at a distance of about 1,200 poles in a straight line, and about 1,800 poles along the course. The remaining four boundaries, plaintiff proposes to run according to the stated courses and distances, with only such variations as may be thought proper to compensate for the changes made in the first five lines and appropriate to close the figure. Under any method, starting from Eagle Gap and getting to the beginning point, they will inclose all the land in controversy.[2]

It is entirely clear to us, even if it had not been formerly decided, that these ridges were not intended to be of themselves, boundaries, but that they were intended, as said in our former opinion, to serve as aids in locating the opening calls of the survey. Natural objects, thus collaterally named, are not monuments in the sense in which that term is used with reference to termini, but they have no less positive effect. It is settled in Kentucky that where a boundary runs in a stated compass course, and is also said to be along a river or along a ridge, the compass course must yield to the course described by reference to the natural objects, so far as there is necessary inconsistency between the two courses, and following the sinuosities of the stream or ridge or running in a straight line as other considerations may determine. Bramblette v. Howard (Ky.) 93 S. W. 902, and cases cited. So much, viz., that the ridges are not boundaries but are aids in the nature of monuments, is clear upon the face of the grant, when once the court is informed as to the general topography of the country. It is equally sure that at this point certainty ends and ambiguity begins. The ridges are to be used for locating the "opening calls." Does that mean the first two, or the first four, or the first five? The terms of the grant suggest no answer. If it is once conceded, as it is (plaintiff and defendant agree that the first two boundaries were marked on the ground, and the third corner established on or near the summit), that this "aid" applies to more than the first course, it cannot be certainly known that the aid should be abandoned until it has been exhausted by reaching the end of the

[2] Our statements as to the courses and distances of the southern boundaries, when run according to plaintiff's theory, we have estimated by reference to the map made by plaintiff's surveyor. They should therefore be taken only as stating what plaintiff's evidence tended to show, and they are not intended to be mathematically accurate.

ridges. Whether it should leave the ridges at the end of the second course, as defendant contends, or at the end of the fifth course, as plaintiff contends, or at the beginning of the fifth course (a construction satisfactory to neither), must depend upon the question of intent—what land did the surveyor intend to include within the stated boundaries—when did he intend to leave the ridges? Of course, we do not refer to any secret intent, or one not inferable from his chosen words when properly interpreted, and it would be more accurate to say "What did he intend his language to mean?" Doubtless, where the description is clear upon the face of the instrument and is not varied by proof of actual and inconsistent location upon the ground, it will be of no importance that the surveyor intended to include something else; but, where the description is fairly capable of being understood in more than one way, the liberal rule of Kentucky does not pronounce it void, but ascertains the real intent of the language. It is only because intent is, in such cases, the controlling element that a monument controls an inconsistent course or distance, and that the actual running on the ground, when proved, controls the described line. That such intent is thus, in such cases, the ultimate inquiry, is the clear rule in Kentucky.

In Mercer v. Bate, 4 J. J. Marsh, 334, 344, the court said:

"But there is, in this respect, a palpable and essential difference betwixt an actual and an ideal line, or a marked and open line. And as in the one case Madison might be bounded by the marked line wheresoever it might be (if he made no mistake), so in the other he must be restricted to the line as it appeared to be, and as he believed it was when he called to adjoin it. In the first case, he would have a right to the marked line, because, being visible, he knew where it was, and therefore intended that, as marked, it should be his boundary. In the last case, for the very same reason, wherever he supposed the invisible lines to run, he must be bounded, because be intended when he made his survey to be, and therefore was bounded by it."

In Ralston v. McClurg, 39 Ky. (9 Dana) 338, it was said:

"And the cardinal object is to ascertain what the surveyor would have done if he had gone on to complete the work. Beckley v. Bryan, etc. [Ky. Dec. 91; Preston's Heirs v. Bowman] 2 Bibb, 493. This is to be ascertained, not by vague conjecture, but by rational deductions from his report, as compared with the existing facts."

Obviously, such intent will be a question of law for the court, if there is no dispute of fact (though such conflict may lie, not in the primary facts, but rather in the inferenial facts to be deduced therefrom (Watkins v. King [C. C. A. 4] 118 Fed. 524, 534, 55 C. C. A. 290; Kentucky v. Hamilton [C. C. A. 6] 63 Fed. 93, 97, 11 C. C. A. 42; International Co. v. Stadler [C. C. A. 6] 212 Fed. 378, 382, 129 C. C. A. 54); otherwise, the intent will be a question of fact.

On behalf of plaintiff, it is said that the boundaries can be made to follow the ridges to Eagle Gap without any greater variations from stated courses and distances, shape of plat or acreage, than was very common at that time in that locality; that the naming of the two ridges shows that it could not have been intended to leave the ridges before the second one was reached at all; that the sixth course, and the resulting curious form of that part of the plat figure, can be explained

upon plaintiff's theory, but are otherwise unintelligible; that Stamper intended to take in all of this Turkey creek watershed, and supposed he had; that he conveyed various portions by deeds, using the summit of the ridge as a southern boundary, and that his grantees occupied thereunder; that it was generally understood in the community that this was his land, and that such understanding (at least as to most of the land) was never disputed until 1903, when some one made the locations under which defendant mainly claims; and so on. Defendant either disputes these claims or, to destroy their force, offers something else in explanation or rebuttal. Without balancing the force of these things, or deciding which ones are or are not legally pertinent, we think they leave the ultimate fact not clear enough to be decided by the court, as matter of law; they make an issue peculiarly appropriate for decision by a local jury.

In addition to these considerations, most, if not all, of which were urged in the former case, but in the different light caused by the different theory then under discussion, the present case presents some entirely new testimony which is claimed to show that the third, fourth, and fifth courses, as well as the first two, were actually marked on the ground, and are evidenced even yet by a certain line of blazed trees running the summit of the ridge, all the way to Eagle Gap. Defendant meets this by claiming that, so far as such blazed trees exist, they were marked at a much later period and in connection with the making of other surveys. It is, of course, conceded that if, in fact, this line was so run and marked by or under direction of the surveyor and at the time of the survey, plaintiff is right in its theory. The evidence offered for plaintiff on this issue is by no means absolutely convincing. If we were trying the fact, we might or might not think it at all persuasive; about that, we express no opinion; we are satisfied that it so far tended to establish plaintiff's claim that the court could not withdraw that issue from the jury; and we think it follows, for both reasons stated, that the issue of what lines the surveyor actually intended to describe as his southern boundary by the language he used should have been submitted to the jury.

[4] The previous decision of this court did not prevent this result. This is for two reasons: First, because the court was then deciding in part an issue of fact, and on the present trial there is additional, pertinent evidence which must be considered; and, second, because the theory of construction now urged by plaintiff was not presented to, or considered by, the court in the former opinion. True, the facts were there which would have raised the theory, if any one had thought of it; but in applying the rule of stare decisis, as distinguished from res judicata, the subsequent court is bound only in these matters of law which the prior court did in fact consider and decide. It is not bound by any implied holdings dependent on legal questions which lurked in the record but were not observed. New v. Oklahoma, 195 U. S. 252, 256, 25 Sup. Ct. 68, 49 L. Ed. 182. What we intend to hold regarding the present effect of the former decision is this: We consider it to decide, as matter of law, that the language of the survey, read in connection with the facts then and now undisputed, did not call for a survey of

11 sides, but for one of 9, and that the ridges were to serve as aids in locating the course and distance calls. To this extent, it is both entitled to be followed under the rule of stare decisis, and its rightfulness is confirmed by the further study the question has now had. So far as it can be thought by implication to have declared, as matter of law, that defendant's theory of construction and application was right, this declaration must be treated like any other ruling or assumption of law, made when the parties were silent regarding what later turns out to be a controlling consideration, and which therefore practically was taken for granted and by tacit consent, and must yield to a later conclusion to be made in a case between other parties and after actual study of the conflicting arguments. So far as it is a conclusion of fact based upon disputable inferences from the evidence, it pertains to what is, in the present case, a question for the jury, and it is immaterial whether we think it rightly decided.

We are not required to say what the situation would be if such an implied holding or declaration of a matter of law had become a rule of property. No title or right acquired on the faith of the former decision is here involved.

It results that the judgment must be reversed, with costs, and the case remanded for a new trial. Some questions of admissibility and force of evidence are presented upon other assignments of error, but they will not arise again under the same surroundings as on the first trial, and they cannot, with advantage, be now considered.

NOTE.

Local or Transitory Actions as Affecting Jurisdiction of Court.

I. In General.

The courts of a state have jurisdiction, by comity, of a right of action given by a statute of another state for a tort committed therein, though at common law no such right of action existed, because the action is transitory.

—(Ind.) Burns v. Grand Rapids & I. R. Co., 113 Ind. 169, 15 N. E. 230;
(Iowa) Morris v. Chicago, R. I. & P. Ry. Co., 65 Iowa, 727, 23 N. W. 143, 54 Am. Rep. 39;
(Minn.) Herrick v. Minneapolis & St. L. Ry. Co., 31 Minn. 11, 16 N. W. 413, 47 Am. Rep. 771;
(Miss.) Chicago, St. L. & N. O. R. Co. v. Doyle, 60 Miss. 977;
(Neb.) Missouri Pac. Ry. Co. v. Lewis, 24 Neb. 848, 40 N. W. 401, 2 L. R. A. 67;
(N. Y.) Leonard v. Columbia Steam Nav. Co., 84 N. Y. 48, 38 Am. Rep. 491;
(Pa.) Knight v. West Jersey R. Co., 108 Pa. 250, 56 Am. Rep. 200.

Actions on contracts, and for personal injuries, and for injuries to personal property, are generally transitory, and follow the person or forum of the defendant.

—(N. Y.) Glen v. Hodges, 9 Johns. 67; Gardner v. Thomas, 14 Johns. 134;
(Va.) Shaver v. White, 6 Munf. 112.

(U. S.) A private corporation, like a natural person, may be sued in a transitory action in any state where service can legally be had upon it; and under Code Civ. Proc. Cal. § 411, which provides for service upon foreign corporations doing business in the state, and section 395, which provides generally for the trial of suits against nonresidents, in any county which the plaintiff may designate in his complaint, a foreign railroad company which does

business in the state, and has a managing agent therein, on whom service may legally be made, is subject to be sued in the courts of the state for a tort committed in another state.—Denver & R. G. R. Co. v. Roller, 100 Fed. 738, 41 C. C. A. 22, 49 L. R. A. 77.

(U. S.) In determining whether an action is local or transitory, the law of the forum governs.—Potomac Milling & Ice Co. v. Baltimore & O. R. Co., 217 Fed. 665.

(Ala.) Local and transitory actions defined.—Wolff v. McGaugh, 57 South. 754.

(Ark.) Under the rule of comity, the state courts will assume jurisdiction of causes of action transitory in their nature, arising under the statutes of a foreign state where their own states have statutes similar to those of the foreign state under which the actions arose.—St. Louis & S. F. Ry. Co. v. Brown, 62 Ark. 254, 35 S. W. 225.

(Cal.) Where an action is transitory in its nature, a right or liability imposed by the statute of another state or of the United States may in proper cases be asserted and enforced in California, but such an action will be entertained only for the purpose and upon the terms permitted by the lex loci.—Ryan v. North Alaska Salmon Co., 95 Pac. 862.

(Ga.) Though Rev. St. U. S. § 906 (U. S. Comp. St. 1901, p. 677), enacted to carry into effect Const. U. S. art. 4, § 1, requires the courts of the several states to enforce any transitory cause of action created by a statute of a sister state, not opposed to the settled policy of the state where the action is brought, neither the Constitution nor any act of Congress authorizes the Legislature of one state to deny to one having a transitory cause of action originating in that state the right to appeal to the courts of another state.—Tennessee Coal, Iron & R. Co. v. George, 75 S. E. 567, 11 Ga. App. 221.

(Mo.) The test of local or transitory actions is the subject-matter to which the injury is done, not the subject causing the injury. Injuries to persons and personal property are transitory, not local.—Mason v. Warner, 31 Mo. 508.

(Mo.) Where the failure of a railroad company to fence its road in any state is a violation of a duty imposed by law, a party injured by such failure can sue in any jurisdiction, since such action is transitory.—Hurley v. Missouri Pac. Ry. Co., 57 Mo. App. 675.

(Mo.) A statute which creates a right of action may impose the condition that an action thereon shall be brought in the courts of the state, and such a condition does not deprive any one of any right.—Lessenden v. Missouri Pac. Ry. Co., 142 S. W. 332.

(N. J.) A state court may assume the jurisdiction of a transitory action, though the subject-matter occurred in another state and was regulated by its laws.—Hale v. Lawrence, 21 N. J. Law (1 Zab.) 714, 47 Am. Dec. 190; Howe v. Lawrence, Id.

(N. Y.) The defendant shipped nitroglycerin from New York to Los Angeles, Cal., by the plaintiff, a carrier, without notice of the nature of the shipment. The package leaked and was taken by the plaintiff to a warehouse at San Francisco for examination, and, while being opened, exploded, damaging the warehouse and freight stored there. *Held* that, although the damages were in part to real estate in California, an action for their recovery was in its nature personal and transitory, and might be brought wherever the defendant could be found and served.—Barney v. Burstenbinder, 7 Lans. 210.

(N. Y.) The courts of New York are open to all suitors and will enforce transitory rights of action where the liability asserted is recognized by the common law, is contractual in its nature, and is not violative of the state's public policy. Judgment 103 N. Y. Supp. 1129, 118 App. Div. 910, reversed.—Hutchinson v. Ward, 85 N. E. 390, 192 N. Y. 375.

(N. C.) In transitory actions a nonresident may be sued at common law, independent of statute, in any jurisdiction where he may be found.—McDonald v. MacArthur Bros. Co., 69 S. E. 832.

(S. D.) An action for redemption by a junior mortgagee by seeking relief against defendant himself is transitory, while an action for a decree affecting any interest in the property is local.—Froelich v. Swafford, 150 N. W. 476.

(Tenn.) The test of whether an action is local or transitory is whether the injury is done to a subject-matter which, in its nature, could not arise beyond the locality of its situation, in contradistinction to the subject causing the injury.—Mattix v. Swepston, 155 S. W. 928.

(Tex.) Liability in a transitory action may be enforced in the courts of any state obtaining jurisdiction of defendant, irrespective of where the wrongdoer or injured party resided or where the injury was inflicted.—Missouri, K. & T. Ry. Co. of Texas v. Godair Commission Co., 87 S. W. 871.

(Tex.) An action for injury to the person or to personalty is transitory, and the right to sue therefor is not confined to the place where the cause of action arises.—Southern Pac. Co. v. Allen, 106 S. W. 441.

(Tex.) The courts of one state may take jurisdiction of actions for torts based on acts or omissions done or occurring in sister states.—Morgan's L. & T. R. & S. S. Co. v. Street, 122 S. W. 270.

(Wash.) Where an action accruing in another state is transitory, and jurisdiction of the parties can be obtained by service of process, the foreign law, if not contrary to the public policy of the forum or to good morals, and not injurious to the state of the forum or its citizens, will be recognized and enforced in actions ex delicto as well as ex contractu.—Reynolds v. Day, 140 Pac. 681.

(Wis.) In an action against a railway company for killing plaintiff's cow, the complaint in which recites a statute of another state and the facts necessary under it for the recovery of double damages in such cases, and prays judgment for such double damages, the averment setting up such statute, and the averments under it, cannot be rejected as surplusage, and the action treated as a transitory one for single damages, so as to render the action maintainable in Wisconsin.—Bettys v. Milwaukee & St. P. Ry. Co., 37 Wis. 323.

II. Actions on Contracts, Covenants, and Contest of Will.

(Conn.) An action for a debt, not depending on local laws for its creation, is in its nature transitory, and follows the person of the debtor.—Place v. Lyon, Kirby, 404.

(Ill.) The right to contest the validity of a will of land is not local, and such contest is incidental to the property and the parties in the state where the property is situated.—Dibble v. Winter, 93 N. E. 145, 247 Ill. 243.

(Ky.) Where plaintiff sold certain standing timber to defendant, and gave defendant the right to use certain houses on the land for the accommodation of its servants while removing the timber, an action to recover damages for injuries done to the houses by defendant's servants while occupying the same was an action for breach of contract, and transitory, and hence maintainable in Kentucky, though the land lay in Virginia.—Campbell v. W. M. Ritter Lumber Co., 131 S. W. 20, 140 Ky. 312.

(La.) An action brought by a resident of Mississippi in the district court for the parish of Caddo, against a railway company whose agent for the acceptance of service is domiciled in New Orleans, and against another defendant domiciled in Ohio, to annul a contract to which the plaintiff is neither party nor privy, whereby the company has agreed to establish a depot on the land of the other defendant, lying contiguous to that of the plaintiff, in the parish of Red River, in consideration of the grant of a portion of such land for right of way and other purposes, on the ground that the contract is illegal, is a personal action, not in the nature of a proceeding in rem.—West v. Lehmer, 38 South. 969, 115 La. 213.

(La.) The courts of Louisiana have power to decree a contract for sale of lands in Texas as made in fraud of creditors, and to coerce the purchaser to surrender the deed for cancellation, or compel him to reconvey the property, or restrain him from availing himself of the fraudulent title, though they may not have the power to directly annul such conveyance as in fraud of creditors.—Kinder v. Scharff, 51 South. 654, 125 La. 594.

(Mich.) The jurisdiction given circuit courts by the Constitution, over transitory actions on contracts, against nonresidents of the state, cannot be taken away by any legislation limiting the forum of the action to the county in which the plaintiff resides.—Atkins v. Borstler, 9 N. W. 850, 46 Mich. 552.

(N. Y.) The courts of this state have jurisdiction of an action on a bail bond given in an action in a sister state, where the defendants are residents of such other state, as such an action is transitory in its nature.—Otis v. Wakeman, 1 Hill, 604.

(N. Y.) On the death of insured the beneficiary may sue in any state where insurer is doing business and where process may be served and of which the beneficiary is a resident. Order, 116 N. Y. Supp. 404, 131 App. Div. 837, affirmed, which affirmed 115 N. Y. Supp. 892, 62 Misc. Rep. 345.—Webster v. Columbian Nat. Life Ins. Co., 89 N. E. 1114, 196 N. Y. 523.

(N. Y.) A life policy is transitory in its nature, and on the death of insured the beneficiary may sue thereon in any state where insurer is doing business and where process may be served and of which the beneficiary is a resident. Order, 115 N. Y. Supp. 892, 62 Misc. Rep. 345, affirmed.—Webster v. Columbian Nat. Life Ins. Co., 116 N. Y. Supp. 404, 131 App. Div. 837.

(N. C.) The action on a covenant of quiet enjoyment is transitory, and, though entered into in another state, may be sued on in this state.—Jackson v. Hanna, 53 N. C. (8 Jones, Law) 188.

(N. C.) An action to set aside notes for fraud, and to enjoin their transfer, is an action in personam, and, unless personal service is acquired, must be brought in the jurisdiction where defendant resides.—Warlick v. H. P. Reynolds & Co., 66 S. E. 657, 151 N. C. 606.

(Okl.) A surety on a guardian's bond executed in Arkansas may, on his removal to Oklahoma, be sued here for breach of the bond.—Hayes v. King, 143 Pac. 1142.

(Tex.) The maker of a note may be sued thereon in the county of his residence, though the note be payable in another state.—Hurd v. Inglehart, 140 S. W. 119.

III. Actions for Personal Injuries.

(U. S.) An action for personal injuries to a servant is transitory, and may be prosecuted in any jurisdiction in which judicial process may be lawfully served on the defendant.—Olson v. Buffalo Hump Min. Co., 130 Fed. 1017.

(Ala.) Where an Alabama corporation operated a sawmill in Florida, it was suable for injuries to a servant in the mill in the Alabama courts.—Watford v. Alabama & Florida Lumber Co., 44 South. 567.

(Ind.) Actions for the recovery of damages for injuries are transitory and arise out of the supposed violation of rights which are neither local nor confined to the state where the right accrued.—Cincinnati, H. & D. R. Co. v. McMullen, 20 N. E. 287, 117 Ind. 439, 10 Am. St. Rep. 67.

(Mass.) An action for damages for personal injuries being transitory, defendant could be sued wherever found.—Cormo v. Boston Bridge Works, 91 N. E. 313, 205 Mass. 366.

(Mich.) An action for injuries to a passenger through the derailment of the train is transitory, and under Const. art. 7, § 10, conferring on the circuit court general jurisdiction, the circuit court has jurisdiction over the subject-matter of the action.—Daniels v. Detroit, G. H. & M. Ry. Co., 128 N. W. 797; Id., 128 N. W. 801.

(Mo.) An action against a railroad company for injuries occurring in another state through negligence may be maintained without proof of the lex loci; it being transitory common-law action.—Burdict v. Missouri Pac. Ry. Co., 123 Mo. 221, 27 S. W. 453, 26 L. R. A. 384, 45 Am. St. Rep. 528.

(N. Y.) Under 2 Rev. St. p. 135, § 1, subd. 1, giving the court of common pleas power to try all local actions arising within its county, and all transitory actions, though not arising there, that court has jurisdiction over an action for personal injury suffered beyond the territorial limits of the state.—Smith v. Bull, 17 Wend. 323.

(Tex.) An action for injuries to a pedestrian while standing between two railroad tracks, which occurred in the territory of New Mexico, where defendant operated its railroad and was a foreign corporation, was transitory in its nature, and was properly brought in Texas in a county in which defendant operated its road.—Atchison, T. & S. F. Ry. Co. v. Keller, 76 S. W. 801, 33 Tex. Civ. App. 358.

(Tex.) The courts of Texas have jurisdiction of an action for injuries to a switchman received in Arizona through the failure of a foreign railroad company to furnish proper automatic couplers, whether based on negligence or on a violation of the federal safety appliance act (Act March 2, 1893, c. 196, 27 Stat. 531 [U. S. Comp. St. 1901, p. 3174]); the laws of Texas and Arizona concurring in holding that such a negligent act is subject to legal redress, and the federal statute being in force throughout the United States. —Southern Pac. Co. v. Allen, 106 S. W. 441.

(Tex.) A citizen of Arizona, injured there through the negligence of a corporation foreign to Texas, was entitled to maintain an action in Texas for the injuries.—Southern Pac. Co. v. Godfrey, 107 S. W. 1135.

(Tex.) At common law an employé may sue for personal injury wherever he may find the wrongdoer.—Atchison, T. & S. F. Ry. Co. v. Mills, 116 S. W. 852.

(Tex.) An action by a husband for loss of services of his wife, due to an injury to her in a railroad wreck, was transitory, so that a court in a state other than that in which the accident occurred had jurisdiction of the subject-matter.—Southern Pac. Co. v. Blake, 128 S. W. 668.

(Wash.) In the absence of statute making a personal injury action local, it is deemed a transitory action and may be brought wherever service can be had upon defendant.—Reynolds v. Day, 140 Pac. 681.

(Wis.) A cause of action against a railroad company by an employé for injuries received is triable in a state other than that in which the accident happens.—MacCarthy v. Whitcomb, 85 N. W. 707, 110 Wis. 113.

IV. Actions for Conversion or Injuries to Personal Property.

(U. S.) An action by the United States to recover the value of timber taken from public lands is transitory, and may be brought in any jurisdiction in which the defendant can be served with process.—Stone v. United States, 17 Sup. Ct. 778, 167 U. S. 178, 42 L. Ed. 127, affirming judgment 64 Fed. 667, 12 C. C. A. 451.

(U. S.) Where the facts stated and the relief demanded show that the gravamen of the action is the conversion of lumber manufactured out of trees wrongfully cut and removed from plaintiff's land by defendant, and that the purpose of the action is to recover the value of the lumber, and not damages for any depreciation in the value of the land, the action is transitory, although the trespass to the land is stated as illustrating the character of the conversion, and as bearing upon plaintiff's right to recover the value of the manufactured lumber.—Peyton v. Desmond, 129 Fed. 1, 63 C. C. A. 651.

(Fla.) A count in a declaration for conversion of cypress trees cut from plaintiff's land in Georgia, and claiming damages for the value of the trees, states a transitory cause of action, of which the Florida courts have jurisdiction; both parties being domiciled in Florida, and process having been served in the state.—Hodges v. Hunter Co., 54 South. 811.

(La.) An action will lie in this state for damages done to the property of plaintiff by a steamer in another state, though, by the laws of the latter, the action would be held to be local. Such an action, under our laws, is a personal action.—Holmes v. Barclay, 4 La. Ann. 63.

(Me.) Trover being a transitory action may be maintained for the conversion of personal property in a foreign jurisdiction.—Whidden v. Seelye, 40 Me. 247, 63 Am. Dec. 661.

(Mo.) An action for an injury to the plaintiff's steamboat while navigating the Mississippi river, beyond the waters of this state, caused by obstructions

wrongfully placed by defendant in the bed of the river, is transitory in its character, and the courts of this state have jurisdiction of the subject-matter. —Mason v. Warner, 31 Mo. 508.

(N. J.) An action for conversion of goods fraudulently purchased being transitory, a court of one state will not refuse to take jurisdiction because the transaction was in another state, of which the defendant is a resident on the ground of public policy.—Kryn v. Kahn, 54 Atl. 870.

(S. C.) An action for unlawfully detaining the personal property of a bailor is transitory, and may be brought in another state than that in which the detention occurred.—Lipscomb v. Tanner, 31 S. C. 49, 9 S. E. 733.

(Tenn.) Where the owners of land situated in Georgia sued for damages to their timber and crops, resulting from smoke and noxious gases generated at smelting works located in Tennessee, the actions were personal, not local, involving no assertion of title or interest in land, and hence could be maintained in the courts of Tennessee.—Ducktown Sulphur, Copper & Iron Co. v. Barnes, 60 S. W. 593.

(Tex.) An action to recover for personal property is transitory, and a district court has jurisdiction of the case even where the case arose in another state, and the parties are citizens of other states.—Southern Pac. Co. v. Graham, 12 Tex. Civ. App. 565, 34 S. W. 135.

(Tex.) An action against a railway company for negligently killing stock on its track is not local, but transitory.—Porter v. El Paso Southwestern Ry. Co., 107 S. W. 927.

(Tex.) A petition in an action by a resident against a foreign banking corporation for the conversion of money deposited with it pursuant to a contract for the purchase of real estate located in the foreign country, to be held by the bank for delivery to the vendor on specified conditions, which alleges the deposit and the contract of purchase and that the bank misappropriated the money by paying it over wrongfully, states a transitory cause of action, and a court of Texas which acquired jurisdiction over the foreign corporation by its appearance and filing answer, had jurisdiction also over the subject-matter. —Banco Minero v. Ross & Masterson, 138 S. W. 224.

(Wis.) An action for conversion will lie in Wisconsin against a defendant who has cut timber on the plaintiff's land in another state, and converted the timber to his own use; but an action of trespass will not lie.—Tyson v. McGuineas, 25 Wis. 656.

V. Actions for Trespass or Injuries to Real Property.

Where injury is done to land, an action for damages must be brought in the courts of the state where the land is situated.

—(Ala.) Howard v. Ingersoll, 23 Ala. 673;

(N. Y.) Watts v. Kinney, 6 Hill, 82; Hurd v. Miller, 2 Hilt. 540; De Courcy v. Stewart, 20 Hun, 561; Dodge v. Colby, 37 Hun, 515.

(U. S.) When an action in the Circuit Court to recover the possession of land situated in another district is joined with an action for rents, issues and profits of the land, that part of the judgment rendered for the value of the rents is within the jurisdiction of the court, and is valid.—Healey v. Humphrey, 81 Fed. 990, 27 C. C. A. 39.

(U. S.) In Minnesota an action to recover pecuniary damages for trespass to real estate in another state is viewed, not as relating to the real estate, but only as affording a personal remedy, and transitory.—Peyton v. Desmond, 129 Fed. 1, 63 C. C. A. 651.

(U. S.) Whether an action to recover pecuniary damages for trespass to real estate is real and local, or is personal and transitory, is essentially a matter of state policy or local law, and must be determined by the view taken of the nature of the action in the state in which it is brought.—Peyton v. Desmond, 129 Fed. 1, 63 C. C. A. 651.

(Ala.) An action for damages for overflowing a mill is local, and must be instituted in a court of the state in which the property is situated.—Howard v. Ingersoll, 17 Ala. 780.

(Ill.) An action for flooding lands is in its nature local, and must be brought within the jurisdiction where the lands lie.—Eachus v. Illinois & M. Canal, 17 Ill. (7 Peck) 534.

(Kan.) Where a mere trespasser entered on land in Missouri, and removed sand therefrom to Kansas, where he converted it to his own use, the owner of the land could maintain an action in Kansas for the value of the sand, as such an action is transitory.—McGonigle v. Atchison, 33 Kan. 726, 7 Pac. 550.

(Kan.) In an action for removing sand in the state of Missouri, and transporting it to this state, and here converting the same, plaintiff is entitled to recover in this state, though the facts alleged are sufficient to constitute a cause of action not only in the nature of trespass de bonis asportatis and trover, but also in the nature of trespass q. c. f.—McGonigle v. Atchison, 33 Kan. 726, 7 Pac. 550.

(La.) An action will lie for damages to the property of plaintiff by a steamer in another state, though, by the laws of that state, the action would be held to be local.—Holmes v. Barclay, 4 La. Ann. 63.

(Mass.) By the common law, an action for a trespass or nuisance to real estate is local.—Sumner v. Finegan, 15 Mass. 280.

(Mich.) Though the action of trespass for the injury to the freehold in cutting and carrying away timber is local, yet trover for the conversion of timber cut and carried away is transitory.—Greeley v. Stilson, 27 Mich. 153.

(Minn.) Since the statute requiring actions for injuries to real estate to be brought in the county where the subject of the action is situated applies only to causes of action arising in the state, an action will lie in Minnesota to recover damages for injuries to land situated in another state.—Little v. Chicago, St. P., M. & O. Ry. Co., 67 N. W. 846.

(N. J.) The court in New Jersey, under the rules of the common law, has no jurisdiction over an action for damages caused by a trespass to land outside of New Jersey.—Hill v. Nelson, 57 Atl. 411, 70 N. J. Law, 376.

(N. Y.) An action will not lie for an injury done by the diversion of a water course, where the premises injured are situated in another state.—Watts v. Kinney, 23 Wend. 484.

(N. Y.) A cause of action for damages for injuries to real property by the negligence of the defendant, is necessarily local, and the courts of New York have not jurisdiction of such an action relating to real property without the state.—Mott v. Coddington, 1 Abb. Prac. (N. S.) 290.

(N. Y.) The New York superior court has no jurisdiction of an action brought against a railroad company, organized within the state, for negligently damaging trees and plants growing on lands in New Jersey.—Huenermund v. Erie Ry. Co., 48 How. Prac. 55.

(N. Y.) An action for damages to real property in another state cannot be maintained in the courts of New York.—Cragin v. Quitman, 22 Hun, 101.

(N. Y.) An action of trespass quare clausum fregit, being local in its character, will not lie in the state, where the land is situated in another state.—American Union Tel. Co. v. Middleton, 80 N. Y. 408.

(N. Y.) In an action brought in New York, the complaint alleged that plaintiff leased to defendant all the coal in certain land in Pennsylvania that would prove merchantable, which defendant was to mine and pay for at a certain rate per ton, and that defendant so negligently and carelessly mined the coal that it had not been able to continue the mining under the agreement, in consequence whereof plaintiff had lost the income she might otherwise have received, and was greatly delayed in receiving royalties. *Held*, that the complaint was for the recovery for injuries to land in another state, and that the court had no jurisdiction of the action.—Genet v. Delaware & H. Canal Co., 56 Hun, 640, 8 N. Y. Supp. 822.

(N. Y.) An action of trespass quare clausum fregit cannot be maintained in one state in reference to lands situated in another.—Sprague Nat. Bank v. Erie R. Co., 57 N. Y. Supp. 844, 40 App. Div. 69.

(N. Y.) An action for damages to real property outside of the state, where the gravamen of the action is negligence, is a personal action and follows the party aggrieved.—Brisbane v. Pennsylvania R. Co., 125 N. Y. Supp. 1042, 141 App. Div. 366, questions certified to Court of Appeals 126 N. Y. Supp. 1122.

(Tex.) A state court has no jurisdiction of an action by one nonresident against another for trespass on land outside the state, since such an action is local.—Morris v. Missouri Pac. Ry. Co., 78 Tex. 17, 14 S. W. 228, 22 Am. St. Rep. 17, 9 L. R. A. 349.

(Vt.) Trespass qu. cl. fr. will not lie in one state for a trespass committed in another state.—Niles v. Howe, 57 Vt. 388.

(W. Va.) A suit to remove a cloud and to quiet title is local in nature, and the jurisdiction of the court is determined by the situs of the land.—Tennant's Heirs v. Fretts, 68 S. E. 387.

(Wis.) An action for injuries to real estate is a local action, and is not maintainable in a state other than that where the lands are situated.—Bettys v. Milwaukee & St. P. Ry. Co., 37 Wis. 323.

(217 Fed. 51)

JAMES v. CLEMENTS et al. (No. 2544.)

(Circuit Court of Appeals, Fifth Circuit. October 5, 1914.)

COURTS (§ 356*)—FEDERAL COURTS—REHEARING—DEATH OF JUDGE AFTER SUBMISSION OF CAUSE.

On the death of one of the judges of the Circuit Court of Appeals, after a cause has been argued and submitted, where the remaining judges are not fully agreed on the case, a rehearing will be granted that it may be submitted before a full bench.

[Ed. Note.—For other cases, see Courts, Cent. Dig. § 937; Dec. Dig. § 356.*]

On petition for rehearing. Granted.

For former opinion, see 211 Fed. 972, 128 C. C. A. 470.

Before PARDEE, Circuit Judge, and FOSTER, District Judge.

PER CURIAM. In the opinion and decision heretofore rendered in this case (211 Fed. 972, 128 C. C. A. 470), a majority of the judges held that the bill of exceptions found in the record was not sufficiently well taken to bring all the evidence properly before the court for consideration, and thereupon affirmed the judgment of the lower court without passing upon certain assignments of error to the rulings of the trial judge, refusing instructions to the jury affecting the merits of the case. On the application for rehearing and on consideration we concluded that our ruling rejecting the bill of exceptions was erroneous, and that we should re-examine and consider the case, giving full effect to said bill of exceptions, and thereon render the proper judgment without further briefs or argument.

Before reaching a final conclusion the death of Judge Shelby, who constituted a part of the court in the case, supervened, leaving only two judges to determine the matter, and they not fully concurring on certain points necessarily arising under the assignments of error.

Under these circumstances and that justice may be done, we feel compelled to grant the rehearing asked and order the case restored to the docket for reassignment and submission before a full bench.

And it is so ordered.

(217 Fed. 177)

MOORE et al. v. DONAHOO et al.

(Circuit Court of Appeals, Ninth Circuit. September 14, 1914. On Petition for Rehearing, November 17, 1914.)

No. 2353.

1. RECEIVERS (§ 158*) — PRIORITY OF LIENS AND MORTGAGES — DEBTS FOR OPERATING EXPENSES.

In the distribution of the assets of an insolvent railroad company, preference will not be given to debts for necessary operating expenses incurred before the receivership, over prior mortgages, from the corpus of the property, unless it is necessary to enable the receiver to continue operation of the road.

[Ed. Note.—For other cases, see Receivers, Cent. Dig. §§ 301-306; Dec. Dig. § 156.*]

2. RECEIVERS (§ 158*)—PRIORITY OF LIENS AND MORTGAGES—DEBTS FOR OPERATING EXPENSES.

The right of persons furnishing labor or supplies necessary to the operation of a railroad to preference over a prior mortgage debt in case of insolvency, where such equity exists, is not dependent on the institution of the proceedings by the mortgagee, or the fact that the receiver was appointed at its instance, and that it thereby invoked the equitable powers of the court; but such right is one which the court may be called upon to affirmatively enforce.

[Ed. Note.—For other cases, see Receivers, Cent. Dig. §§ 301-306; Dec. Dig. § 158.*]

3. RECEIVERS (§ 158*)—PREFERENCE OF DEBTS FOR OPERATING EXPENSES—DIVERSION OF INCOME.

Where there has been a diversion of income by a railroad company for the benefit of a mortgagee within the preferential period before a receivership, which should have been applied to the payment of current operating expenses, persons who furnished necessary labor or supplies during that time are entitled to have such income restored from the corpus of the property and applied to their claims, without reference to whether such claims became due before or after the diversion.

[Ed. Note.—For other cases, see Receivers, Cent. Dig. §§ 301-306; Dec. Dig. § 158.*]

On Petition for Rehearing.

4. RAILROADS (§ 194*) — SALE IN FORECLOSURE PROCEEDINGS — LIABILITY OF PURCHASER FOR INTEREST.

Where the property of an insolvent railroad company was sold under an order of court, subject to the payment by the purchaser, in addition to the sum bid, of such claims for operating and maintenance expenses incurred by the company prior to the receivership as the court should ultimately find entitled to priority over the mortgage debt, not exceeding a stated amount, the purchaser is liable for interest on the claims so awarded priority from the date of his purchase; the amount being in effect a part of the purchase price.

[Ed. Note.—For other cases, see Railroads, Cent. Dig. §§ 643-655; Dec. Dig. § 194.*]

Appeal from the District Court of the United States for the Northern District of California; William C. Van Fleet, Judge.

Suit in equity by the Baldwin Locomotive Works against the Ocean Shore Railway Company and others. From a decree awarding preference to claims of F. L. Donahoo and others, Charles C. Moore, F. W.

*For other cases see same topic & § NUMBER in Dec. & Am. Digs. 1907 to date, & Rep'r Indexes

Bradley, Maurice Schweitser, R. D. Robbins, and Walter S. Martin, interveners, appeal. Modified.

Edward J. McCutchen, Gavin McNab, and A. Crawford Greene, all of San Francisco, Cal. (McCutchen, Olney & Willard, of San Francisco, Cal., of counsel), for appellants.

Goodfellow, Eells & Orrick, of San Francisco, Cal., for certain claimants.

Sullivan & Sullivan, Theo. J. Roche, and Goodfellow, Eells & Orrick, all of San Francisco, Cal., for certain labor claimants.

Charles S. Cushing and Wm. S. McKnight, both of San Francisco, Cal., for Remington Typewriter Co.

Frank M. Hultman, of San Francisco, Cal., for August Johnson.

Maurice R. Carey, of San Francisco, Cal., for R. P. Standley et al.

Daniel H. Knox, of San Francisco, Cal., for Knox and another.

A. F. Morrison, Peter F. Dunne, and W. I. Brobeck, all of San Francisco, Cal., for Mercantile Trust Co., of San Francisco.

Before GILBERT and ROSS, Circuit Judges, and DIETRICH, District Judge.

DIETRICH, District Judge. The appellants represent the interests of the mortgagee, and the respondents are the unsecured creditors, of an insolvent railroad company. The general question involved is when and to what extent the claims of those who in the ordinary course of business furnish labor and supplies for the maintenance and operation of a railroad will, in the distribution of its assets by a court of equity, be preferred to bonds secured by a pre-existing mortgage.

The facts are presented in the form of an agreed statement, accompanied by the decree of the lower court, as provided by general equity rule 77 (198 Fed. xli, 115 C. C. A. xli). It is thereby shown that the Ocean Shore Railway Company was the owner of two short lines of railroad near the city of San Francisco, Cal., and on November 1, 1905, it executed a trust deed to the Mercantile Trust Company of San Francisco to secure the payment of an issue of bonds aggregating $5,000,000, the deed covering all of its property, including future acquisitions and income. Substantially all of the bonds were sold and became the valid obligations of the mortgagor. No interest having been paid on account of the installments falling due upon November 1, 1909, and May 1, 1910, the trustee, acting in pursuance of the authority conferred upon it by the provisions of the mortgage or trust deed, declared the entire principal due, and upon June 7, 1910, caused notice to be published of its intention to sell the property for the purpose of paying the indebtedness. The sale was originally set for September 1, 1910, but was postponed to October 1, 1910, and, under circumstances to be explained, was finally consummated on January 17, 1911.

In the meantime, on December 6, 1909, the Baldwin Locomotive Works, an unsecured creditor, filed a bill against the railway company as the sole defendant, in the United States District Court for the Northern District of California, in behalf of itself and of other creditors. It was shown by the bill that the defendant was indebted upon

unsecured claims aggregating approximately $2,000,000, that it was insolvent, and that there was danger of its property becoming dissipated or impaired in value by the prosecution of numerous suits and the levy of attachments and executions. There was a prayer for the appointment of a receiver and for an order directing him to pay the claims of plaintiff and others out of the net operating revenues of the property. Upon the same day the railway company appeared, and by answer admitted the allegations of the bill and joined in the prayer for a receiver. One F. S. Stratton was thereupon appointed receiver, who at once took possession of the property and continued to operate it until February 1, 1911. On May 21, 1910, by supplemental bill, the Mercantile Trust Company was made a party defendant, together with numerous creditors who had intervened.

On July 22, 1910, upon the representation of the receiver that he could not operate the property without loss, the court entered an order, directed against all parties to the suit, including the trustee, requiring them to show cause why a sale should not be made by the receiver. In response thereto, the trust company, appearing "specially," asked that the order to show cause be discharged, and also filed a cross-bill setting forth its interest and praying that it be permitted to proceed with the sale without interference from the receiver. Hearings were had, and the court, having assumed jurisdiction to supervise and control the sale, entered an order authorizing the trust company to sell the property, under certain prescribed conditions, one of which was that out of the proceeds a specified sum should be turned over to the receiver for the payment of the expenses of the receivership and for other purposes, and another that the sale and transfer should be made subject to the payment of certain operating and maintenance claims against the railway company incurred before the appointment of the receiver, not exceeding in the aggregate $100,000, provided the court should ultimately hold that they were entitled to priority of payment over the bonds. The claims so referred to were those which the respondents now hold, but the character and amount of which had not at that time been judicially ascertained.

The sale was made in compliance with the terms of this order, and the appellants, who became the purchasers thereat, took the title subject to the conditions prescribed. It thus appears that the sale was made under the power of the trust deed, with the permission and subject to the conditions imposed by the court. In due time the trustee made return of its proceedings, and prayed for an order confirming the sale and directing the receiver to join with it in the execution of proper instruments of conveyance. Such an order was made, and conveyances were executed accordingly. Thereupon the purchasers sought and procured permission to intervene.

The question whether or not the respondents' claims should be paid in preference to the bonds was referred to a master. The master found (and the correctness of the finding is not questioned) that the claims which accrued during the period of six months immediately preceding the appointment of the receiver—that is, from June 1, 1909, to December 6, 1909—on account of labor done and materials furnished in the ordinary course of business, for the normal maintenance and opera-

tion of the railroad, and which it was reasonable to expect would be paid out of the current operating income, aggregated $48,571.42. It is agreed that the labor and supplies for which this indebtedness was incurred were in each instance necessary to the business of the railway company as a carrier of freight and passengers, and to the public service, and were necessary for the maintenance of the railroad, and to keep it a going concern. There was no current income on hand at the time the receiver was appointed, and the operation by the receiver was at a loss. Of the operating income accruing from June 1, 1909, to December 6, 1909, there was applied to the payment of expenses of construction and other obligations having no relation to the operation or maintenance of the road the aggregate sum of $30,000. There was no evidence as to the exact time when the diversion of any specific part of this sum was made.

The master held that all of the claims were preferential in character, but, adopting the "income" theory, limited the preference to the amount of the diverted income, and hence recommended a pro rata distribution of the $30,000 to the several respondents. While confirming the master's report in other respects, the court below took the view that, inasmuch as the indebtedness due the respondents was necessarily incurred in keeping the railroad a "going concern," the question of diversion was not controlling, and entered a decree adjudging the entire amount of $48,571.42 to be a first lien upon the property, and required the purchasers to pay the same, together with interest. The appeal is from this decree.

Conceding that under certain circumstances and within certain limitations the claim of a general creditor of an insolvent railroad corporation may be preferred to a pre-existing mortgage lien, appellants contend that the decree should be reversed or modified for the following reasons:

(1) The preference of the respondents, if any they have, is limited to the amount of income diverted, namely, $30,000.

(2) No one of the respondents is entitled to priority, because the trustee did not commence an action of foreclosure or secure the appointment of the receiver, or, as is claimed, submit itself to the operation of the rule that he who seeks equity must do equity.

(3) There is no proof that any current income was diverted during the six months period after the indebtedness of any one of the respondents had become payable.

[1] 1. As already intimated, the general question involved in the first proposition is whether we shall give place to what is known as the "net income" theory, or to the "going concern" theory, as the basis for preferential allowances. Are claims, such as those of the respondents are conceded to be, for current supplies and services which are necessary to the maintenance of the property of a public service corporation, and to keep it in operation, to be paid out of the current income in preference to the bonds, upon the assumption that the lien of the mortgage attaches only to the residue of the income remaining after the payment of the operating expenses, or may they displace the vested lien of the mortgage upon the corpus of the estate, because the claimants by their labor and supplies rendered necessary assistance in continuing the oper-

ation of the property, thus enabling the debtor to discharge its obligations to the public?

In the court below, as we have seen, the latter view prevailed. The point urged by the appellants is, not that an incorrect application of the principle was made, but that the principle itself is inherently incorrect. The question has been the subject of frequent consideration in the federal courts, but the decisions are in hopeless conflict. Different rules have prevailed in the several circuits, and in some instances there has been an apparent lack of uniformity in the same circuit. Entertaining, as we do, the opinion that the point is conclusively ruled by Gregg v. Metropolitan Trust Co., 197 U. S. 183, 25 Sup. Ct. 415, 49 L. Ed. 717, we do not deem it necessary to review or attempt to classify the numerous decisions cited in the briefs. This case was brought against the Columbus, Sandusky & Hocking Railroad Company for foreclosure of two mortgages, and a receiver was appointed. Within the six months period prior to the receivership, Gregg, in pursuance of the terms of a contract with the railroad company, furnished cross-ties for the replacing of ties decayed in the current operation of the road. A large proportion of the ties were on hand when the receiver was appointed, and used by him in maintaining the roadway. The circumstances indicated that payment would be made out of the current income. Furthermore, it was stipulated that the claim was for "necessary operating expenses in keeping and using said railroad and preserving said property in a fit and safe condition."

"The case stands," such is the language of Mr. Justice Holmes, speaking for the court, "as one in which there has been no diversion of income by which the mortgagees have profited, or otherwise, and the main question is the general one, whether in such a case a claim for necessary supplies furnished within six months before the receiver was appointed should be charged on the corpus of the fund. There are no special circumstances affecting the claim as a whole, and if it is charged on the corpus it can only be by laying down a general rule that such claims for supplies are entitled to precedence over a lien expressly created by a mortgage recorded before the contracts for supplies were made. An impression that such a general rule was to be deduced from the decisions of this court led to an evidently unwilling application of it in New England R. Co. v. Carnegie Steel Co., 75 Fed. 54, 58 [21 C. C. A. 219], and perhaps in other cases. But we are of opinion, for reasons that need no further statement (Kneeland v. American Loan & Trust Co., 136 U. S. 89, 97 [10 Sup. Ct. 950, 34 L. Ed. 379]), that the general rule is the other way, and has been recognized as being the other way by this court."

If by this language any doubt were possible of the intention of the court to disapprove of the "going concern" theory, the dissenting opinion most clearly indicates that it was this precise question upon which there was a division.

It is pointed out by respondents that their labor and supplies "were necessary to the business" of the road, while in the Gregg Case, after referring to certain allowances sanctioned in Miltenberger v. Logansport, etc., Railway Co., 106 U. S. 286, 1 Sup. Ct. 140, 27 L. Ed. 117, the following language is used:

"The ground of such allowance as was made was not merely that the supplies were necessary for the preservation of the road, but that the payment was necessary to the business of the road—a very different proposition."

Attention is also directed to that part of the opinion where it is observed that:

"The payment of the employés of the road is more certain to be necessary in order to keep it running than the payment of any other class of previously incurred debts."

And to the further statement that:

"We already have intimated that the payment of railroad hands might stand on stronger grounds than the payment for past supplies, etc."

But plainly all of these expressions have reference to the principle underlying an exceptional class of preferences considered in the Miltenberger Case. In brief, this principle is that a receiver may sometimes be authorized to pay past debts and charge the same against the corpus of the fund, where failure to make such payment would result in injury to, or would make it difficult to carry on the business of, the estate. If, for illustration, upon the appointment of a receiver, he finds that the pay of the enginemen of the railroad is in arrears, and that they are unwilling to render further service unless their claims are paid, the receiver may very readily conclude, especially where other skilled men are unavailable, that payment is necessary to the business of the road, and disbursements so made may be held to constitute a prior lien, upon the theory that they are required for the preservation of the value of the estate. So in the case where there is only one available source of fuel supply, and the owner declines to furnish the receiver with fuel until past bills are paid, a similar course may be taken for like reasons.

"It is easy to see," said the court in the Miltenberger Case, "that the payment of unpaid debts for operating expenses, accrued within 90 days, due by a railroad company suddenly deprived of the control of its property, due to operatives in its employ, whose cessation from work simultaneously is to be deprecated, in the interests both of the property and the public, and the payment of limited amounts due to other and connecting lines of road for materials and repairs and for unpaid ticket and freight balances, the outcome of indispensable business relations, where a stoppage of the continuance of such business relations would be a probable result, in case of nonpayment, the general consequence involving largely, also, the interests and accommodation of travel and traffic, may well place such payments in the category of payments to preserve the mortgaged property in a large sense, by maintaining the good will and integrity of the enterprise, and entitled them to be made a first lien."

In such cases the nature or character of the debts which the receiver is called upon to pay is comparatively unimportant; the controlling consideration is the present necessity of the receiver. If the exigency is such that he must pay past debts before he can procure indispensable future supplies, he must, in deference to his paramount duty to preserve the value of the estate, yield to the necessity, provided, of course, that the probable loss would exceed the required payments. It is to be noted that in the language above quoted from the Gregg Case a distinction is not drawn between supplies necessary for the *preservation* of the road and supplies necessary to the *business* of the road; it is difficult to see how, upon principle, such a distinction could be made. The ground of the allowance, says the court, was not merely "that the supplies were necessary," but that "the payment [therefor] was necessary."

The distinction is between the necessity of past supplies and the necessity of present payment therefor. Accordingly it was further said in the Gregg Case that:

"The payment of employés of the road is more certain to be necessary in order to keep it running than the payment of any other class of previously incurred debts."

Not that a different principle applies to labor claims, but that they are more likely to fall within the principle. In any case it is a question of business necessity, and such necessity is more likely to arise in the case of skilled labor than in the case of general supplies, which, if they cannot be procured from one source, may be gotten from another.

In the case at bar the receiver recognized this rule of necessity in the payment of a limited number of claims for rentals which are not here in controversy. But very clearly it was not made, and under the facts of the case it could not properly be made, the basis of the allowance of respondents' claims. So far as appears, the receiver never concluded that, as a matter of business policy, it was necessary to pay these claims, and no order was ever made directing or authorizing him to pay the same. There are no facts in the record from which it can be intelligently inferred that any one of the claimants continued to perform labor for or to furnish supplies to the receiver upon the condition or assumption that his claim would be paid. Indeed, there is no evidence that any one of the respondents was furnishing supplies or performing labor at the time the receiver was appointed, or thereafter furnished any supplies or performed any labor.

[2] 2. In response to the second proposition the reply may be made that, while the receiver was not appointed upon the application of the trustee, it did seek the aid of the court. True, it was formally empowered to enforce its security by notice and sale; but, without a decree adjudicating the rights of the numerous claimants, apparently no one would have purchased the property at such sale. This it practically conceded in the course of the hearings, and accordingly it filed a cross-bill, sought and procured judicial sanction for a sale, and upon its motion the sale was confirmed, and the receiver directed to join with it in executing conveyances to the property.

But, aside from these considerations, we are unable to yield to the view that claims of the character of those here involved can be preferred only in cases where the trustee institutes a foreclosure suit and applies for the appointment of a receiver. The principle of preference rests upon a more substantial basis than the power of the courts to deny an application for the appointment of a receiver in case the applicant is unwilling to submit to what the court may conceive to be equitable conditions. In the statement sometimes made that the court may, in the exercise of its discretion, deny relief to the mortgagee unless it is willing to recognize the equities of the unsecured creditor, there is clearly implied a pre-existing equity in the latter. As was pointed out in Kneeland v. American Loan & T. Co., 136 U. S. 89, 10 Sup. Ct. 950, 34 L. Ed. 379, the discretion is not to be exercised arbitrarily, but with due regard to contractual rights. And surely no equity as against a mortgagee or in favor of a general creditor arises

from the mere fact that the mortgagee may be under the necessity of invoking the aid of the courts to enforce his lien. The mortgagee's lien is such as by fair implication he has contracted for, and he cannot justly be required to barter a measure of his rights for a measure of the relief which it is the duty of the courts freely to accord to any one standing in need thereof. So with the unsecured claimant: Such equity as he may have flows from the fact that, in the ordinary course of business, he has performed labor or furnished necessary supplies to the railroad company with the reasonable expectation of being paid therefor from certain funds. His power to enforce his rights should not be made contingent upon the possibility that the secured creditor may apply to a court for the appointment of a receiver or for other equitable relief, a circumstance wholly fortuitous, or at least one over which he exercises no control.

The real basis upon which the preference rests is thought to be the implied understanding on the part of all parties that such debts are to be paid out of the current income before the mortgagee has any claim thereto. Reference to a few of the decisions of the Supreme Court will be sufficient to make this clear. In the leading case of Fosdick v. Schall, 99 U. S. 235, 25 L. Ed. 339, the court, speaking through Mr. Justice Waite, said:

> "The income out of which the mortgagee is to be paid is the net income obtained by deducting from the gross earnings what is required for necessary operating and managing expenses, proper equipment, and useful improvements. Every railroad mortgagee in accepting his security impliedly agrees that the current debts made in the ordinary course of business shall be paid from the current receipts before he has any claim upon the income. If for the convenience of the moment something is taken from what may not improperly be called the current debt fund, and put into that which belongs to the mortgage creditors, it certainly is not inequitable for the court, when asked by the mortgagees to take possession of the future income and hold it for their benefit, to require as a condition of such an order that what is due from the earnings to the current debt shall be paid by the court from the future current receipts before anything derived from that source goes to the mortgagees. In this way the court will only do what, if a receiver should not be appointed, the company ought itself to do."

It is further said that:

> It is within the power of the court to use the income of the receivership to discharge obligations which, but for the diversion of funds, would have been paid in the ordinary course of business. This, not because the creditors to whom such debts are due have in law a lien upon the mortgage property or the income, but because in a sense the officers of the company are trustees of the earnings for the benefit of the different classes of creditors and the stockholders; and if they give to one class of creditors that which properly belongs to another, the court may, upon an adjustment of the accounts, so use the income which comes into its own hands as, if practicable, to restore the parties to their original equitable rights."

It is also said that sometimes the court can require restoration of the diverted income from the corpus of the fund, the power so to do resting "upon the fact that in the administration of the affairs of the company the mortgage creditors have got possession of that which in equity belonged to the whole or a part of the general creditors."

In Burnham v. Bowen, 111 U. S. 776, 780, 783, 4 Sup. Ct. 675, 677, 679 (28 L. Ed. 596), it was said:

"The business of every railroad company is necessarily done more or less on credit, all parties understanding that current expenses are to be paid out of current earnings."

And again:

"If current earnings are used for the benefit of mortgage creditors before current expenses are paid, the mortgage security is chargeable in equity with the restoration of the fund which has been thus improperly applied to their use."

To the same effect is St. Louis, Alton, etc., Railroad v. Cleveland, Columbus, etc., Railroad, 125 U. S. 658, 673, 8 Sup. Ct. 1011, 31 L. Ed. 832.

In the more recent case of Southern Railway v. Carnegie Steel Co., 176 U. S. 257, 285, 20 Sup. Ct. 347, 358 (44 L. Ed. 458), Mr. Justice Harlan, speaking for the court, said that, while each case must depend upon its own special facts, it could be safely deduced as a conclusion from the former decisions of the court:

"That a railroad mortgagee, when accepting his security, impliedly agrees that the current debts of a railroad company contracted in the ordinary course of its business shall be paid out of the current receipts before he has any claim upon such income."

If, as is thus held, the current income constitutes a trust fund, and if the mortgagee in taking his security impliedly agrees that laborers and materialmen may first be paid out of this fund, before he has any claim thereto, and if one performs labor or supplies material in reliance upon this understanding, it follows as a matter of course that he has a right which a court of equity may assist him to enforce, as well as to defend, and he may, if he so desires, initiate a proceeding for that purpose.

[3] 3. Under the third head appellants contend that a railroad company is under no obligation to provide for future indebtedness by the accumulation of a surplus, and that therefore a general creditor cannot complain of diversions of income prior to the maturity of his claim. The materiality of the contention lies in the fact that the record fails to disclose the relation of the several claims in point of time to the diversions relied upon. It is to be admitted that a measure of support for the general proposition may be found in the following decisions: St. Louis, A. & F. H. R. Co. v. Cleveland R. R. Co., 125 U. S. 658, 8 Sup. Ct. 1011, 31 L. Ed. 832; Central Trust Co. v. E. Tennessee R. Co., 80 Fed. 624, 26 C. C. A. 30; Kansas L. & T. Co. v. Electric Co., 108 Fed. 702; Fordyce v. Omaha, etc., R. Co., 145 Fed. (C. C.) 544, 555.

But here, as is the general rule, the courts must be understood as having spoken with reference to and in the light of the facts they had under consideration, and there is no very close analogy between some of the cases and the one at bar. In the first one cited, it may be pointed out that there was but a single intervention, and that the intervener sought to take advantage of diversions antedating the preferential period. While, as a matter of strict logic, these distinctions may

not be controlling, still it is apparent that the court had no reason to consider, and probably did not consider, the practicability or propriety of applying the rule relied upon to a case like the present one, where the diversions are all within the preferential period, and where the task of marshaling the numerous claims with reference to diversions, and calculating the distributive share to which each is entitled, would be extremely difficult, if not impossible. In the Central Trust Company Case there were but three interveners, and it is not clear that the diversion was within the preferential period. In each of the other cases there was but one intervention, and in at least one of them the diversion relied upon was prior to the six months period. It is also to be noted that the cases are not in harmony touching the date when the diversion period commences to run; two of them adopting the maturity of the creditor's claim, and the other two its creation. The appellants insist upon the former standard; that is, that there can be no diversion as to any creditor until his claim becomes due. In that view, if we suppose that employés upon monthly salaries, payable upon the 10th day of each succeeding month, render services to a corporation during a given month in expectation that they will be paid out of the current income, which they help to create, and upon the 1st day of the following month such income is applied to the payment of claims for betterments, and thereupon the mortgagee commences a suit in foreclosure and procures the appointment of a receiver, it is clear that the employés are left remediless. Again, under such a rule, what relief is available for those who supply materials or perform labor during the month immediately preceding a receivership, in a case where the current revenues for that month are applied to the satisfaction of similar claims accruing during the preceding month, which have remained unpaid because of the diversion of the current revenues for that month to the discharge of interest on bonds? And, generally speaking, it would inevitably result that claims most recently accruing, and therefore most clearly entitled to protection, would least often be in a position to demand a restoration of diverted funds. It is doubtless true in actual practice that credit is extended for current supplies and for labor upon the assumption that there has been no improvident diversion of the current income in the immediate past quite as often as upon the expectation that there will be no such diversion in the immediate future. Whatever standard may be employed in the case of an isolated claim in relation to an isolated diversion, it is thought that, at least in cases where the claims are numerous and the accounts current, the rule contended for would not only be difficult of application, but inequitable as well, and that some period must be adopted as a unit, during which all claims are to be deemed to constitute a single group and have the same footing. We agree with the court below in adopting the preferential period as such unit, and in holding that presumptively the current revenues thereof are applicable to the current debts, and that in case of a diversion restoration may be decreed for the common benefit of the entire group.

Accordingly the cause will be remanded, with directions to modify the decree by limiting its operation to the $30,000 fund, to which is to

be added interest at the rate of 7 per cent. per annum from the date the property was transferred to the appellants. Costs to appellants.

On Petition for Rehearing.

[4] The principal contention made in the petition for rehearing is that the appellants ought not to be compelled to pay interest from the date the property was transferred to them. The propriety of such a requirement appeared to us to be so obvious that discussion of the point was not thought to be necessary in our original opinion. We are not unmindful of the general rule that, where property of an insolvent debtor passes into the hands of a receiver or an assignee in insolvency, interest is not ordinarily allowed to claimants to cover the delay incident to the settlement of the estate; but this rule is not applicable here. The order of sale was made, and the appellants purchased the property, and the transfer thereof was made to them, upon the condition and upon their implied agreement that they were to pay the aggregate of respondent's claims, up to $100,000, as a part of the purchase price. It is therefore not a question of penalizing them for the delay incident to the litigation, but rather a question whether or not they are to profit thereby. When they bought the property, in effect they agreed to pay, as the purchase price therefor, not only the amount which they have already paid, but also this $30,000. They have had the use of the $30,000, and the respondents, to whom it was presently due, have been deprived thereof. It is only fair and equitable that they should pay the value of such use.

Upon other points no new considerations are advanced. Accordingly the petition will be denied.

(217 Fed. 187)

KANSAS CITY PIPE LINE CO. et al. v. FIDELITY TITLE & TRUST CO. et al. (three cases). LANDON et al. v. KANSAS NATURAL GAS CO. et al. SAME v. McPHERSON, District Judge.

(Circuit Court of Appeals, Eighth Circuit. August 20, 1914.)

Nos. 4179, 4195, 4196, 4202, 143.

1. COURTS (§ 489*)—FEDERAL AND STATE COURTS—CONFLICT OF JURISDICTION —RECEIVERS.

The state of Kansas commenced a suit against the Kansas Natural Gas Company, a Delaware corporation doing business in the state, to enforce its anti-trust laws. Pending the suit receivers were appointed by the federal court in a foreclosure suit for all of the property of the company situated in Kansas, Oklahoma, and Missouri, under Judicial Code (Act March 3, 1911, c. 231) § 56, 36 Stat. 1102 (U. S. Comp. St. 1913, § 1038). As the result of the hearing receivers were also afterward appointed by the state court for the property of the company in Kansas, and on their application such property was turned over to them by the federal receivers by order of the court. The Kansas City Pipe Line Company, organized as an auxiliary of the gas company, had leased all of its property, consisting of pipe lines, to the gas company and was a large creditor for rentals. It also had a mortgage on its property, and the gas company had two mortgages securing outstanding bonds, in all aggregating $13,000,000. The pipe line company, and also its mortgagee, were

*For other cases see same topic & § NUMBER in Dec. & Am. Digs. 1907 to date, & Rep'r Indexes

brought into the state suit, and a receiver for the pipe line company appointed therein. The receivers for both companies and the gas company itself applied to the federal court to have all of the property of such company, including money in the hands of the receivers, turned over to its state' receivers, which was opposed only by the pipe line company and its mortgagee. The property of the gas company consisted of gas wells owned and leased in Kansas and Oklahoma and pipe lines extending therefrom through Kansas and into Missouri, and its business was the supplying of gas, for the most part through local companies, for the use of about 40 cities and towns in those two states, from which a large revenue was collected by the federal receivers, and all parties agreed that, in order to conserve the property, all that in the three states must be kept and operated together. *Held*, that the mere pendency of the suit in the state court did not deprive the federal court of jurisdiction to appoint receivers at suit of the mortgagee, but that because of the nature of the suit in the state court its receivers, when appointed, had the better right to possession of the property within the state, and that as all parties in interest, except the pipe line company and its mortgage trustee, desired it, and the necessity for a common control and management of the entire property was apparent, it was within the power of the federal court to turn over possession of all of the property and money in the hands of its receivers to the state receivers, subject to all lawful liens arising by virtue of its own receivership, retaining jurisdiction of the suit until that in the state court was disposed of.

[Ed. Note.—For other cases, see Courts, Cent. Dig. §§ 1324–1330, 1333–1341, 1372–1374; Dec. Dig. § 489.*

Conflict of jurisdiction with state courts, see note to Louisville Trust Co. v. City of Cincinnati, 22 C. C. A. 356.]

2. RECEIVERS (§ 91*)—ADOPTION OF LEASE.

Where an order appointing receivers provided that contracts and leases should not be taken as adopted without the express action of the court, the fact that they continued to use leased property did not bind them as an adoption of the lease, the court not having been asked to adopt or disaffirm it, so as to make the rental called for by the lease an operating expense of the receivership and a lien on the property and its income.

[Ed. Note.—For other cases, see Receivers, Cent. Dig. §§ 167, 168; Dec. Dig. § 91.*]

Appeals from the District Court of the United States for the District of Kansas; Smith McPherson, Judge.

Suit in equity by the Fidelity Title & Trust Company, trustee, and John L. McKinney, against the Kansas Natural Gas Company. From certain orders made by the District Court, the Kansas City Pipe Line Company and the Fidelity Trust Company and also John M. Landon and R. S. Litchfield, as receivers, separately appeal. Petition of John M. Landon and R. S. Litchfield, as receivers, for a writ of mandamus against Hon. Smith McPherson, as assigned Judge of the District Court for the District of Kansas, First Division. Orders appealed from modified and affirmed. Petition for mandamus denied.

See, also, 209 Fed. 300, 126 C. C. A. 226.

J. W. Dana and W. C. Scarritt, both of Kansas City, Mo. (E. L. Scarritt, E. S. North, and A. M. Seddon, all of Kansas City, Mo., on the briefs), for appellants Kansas City Pipe Line Co. and Fidelity Trust Co.

John S. Dawson, Atty. Gen., of Kansas, Chester I. Long, of Wichita, Kan., and John H. Atwood, of Kansas City, Mo. (O. P. Ergenbright

*For other cases see same topic & § NUMBER in Dec. & Am. Digs. 1907 to date, & Rep'r Indexes

and T. S. Salathiel, both of Independence, Kan., on the brief), for appellants Landon and Litchfield.

Charles Blood Smith, of Topeka, Kan. (Samuel Barnum, of Topeka, Kan., on the brief), for appellees Fidelity Title & Trust Co. and McKinney.

Samuel S. Mehard, Cornelius D. Scully, and Churchill B. Mehard, all of Pittsburgh, Pa., filed a brief by leave of court on behalf of the protective committee of holders of second mortgage bonds of the Kansas Natural Gas Co.

Before HOOK and SMITH, Circuit Judges, and AMIDON, District Judge.

HOOK, Circuit Judge. These are appeals from orders of the District Court of the United States for the District of Kansas made in the adjustment of a conflict of jurisdiction between it and a state court. On January 5, 1912, the state of Kansas brought an action against the Kansas Natural Gas Company and others in the district court of Montgomery county in that state to enforce its anti-trust laws. The company is a Delaware corporation, with business headquarters in Montgomery county. The hearing of the action began September 30, 1912, but before its conclusion and on October 7th McKinney, a creditor holding second mortgage bonds, filed a creditor's bill against the company in the court below and caused receivers of its property to be appointed. October 19th the Fidelity Title & Trust Company, trustee in the first mortgage of the defendant company, was made a party plaintiff. Shortly afterwards the trustee filed an independent bill in foreclosure. For convenience these suits will be referred to as the foreclosure suit. By proceeding under section 56 of the Judicial Code jurisdiction was taken by the court below of the company's property in Missouri and Oklahoma. On February 15, 1913, the state court concluded its consideration of the action before it and rendered judgment against the company, appointing receivers of its property in Kansas, directing them in conjunction with the Attorney General to appear in the court below and urge the prior jurisdiction of the state court and the rights of the state of Kansas, making the Kansas City Pipe Line Company a party defendant and restraining it from litigating elsewhere any matter of its contract with the Kansas Natural Gas Company. February 18, 1913, the Attorney General and the state receivers appeared in the court below and applied for possession. It was held, June 5, 1913, they should prevail. 206 Fed. 772. On appeal to this court the order was affirmed. 126 C. C. A. 226, 209 Fed. 300.

The order directed the federal receivers to surrender all the property in Kansas to the state receivers and retained the matter for future directions respecting certain conflicting relations and the moneys on hand from the operation of the business. The mandate of this court was spread on the records of the court below December 30, 1913, and the physical property of the company in Kansas, both owned and leased, was accordingly turned over to the state receivers. There was also paid them the sum of $75,000. The federal receivers re-

tained subject to further directions of the court below approximately $1,000,000, including live credits which were shortly thereafter collected. Payments upon the funded debt and certain other obligations of the Kansas Natural Gas Company having been stopped, this amount in the hands of the federal receivers was materially increased by further receipts of the business. While the above proceedings were in course, other things occurred which have a bearing on the controversies here. On March 11, 1913, the Fidelity Trust Company, the mortgage trustee of the Kansas City Pipe Line Company, was made a defendant in the action in the state court, and the restraining order mentioned was extended to it. On June 21, 1913, the state court appointed a receiver of the Pipe Line Company. December 6, 1913, the insolvency of the Kansas Natural Gas Company, confessed by it in the foreclosure suit in the court below, was made an additional ground for the state receivership.

[1] The appeals now before us were taken from subsequent orders of the court below by the state receivers and by the pipe line company and its mortgage trustee, who had appeared as interveners. On January 23, 1914, the state receivers moved the court below to order its receivers to pay over to them all moneys then or thereafter in possession in virtue of the federal receivership. The Kansas Natural Gas Company, from the operation of whose property, owned and leased, the moneys came, asked that the motion be granted. The state receiver of the pipe line company also desired the moneys paid over subject to any liens and claims of that company or of himself as its receiver. As will be presently explained, the pipe line company owned extensive properties which by lease and contract had become embraced in the system operated by the Kansas Natural Gas Company. On January 24, 1914, the court below ordered its receivers to deliver to the state receivers the property of the Kansas Natural Gas Company in Missouri and Oklahoma to be returned by the latter at the end of their custody and operation of the property in Kansas, also, excepting a reservation not important here, to pay over to the state receivers all moneys then or thereafter in hand subject to all liens and claims with right to assert them in the state court. The state court thereupon directed its receivers to accept and receipt for the property and moneys upon the terms of the order of the court below. The pipe line company and its mortgage trustee appealed. Cause No. 4179.

On February 6, 1914, the court below modified the order of January 24th by limiting the amount of money to be paid over to $600,000. On March 12th the remaining federal receiver, the others having resigned, was ordered by the court below to continue collecting for all gas theretofore or thereafter sold to purchasers or consumers in St. Joseph, Kansas City, Joplin, and elsewhere in Missouri. From these sources a large part of the income from the entire business was derived. The Attorney General of the state and the state receivers renewed their earlier application for the moneys and complained of the orders of February 6th and March 12th as violative of the mandate of this court, and also because the federal receiver was allowed to collect for gas which he neither produced, bought, nor paid for,

but all of which was acquired, transported, and delivered by the state receivers. The application was denied March 23, 1914, except that the federal receiver was directed to pay the state receivers an additional $100,000; the order reciting:

"Which said money is paid for the express purpose, and for none other, to enable the state receivers of the district court of Montgomery county, Kan., to operate the entire property and to furnish a gas supply to patrons and consumers at St. Joseph, Mo., Kansas City, Mo., Joplin, Mo., and other places in the state of Missouri and subject to the right of the state court receivers to make further applications for money for said purposes."

The state receivers appealed from the order except as to the payment of the money. Cause No. 4195. The pipe line company and its mortgage trustee appealed from that part of the order directing the payment of the money. Cause No. 4196. Afterwards the pipe line company and its mortgage trustee prosecuted a further appeal from the orders of January 24th and March 23d (Cause No. 4202), and the state receivers applied for a writ of mandamus to require the judge of the court below to observe the mandate of this court (Cause No. 143, original).

A brief description of the property and business of the Kansas Natural Gas Company and the relation of the pipe line company thereto and its place in this litigation will assist the understanding of the controversies before us. The Kansas Natural Gas Company was engaged in the production, purchase, transportation by pipe lines, and marketing of natural gas. It supplied gas for lighting, heating, and manufacturing purposes in about 40 cities and towns in Kansas and Missouri. Its system of pipe lines, including those leased from other companies, extends from the Hogshooter gas field in Oklahoma, through eastern Kansas and across the Missouri river above Leavenworth, to St. Joseph, Mo., a distance of about 250 miles, with various branches therefrom, to Joplin, in southwestern Missouri, and the cities and towns in that neighborhood, to Kansas City, Mo., and Kansas City, Kan., and to Lawrence, Topeka, Leavenworth, and Atchison, Kan. Some of the gas is still obtained from wells in Kansas, but most of it from wells in Oklahoma. Much the larger part of the pipe line system is in Kansas; the lines into Missouri, particularly at Kansas City, being short in comparison. All the gas for the Missouri cities and towns goes through trunk pipe lines in Kansas. Gas for the larger cities in both Kansas and Missouri is generally sold to local companies formerly in the artificial gas business and is distributed by them to consumers.

Because of the nature of the natural gas business, the necessity of shifting the pipe lines and compressor plants to reach new sources of supply as gas wells give out, the physical interconnection of the various pipe lines owned and leased, the fact that the principal source of supply is in Oklahoma, while a large proportion of the sales is in Missouri, and most of the trunk lines are in Kansas, all agree that the system operated by the Kansas Natural Gas Company should be regarded as an integral indivisible unit. Both the court below and the state court so found in express terms. The federal receivers and the

state receivers have so represented, and the parties to the litigation by their respective counsel so state. Counsel for the pipe line company and its mortgage trustee, two of the appellants here, express the situation as follows:

"And it seems to be a conceded fact that the dismemberment of this system by segregating the parts in the different states, or by taking from it the fixed properties of the Kansas City Pipe Line Company, would wholly disable the entire system, confiscate the values of the several parts, and deprive a million people of a prime necessity of life."

Counsel for the protective committee of holders of the second mortgage bonds of the Kansas Natural Gas Company say that:

"A perpetuation of the dual receivership of the Kansas Natural Gas Company would wreck the property. * * * Interests of all parties concerned can best be served by making the management of the Kansas receivers exclusive over all the property, including money, now in the hands of the court or of the federal receivers."

Counsel for the other parties are hardly less positive.

About 35 per cent. of the pipe line system operated by the Kansas Natural Gas Company and a substantial part of the compressor plants and appliances necessary for its operation belong to the pipe line company. It owns the double line extending from Olathe, Kan., a short distance into Missouri at Kansas City, and the contracts with the local distributing companies of Kansas City, Kan., and Kansas City, Mo., are in its name. It also owns a trunk line closely paralleling one of the Kansas Natural Gas Company from Olathe to the northeastern part of Wilson county, Kan., and the double trunk line thence to Grabham in Montgomery county. The cities and towns in southern Kansas east of Montgomery county and those in southwestern Missouri are served through lines owned by the Kansas Natural Gas Company, as also are Topeka, Lawrence, Leavenworth, and Atchison, Kan., and St. Joseph, Mo. The lines of the Kansas Natural Gas Company extend but a short distance into Oklahoma. They connect there with the lines held under lease from another company, for which the state court has also appointed a receiver. To the southern end of these lines have been attached between 15 and 20 miles of pipe belonging to the pipe line company, removed there from Kansas.

The Kansas Natural Gas Company was organized in 1904. It has a capital stock of $12,000,000. June 20, 1904, it issued $4,000,000 of first mortgage bonds, and on March 1, 1906, an equal amount of second mortgage bonds. Both mortgages contain sinking fund provisions for the retirement of the bonds in annual installments in 12 years from their dates, respectively. The pipe line company, though having an independent corporate origin, was organized as an auxiliary of the Kansas Natural Gas Company. The latter owns one-half of its capital stock of $5,000,000. On August 1, 1907, the pipe line company issued $4,745,000 of mortgage bonds maturing annually in series, the last in 1918. The Fidelity Trust Company, one of the appellants, is the trustee in the mortgage. After the appointment of the federal receivers of the Kansas Natural Gas Company October 9, 1912, default was made in interest, sinking fund, and principal installments of the bonds of both companies.

On January 1, 1908, the pipe line company and the Kansas Natural Gas Company entered into a contract, termed a lease, whereby the former granted and leased to the latter, for 99 years from February 2, 1906, all its properties, franchises, and rights of every kind and description excepting its franchise to be a corporation, its corporate seal, office furniture, records, and muniments of title. Even the right to use its name in business and litigation was given. On its part the Kansas Natural Gas Company contracted to pay (1) all taxes and public charges upon the leased property, franchises, and rights, upon the bonds of the pipe line company, which it was required to pay or deduct, and upon dividends on its capital stock; (2) all interest upon the bonds issued by the pipe line company; (3) the annual requirements of the sinking fund to redeem the bonds; (4) a sum sufficient to enable the pipe line company to pay dividends of 6 per cent. on its capital stock; (5) the actual expense of maintaining the corporate organization of the pipe line company and of providing suitable offices for its officers and directors, not exceeding $500 per annum. In addition the Kansas Natural Gas Company assumed all outstanding obligations and liabilities, absolute and contingent, of the pipe line company. On January 1, 1913, the pipe line company asked leave of the court below to file an intervening petition in the foreclosure suit. With leave afterwards granted it filed a petition March 24, 1913, in which it appeared specially for the assertion of its rights under the lease, but otherwise denied the jurisdiction of the court over it. On January 24, 1914, its mortgage trustee, to whom the bond and interest sums were payable under the lease, joined it in an amended and supplemental intervening petition, claiming an adoption of the lease by the federal receivers and that by its terms there was then due $1,276,187.16. It was also averred that the first intervening petition was filed to give notice of a claim under the lease and to avoid an implication of a contract to accept compensation on the basis of quantum meruit. This amended and supplemental petition has not been determined by the court below. The amount claimed has since materially increased by the accrual of other sums under the lease. Large amounts are also due and unpaid on account of the first and second mortgage bonds of the Kansas Natural Gas Company.

The questions presented by the appeals before us are, in short: What should be done with the money, and the property in Missouri and Oklahoma, in the custody of the federal receiver? What should be done with the claims of the pipe line company? The pipe line company objects to the payment of any money or the further surrender of property to the state receivers until its demands under the lease are satisfied. Its position is that the court below had jurisdiction of all the property owned and leased by the Kansas Natural Gas Company until the part in Kansas was surrendered; that the federal receivers were rightfully in possession of and operating it; that the remaining federal receiver still has the property in Missouri and Oklahoma; that the state court has no jurisdiction outside of Kansas, and its receivers can exercise no authority beyond the borders of that state; that the property in Missouri and Oklahoma cannot be

lawfully surrendered to them; that much of the money now held by the federal receiver comes from the operation of the entire system before the property in Kansas was given up, and since then from the operation in Missouri and Oklahoma; that the lease of the property of the pipe line company was adopted by the federal receivers, and the sums due under it are an administrative or operating expense of the receivership, like the compensation of the receivers or the wages of their employés, which can be determined, allowed, and paid only under the orders of the court below; and, finally, that the pipe line company has a first and prior lien upon all the money in the hands of the federal receiver and the entire property of the Kansas Natural Gas Company, superior to all other claims and liens, including the two mortgages given by the latter, though those mortgages are first in time. On the other hand, the state receivers claim that because the action in the state court was first begun the federal receivership is void from the beginning, but if not so, then, when it lost control of the property in the primary jurisdiction in Kansas, it could not continue to hold in Missouri and Oklahoma under section 56 of the Judicial Code; also that the court below had no power to, and did not, charge the money and property with the demands of the pipe line company. The essential unity of the entire system, the imperative necessity for a single management and operation, and a single control of the income are urged.

Our conclusions may be briefly stated. The mere pendency of the action in the state court was not an obstacle to the appointment of receivers by the court below. The court below had jurisdiction of the parties before it and of the subject-matter, and, were there no other reason for its action, the trustee in the first mortgage of the Kansas Natural Gas Company had a right at once to impound the income from the mortgaged property, the state court not having yet acted. There was no conflict until it acted. The jurisdiction in Kansas was properly extended to Missouri and Oklahoma. When the state court appointed receivers, their superior right to the property in Kansas then arose, because of the nature of the action there and its prior pendency. That right was not self-executing, but in the orderly administration of justice was asserted by application in the court below. These principles were fully recognized in the opinion of the state court. The court below has the right to retain the foreclosure suit and await the progress and disposition of the action in the state court, with power to make such orders and decrees as future exigencies may require. When it surrendered the property in Kansas to the state receivers, it did not thereby lose the jurisdiction in Missouri and Oklahoma obtained under section 56 of the Judicial Code. The jurisdiction of the state court is confined to Kansas, and the authority of its receivers, as such, is no longer than the arm of the court. But their authority may be enlarged by agreement of the parties in interest, when agreeable to the court that appointed them, and not contrary to the laws of the states where the property is located, nor inconsistent with a prior jurisdiction. In such case they depend on convention rather than the force of judicial process.

The necessity for a common control and management of the entire system of the Kansas Natural Gas Company appears from every point of view. It is sought by the state receivers at the instance of the state court, and is not contrary to law. The Kansas Natural Gas Company, the owner and debtor, its first mortgage bondholders, and its second mortgage bondholders, as far as they have appeared, have urged the court to accomplish it. To divide the property and operate the several parts inharmoniously would cause great loss to the proprietary companies and the holders of their securities and would seriously impair the service to the public. Nothing can result from continuing the control of the federal receiver but confusion and loss, unless he act in an auxiliary or ancillary way to the state receivers, and that is not desirable for various reasons. The money on hand should follow the property. It would not be practicable to divide that earned after the state receivers were appointed on any than an arbitrary basis. Nothing is in the way of a complete surrender of all the property and money to the state receivers, except the possession and control by the court below over the property in Missouri and Oklahoma and the claim of the pipe line company and its mortgage trustee that the sums due under the lease are an expense of the federal receivership and a first lien upon the entire estate of the Kansas Natural Gas Company and the proceeds of its operations, which the court below and no other court can determine and pay. The court below may relinquish possession and control when justice requires it.

[2] We turn to the claim of the pipe line company and its mortgage trustee. In appointing its receivers the court below reserved to itself the power to approve or disapprove leases and contracts, and none were to be taken as adopted without its express order. No such order had been made as to the lease in question. The pipe line company has never formally asked the court below to adopt or disaffirm the lease. It relies for adoption upon administrative acts of the federal receivers, but they are not sufficient in this case. It has no lien as claimed upon the entire estate by the Kansas Natural Gas Company or the income from the receivers' operation. Its claim is under the lease. It was not affirmatively created by the court below or its receivers, and as asserted its relation to the usual, ordinary charges and costs of administration is not much closer, if at all, than that of the bondholders of the Kansas Natural Gas Company. To allow the preference claimed upon the entire property and income would displace the lien of prior mortgages to some extent. We pass the fact that the state court has appointed a receiver of the pipe line company, and enjoined it and its mortgage trustee from appearing in any other court for the determination of any matter affecting the corporate property, assets, or liabilities of the Kansas Natural Gas Company. If the case were free from complications, the court below might, under the prayer for general relief, determine the amount equitably due for the use of the leased property and order it paid before surrendering the fund. But it is not uncommon for a court to turn funds and property over to another court, subject to lawful claims to be determined by the latter. The state court has signified of record to take so

charged. That is not a recognition that any particular person has a preferential right, but a judicial acknowledgment that whatever right is found to exist will be protected. Undoubtedly the pipe line company and its bondholders have substantial equities; so have the bondholders of the Kansas Natural Gas Company. The attitude of the state court has been patient and careful. There is nothing to indicate that it would be less responsive than the courts of the United States to the obligations of contracts and the rights of those whose means have been invested in this precarious business, or more likely to allow demands for service and rates to go to the point of confiscation of private property.

The motion to dismiss in case No. 4179 is denied. The order of January 24, 1914, should be modified by making it additionally specific that the state receivers, with the express authority of the state court, accept the property and money subject to all lawful liens and claims arising under or by virtue of the receivership in the court below, or otherwise. The property in Missouri and Oklahoma and the money, less the amount of taxed costs and allowances, should be surrendered to the state receivers, upon their receipt, authorized by the state court and according to the order of January 24, 1914, as modified. As so modified, the order is affirmed. The other orders of the court below which are involved in these appeals are reversed, except so far as they direct the payment of money to the state receivers. The application for a writ of mandamus is denied, at the cost of petitioners. The matters involved in the appeals are remanded to the court below for further proceedings in conformity with this opinion.

(217 Fed. 196)

COLUMBIA RIVER PACKERS' ASS'N v. McGOWAN et al.

(Circuit Court of Appeals, Ninth Circuit. October 13, 1914.)

No. 2396.

APPEAL AND ERROR (§ 323*)—PARTIES—SEPARATE APPEAL BY ONE OR MORE PARTIES.

In an action for an injunction the court entered a separate judgment in favor of each of the three defendants against plaintiff in the sum of $7,361 as damages from a temporary injunction, and also a separate judgment that each defendant recover from the surety on the injunction bond the sum of $4,000, one-third the amount of the bond, which amount, it was recited, was included in the sum awarded against complainant, it being specially declared that the liability of the sureties and of the complainant was coequal to the extent of $4,000 and no more. *Held*, that an appeal by complainant would not be dismissed on the ground that the surety was a necessary party to the appeal, and that a separate appeal could not be maintained by complainant, since the decree was separate with respect to all the parties to it and distributive in its awards of damages, and from such a decree each of the judgment debtors may prosecute an appeal, and a failure to join all in an appeal is not fatal to the court's jurisdiction.

[Ed. Note.—For other cases, see Appeal and Error, Cent. Dig. §§ 1796, 1798–1805; Dec. Dig. § 323.*]

---

*For other cases see same topic & § NUMBER in Dec. & Am. Digs. 1907 to date, & Rep'r Indexes

Appeal from the District Court of the United States for the Southern Division of the Western District of Washington; George Donworth and Edward E. Cushman, Judges.

Action by the Columbia River Packers' Association against H. S. McGowan and others. From a judgment for defendants, plaintiff appeals. On motions to dismiss the appeal and for the issuance of a new citation. Motions denied.

G. C. Fulton, of Astoria, Or., for appellant.

Dorr & Hadley, of Seattle, Wash., and Welsh & Welsh, of South Bend, Wash., for appellees.

Before GILBERT, ROSS, and MORROW, Circuit Judges.

MORROW, Circuit Judge. On August 11, 1908, the appellant filed in the court below its amended complaint, wherein it asked for an injunction to enjoin and restrain the appellees, and Walter Bussey and I. N. Stensland, from placing in any of the waters of the Columbia river in front of or adjacent to three certain fishing sites, on Sand Island, alleged in the bill to belong to the appellant, or from maintaining in front of its premises in such waters, any obstruction whatever, and particularly the obstructions alleged in the bill to have been maintained there by the appellees, and from any interference with the free and uninterrupted ingress to and egress from such premises. A restraining order was granted by the court below, and the appellant was required to furnish a bond in the sum of $2,000, and subsequently an additional bond in the sum of $10,000. On each of these bonds the United States Fidelity & Guaranty Company became surety, "to pay all damages and costs which may accrue to the defendants by reason of said injunction or restraining order, not exceeding" the sum named in the bond. Answers and cross-complaints were filed by the appellees McGowan, Lindstrom, and Coyle (the defendants Walter Bussey and I. N. Stensland having been dismissed from the suit without costs). After a hearing before the court the restraining order theretofore issued against the appellees was dissolved, and it was ordered that the matter be referred to a special master for the taking of testimony upon the question of the damages suffered by the appellees by reason of the granting of the restraining order. In the report of the master it was found:

"That the defendants were equally interested in the fishing locations and that they should have separate judgments, each for one-third of the total amount of recovery, and each for one-third of the total costs incurred, * * * each of such judgments to be limited to $4,000 as against the bondsmen, which taken together, will make $12,000, the face of the bond."

On September 22, 1913, a final decree was entered by the court below, wherein it was ordered, adjudged, and decreed that separate judgments should be entered herein in favor of each of the defendants for one-third of the total amount of recovery, to wit, one-third of $22,083, and for one-third of the total costs incurred by the defendants, and that said judgments should also be entered against the United States Fidelity & Guaranty Company, the surety upon the injunction bonds given by the complainant in this cause, each judgment against

the surety, however, to be limited to the sum of $4,000. Thereupon the court entered a separate judgment in favor of each of the appellees, against the Columbia River Packers' Association, in the sum of $7,361, together with the sum of $316.10, costs taxed therein, and also a separate judgment that each of the appellees recover from the United States Fidelity & Guaranty Company, surety, the sum of $4,000, which amount it was recited was included in the sum awarded against the complainant in each judgment, it being especially declared that the liability of the surety and of the complainant was coequal to the extent of $4,000 and no more. From this decree and judgment the appellant has appealed to this court.

A motion to dismiss the appeal has been interposed by the appellees on the ground of failure of the appellant to include, as a party to the appeal, the United States Fidelity & Guaranty Company, the surety on the injunction bonds. The contention is that the surety company is a necessary party to the appeal for the reasons: First, that the judgment entered in the court below was a joint judgment against the appellant and its surety to the extent of the liability of the latter; and, second, that the record discloses that no notice was served or any attempt made to sever the interest of the appellant from that of the surety, so that a separate appeal might be maintained by the latter. The appellant meets the motion to dismiss the appeal filed by the appellees with a motion for an order directing the issuance of a new citation to the surety company. The appellees resist the motion of the appellant to thus amend its citation, and in support of their contention to dismiss the appeal they invoke the rule laid down by the Supreme Court of the United States in the case of Estes v. Trabue, 128 U. S. 225, 9 Sup. Ct. 58, 32 L. Ed. 437. In that case the writ of error was dismissed by the Supreme Court of its own motion, and the rule was there laid down that where the judgment below is a money judgment against the claimants and their sureties in a bond, naming them jointly, and the sureties do not join in the writ of error, and there is no proper summons and severance, the defect is a substantial one which that court could not amend, and by reason of which it had no jurisdiction to try the case, and it would of its own motion dismiss the case without awaiting the action of the parties. Referring to the judgment in that case the court said:

> "There is nothing distributive in the judgment, so that it can be regarded as containing a separate judgment against the claimants and another separate judgment against the sureties."

It was because the judgment in that case was joint and not distributive and separate against the claimants and sureties that it was held that all the parties against whom the judgment had been entered had not joined in the writ of error, and the court could not therefore try the case, and the writ of error was dismissed. That is not this case. In this case we have a separate, distributive judgment fixing the amount adjudged against the complainant in favor of each of the defendants, and also fixing the amount adjudged against the surety company on the complainant's bond, and in favor of each of the defendants. These judgments are clearly the exception mentioned by

the court, where the sureties have the right to a separate writ of error or appeal, and their failure to take such appeal does not deprive the appellate court of jurisdiction of the case with respect to the other appellants.

The case of Mason v. United States, 136 U. S. 581, 10 Sup. Ct. 1062, 34 L. Ed. 545, is also cited by the appellees in support of the motion to dismiss the appeal. In that case the action was against the postmaster at Chicago and the sureties on his official bond, the alleged breach being that he had not accounted to the United States for large sums of money received by him from the sale of postage stamps and other sources connected with the postal service. The process was against the postmaster and seven of the sureties jointly. The judgment does not appear in the record, but it is to be presumed that it followed the process and was joint against all the defendants. A writ of error was taken to the Supreme Court by certain of the sureties who had appeared in the court below, without joining the principal or certain other of the sureties who had made default. The plaintiff in error moved to amend the writ of error by adding the omitted parties as plaintiffs in error, or for a severance of those parties. The motion for leave to amend the writ of error was denied and the writ dismissed. The dismissal was in accordance with the rule declared in Estes v. Trabue, supra.

The case of Inland & Seaboard Coasting Co. v. Tolson, 136 U. S. 572, 10 Sup. Ct. 1063, 34 L. Ed. 539, decided by the Supreme Court on January 6, 1890, less than one year after the rendition of its decision in Estes v. Trabue, supra, and four months prior to the decision in Mason v. United States, supra, is not easily distinguished from those two cases. In this intermediate case a judgment had been rendered in favor of the plaintiff and against a sole defendant at a special term of the Supreme Court of the District of Columbia. The defendant appealed to the General Term and gave sureties. The General Term confirmed the judgment of the lower court and entered a judgment against the defendant and against the sureties. The defendant then sued out a writ of error from the Supreme Court of the United States, without joining the sureties. The defendant in error moved to dismiss the writ for nonjoinder of the sureties, and the writ was accordingly dismissed by the court on November 4, 1889. On December 23, 1889, counsel for the plaintiff in error moved to rescind the judgment of dismissal and to restore the cause to the docket. In support of the motion it was urged, among other things, that it was too late to sue out another writ of error. Counsel for the defendant in error resisted the motion, contending that the objection to the writ of error was jurisdictional and could not be cured by amendment, calling the attention of the court to its order of November 4, 1889, in the same case, and also to its decision in the case of Estes v. Trabue, supra, rendered less than one year prior thereto. On January 6, 1890, the motion to rescind the judgment of dismissal, to restore the cause to the docket, and to amend the writ of error by inserting the names of the sureties, was granted, and the case returned to the docket. The court rendered no opinion in the case, but it seems proba-

ble that the court deemed the judgment a joint judgment, and the amendment appears to have been allowed under the provisions of section 1005 of the Revised Statutes (U. S. Comp. St. 1901, p. 714). The case is not an authority for enlarging the terms of the statute to bring in parties to a separate judgment in an equity case by the issuance of an amended citation after the time for appeal has expired.

The case of Copeland v. Waldron, 133 Fed. 219, 66 C. C. A. 271, in this court, cited by the appellees in support of the motion to dismiss, was an appeal from a joint decree. It was there held that where the record failed to show that one of the defendants was in any manner joined in the appeal, or notified to join, or severed for failure or refusal to join, the defect was not one of form only which the Circuit Court of Appeals might permit the appellants to cure by amendment under section 1005 of the Revised Statutes, but was fatal to jurisdiction on appeal. The distinction between that case and the present case is obvious. In that case the decree was joint against all the defendants. In this case the decree is separate and distinct with respect to all the parties to it, and distributive in its awards of damages and costs against each. From such a decree each of the judgment debtors may prosecute an appeal, and a failure to join all in an appeal is not fatal to the jurisdiction of this court.

The rule applicable in this case is stated in 2 Cyc. 760, as follows:

"Where a decree or judgment is several both in form and in substance, and the interest represented by each of the coparties, plaintiff or defendant, is separate and distinct from that of the others, any party may appeal or sue out a writ of error separately, to protect his own interests, without joining his coparties in the appeal, and without a summons and severance."

The motion to dismiss the appeal is denied, and the motion for the issuance of a new citation is also denied.

(217 Fed. 200)

DUNSMUIR v. SCOTT, Collector of Internal Revenue.

(Circuit Court of Appeals, Ninth Circuit. October 13, 1914.)

No. 2386.

1. APPEAL AND ERROR (§ 671*)—TRIAL BY COURT—GENERAL FINDING—REVIEW.

Rev. St. § 649 (U. S. Comp. St. 1913, § 1587), provides that issues of fact in civil cases may be tried by the court with the written consent of the parties to waive a jury, and that the court's finding on the facts, which may be general or special shall have the effect of a verdict. Section 700 (U. S. Comp. St. 1913, § 1668) declares that when an issue of fact in a civil case is tried by the court without a jury, the court's rulings in the progress of the trial, if excepted to, and presented by bill of exceptions, may be reviewed, and when the finding is special the rule may extend to the determination of the sufficiency of the facts found to support the judgment. *Held*, that where a civil case is tried to the court and a general finding made, a review by the appellate court is limited to such rulings of the trial court in the progress of the trial as are presented by a bill of exceptions, which cannot be used to bring up the oral testimony for review.

[Ed. Note.—For other cases, see Appeal and Error, Cent. Dig. §§ 2867–2872; Dec. Dig. § 671.*]

*For other cases see same topic & § NUMBER in Dec. & Am. Digs. 1907 to date, & Rep'r Indexes

2. APPEAL AND ERROR (§ 842*)—SCOPE OF REVIEW—FINDINGS.

Whether at the close of the trial there is substantial evidence to sustain a finding in favor of one of the parties is a question of law which may be raised in an action tried to a jury by a request for a peremptory instruction and an exception to the refusal thereof, or, in case the trial is to the court, by a motion which presents the issue of law to the court for its determination, at or before the end of the trial, as by a motion or request for a special finding, and an exception to the denial thereof.

[Ed. Note.—For other cases, see Appeal and Error, Cent. Dig. §§ 3316–3330; Dec. Dig. § 842.*]

3. JUDGMENT (§ 828*)—RES JUDICATA—DETERMINATION OF DISMISSAL—DISTRIBUTION OF ESTATE.

Where a court exercising probate jurisdiction, in the course of a decree of final distribution recited a finding that testator was a resident of and domiciled in British Columbia, but was temporarily residing in the city and county of San Francisco, such determination was not res judicata as to testator's domicile as against the United States in proceedings to assess a war revenue tax on a legacy bequeathed by the will.

[Ed. Note.—For other cases, see Judgment, Cent. Dig. §§ 1556–1558; Dec. Dig. § 848.*]

In Error to the District Court of the United States for the Second Division of the Northern District of California; Wm. C. Van Fleet, Judge.

Action by James Dunsmuir against Joseph J. Scott, Collector of Internal Revenue, substituted in the place of August E. Muenter. Judgment for defendant, and plaintiff brings error. Affirmed.

The plaintiff in error brought an action against the defendant in error, the Collector of Internal Revenue, for the First collection district of the state of California, to recover the sum of $2,968.80, paid under protest to such collector as a tax under the provisions of the War Revenue Act of June 13, 1898, upon the legacy received by the plaintiff in error under the will of Alexander Dunsmuir. As alleged in the complaint, the right to recover the amount of the tax so paid was based upon two grounds: First, that Alexander Dunsmuir was domiciled in British Columbia at the time of his death, and that therefore the legacy was not subject to the tax; and, second, that the legacy had no taxable value by reason of the fact that it was burdened with the payment of an annuity of $25,000. The answer alleged that Alexander Dunsmuir was domiciled in California at the time of his death, and denied that the legacy had no taxable value. A jury trial was waived, and the cause was tried before the court. At the close of the testimony the court made a general finding for the defendant, and judgment was entered accordingly.

Andrew Thorne and Walton C. Webb, both of San Francisco, Cal., for plaintiff in error.

John W. Preston, U. S. Atty., and M. A. Thomas, Asst. U. S. Atty., both of San Francisco, Cal., for defendant in error.

Before GILBERT and ROSS, Circuit Judges, and WOLVERTON, District Judge.

GILBERT, Circuit Judge (after stating the facts as above). The plaintiff in error contends that there is no evidence to support the finding of the District Court that Alexander Dunsmuir was domiciled in San Francisco at the time of his death, and to sustain that contention presents to this court by a bill of exceptions the testimony received in the court below.

*For other cases see same topic & § NUMBER in Dec. & Am. Digs. 1907 to date, & Rep'r Indexes

[1] Under the provisions of Act March 3, 1865, 13 Stat. 501, Rev. St. §§ 649, 700 (U. S. Comp. St. 1913, §§ 1587, 1668), the rule is well settled that if a jury trial is waived, and a general finding is made by the court, review in an appellate court is limited to such rulings of the trial court in the progress of the trial as are presented by a bill of exceptions, and that the bill of exceptions cannot be used to bring up the oral testimony for review. Norris v. Jackson, 9 Wall. 125, 19 L. Ed. 608; Dirst v. Morris, 14 Wall. 484, 491, 20 L. Ed. 722; Grayson v. Lynch, 163 U. S. 468, 16 Sup. Ct. 1064, 41 L. Ed. 230; Streeter v. Sanitary District of Chicago, 133 Fed. 124, 66 C. C. A. 190; Hill v. Walker, 167 Fed. 241, 256, 92 C. C. A. 633; W. L. Perkins & Co. v. Von Baumbach, 185 Fed. 265, 107 C. C. A. 371; New York Life Ins. Co. v. Dunlevy, 214 Fed. 1, 130 C. C. A. 473. In Dirst v. Morris, Mr. Justice Bradley said:

"But as the law stands, if a jury is waived and the court chooses to find generally for one side or the other, the losing party has no redress on error, except for the wrongful admission or rejection of evidence."

[2] The question whether or not, at the close of the trial, there is substantial evidence to sustain a finding in favor of one of the parties to the action is a question of law which arises in the progress of the trial. Where the trial is before a jury that question is reviewable on exception to a ruling upon a request for a peremptory instruction for a verdict. Where the trial is before the court, it is reviewable upon a motion which presents that issue of law to the court for its determination at or before the end of the trial. In the case at bar there was no such motion and no request for a special finding. We are limited, therefore, to a review of the rulings of the court to which exceptions were reserved during the progress of the trial.

[3] Error is assigned to the admission of evidence which was offered as tending to prove that the place of domicile of Alexander Dunsmuir was, at the time of his death, in California. It is said that it was error to admit such testimony, for the reason that the decedent's domicile had been fixed and established by the judgment of the superior court of the state of California of date June 3, 1901, a copy of which judgment was introduced in evidence by the plaintiff in error. That judgment, as it appears by the record, was not a judgment admitting to probate the last will and testament of Dunsmuir, but was a decree of settlement of the final account of the executor, and the final distribution of the estate of the decedent in the state of California. In the course of the judgment it is recited that Dunsmuir was, at the time of his death, a resident of and domiciled at Victoria, British Columbia, but was temporarily residing in the city and county of San Francisco, "as appears from the evidence, both oral and documentary, introduced upon the hearing of the petition for distribution."

Passing the question whether such a finding was appropriately within the scope of such a decree of final settlement and distribution, we turn to the question whether the finding of the probate court as to the domicile of the decedent is res judicata as to the defendant in error herein. In Thormann v. Frame, 176 U. S. 350, 20 Sup. Ct. 446, 44 L. Ed. 500, it was held that the appointment of an executor or administrator of a

deceased person by the courts of one state cannot be held to foreclose inquiry as to the domicile of the deceased in the courts of another state, the court ruling that the judgment in rem of a probate court binds only property within the control of the court which rendered it, and citing with approval the case of De Mora v. Concha, 29 Ch. Div. 268, affirmed in the House of Lords, 11 App. Cas. 541, holding that the decree of a probate court is not conclusive in rem as to domicile, and intimating that the findings on which judgments in rem are based are not in all cases conclusive against the world. In Overby v. Gordon, 177 U. S. 214, 20 Sup. Ct. 603, 44 L. Ed. 741, it was held that the mere finding by a probate court of the fact of domicile in a proceeding in rem did not conclusively bind all the world as to that fact. In Tilt v. Kelsey, 207 U. S. 43, 28 Sup. Ct. 1, 52 L. Ed. 95, it was reaffirmed that an adjudication by a probate court that a testator was a resident of the state in which the court was held was not necessarily conclusive on the question of domicile, nor even evidence of it in a collateral proceeding. And although the court in that case held that the Surrogate Court of the county of New York had not the jurisdiction to decree the payment of a transfer tax alleged to be due the state of New York under a statute requiring the payment of such a tax where the decedent was a resident of that state, and so held on the ground that the decedent's will had been admitted to probate in New Jersey with an adjudication that he was a resident of that state, and proceedings thereupon had been had whereby his whole estate had there been distributed in accordance with the terms of the will, the decision was based expressly upon the ground that to permit the proceeding in the court of New York would be to deny full faith and credit to the judicial proceeding in the state of New Jersey, in violation of article 4, § 1, of the Constitution, since the effect of the judgment in the New York court would be pro tanto to set aside the judgment of the court of New Jersey. But the Supreme Court in the course of the opinion reaffirmed the doctrine of the cases above cited, and quoted with approval Brigham v. Fayerweather, 140 Mass. 411, 5 N. E. 265, in which the difference in the effect of a judgment on the res before the court and of the adjudication of the facts on which the judgment is based had been pointed out, and it had been held that the decree of a probate court admitting a will to probate was not, on an issue between parties, one of whom was not a party to the probate proceeding, competent evidence of the testator's mental capacity.

In the case now before us, the judgment of the court below had no effect upon the res which was before the probate court of California, and it has not the effect to disturb in any way the decree of that court as to the distribution of the property which was before it. It affects only the question of the liability of one of the legatees to pay a war tax on the legacy which he received under the will, and we hold that the right of the government to collect that tax is not precluded by the finding of the probate court that the domicile of Alexander Dunsmuir was in British Columbia. There was no error, therefore, in the admission of evidence which tended to show that his domicile was in California.

The judgment is affirmed.

(217 Fed. 204)

EASTERN OIL & RENDERING CO. v. THOMPSON.

(Circuit Court of Appeals, First Circuit. October 23, 1914.)

No. 1087.

APPEAL AND ERROR (§ 1064*)—HARMLESS ERROR—MISLEADING INSTRUCTIONS.

Plaintiff was employed in defendant's rendering plant to feed a suet hopper, to do which he was required to stand on a stool resting on a greasy and slanting floor. While doing so, his hand came in contact with the machine and was cut off. He testified that while standing on the stool another employé shoveled the suet so that plaintiff was struck in the chest, causing the stool to slip and plaintiff to fall, so that his hand came in contact with the machine. At the trial, defendant introduced in evidence a statement, signed by plaintiff, in which he stated that he was putting a piece of fat into the hasher, when the fat twisted in the worm and caught his hand, and that it was a pure accident. The court charged that plaintiff was bound to exercise reasonable care for his own safety, but there was no claim that he was careless so far as the particular accident was concerned, nor was the jury required to consider the question of assumed risk, but, with reference to the statement, that, if the jury should believe all that was in the paper, plaintiff could not recover, but that if he was overreached, did not understand, or was mentally dull, or his appreciation of his rights was impaired, and the statement was not a fair representation of what occurred, then he might recover, notwithstanding the statement. *Held*, that the instruction was not objectionable, as requiring the jury to believe all that was in the statement before they could render a verdict for defendant, but merely required them to believe the portion of it that had reference to how the accident occurred, and the instruction was therefore not misleading, to defendant's prejudice.

[Ed. Note.—For other cases, see Appeal and Error, Cent. Dig. §§ 4219, 4221–4224; Dec. Dig. § 1064.*]

In Error to the District Court of the United States for the District of New Hampshire; Edgar Aldrich, Judge.

Action by James L. Thompson against the Eastern Oil & Rendering Company. Judgment for plaintiff, and defendant brings error. Affirmed.

Edward K. Woodworth, of Concord, N. H. (Streeter, Demond, Woodworth & Sulloway, of Concord, N. H., on the brief), for plaintiff in error.

John L. Mitchell, of Portsmouth, N. H. (John H. Bartlett and Ernest L. Guptill, both of Portsmouth, N. H., on the brief), for defendant in error.

Before PUTNAM and BINGHAM, Circuit Judges, and BROWN, District Judge.

BINGHAM, Circuit Judge. This is an action of tort brought under the employers' liability statute of New Hampshire (chapter 163 of the Laws of 1911), for injuries received by the plaintiff on the 28th of April, 1913, while in the defendant's employment.

The plaintiff alleged in his declaration, and offered evidence tending to prove, that he was engaged in operating a dangerous machine used for cutting pieces of suet, the hopper of which was attached to

*For other cases see same topic & § NUMBER in Dec. & Am. Digs. 1907 to date, & Rep'r Indexes

the end of a table from which he fed the suet into the machine; that in the operation of the machine he was required to stand upon a stool 10½ inches high, 2 feet and 9 inches long, and 1 foot and 7 inches wide, which rested upon a greasy and slanting floor, to which it was not affixed; that, while standing in this manner upon the stool in the performance of his duties, another employé, who worked near him shoveling suet upon the table, negligently or accidentally shoveled the suet in such a way that the plaintiff was struck in the chest, causing the stool to slip or tip, and the plaintiff to fall, so that his left hand came in contact with the machine and was cut off by the revolving worm at the bottom of the hopper. No one testified as to how the accident occurred, except the plaintiff, and no other account was given as to how it took place, except as will appear from a statement claimed to have been given by the plaintiff a day or two after the accident.

No question was raised but that the evidence was sufficient to warrant the submission of the case to the jury. The defendant's complaint is that the court, in his charge to the jury, withdrew from their consideration the question whether the plaintiff was guilty of contributory negligence, and thereby committed error.

The portions of the charge that were excepted to read as follows:

"There are certain reciprocal obligations under a contract of service, and among them is the obligation of a man who wants work to exercise reasonable care in respect to protecting himself. I do not know that there is much in this case to consider on that phase of the case for two reasons. The first is that there is, I think, no claim made here that the plaintiff was careless himself, so far as this particular accident was concerned that caused the injury."

And:

"I do not think that there is any occasion to trouble yourselves about the question of assumption of risk, or about the question of the plaintiff's negligence, because I do not understand it to be claimed that he assumed the risk, except as his knowledge bears upon the question of contributory negligence—that is, his own negligence. I do not think the defendant is claiming that he was negligent; therefore there is nothing about the assumption of risk or his negligence for you to consider."

The defendant introduced in evidence the statement signed by the plaintiff, and the portions disclosing how the accident occurred are as follows:

"At the time I got hurt I was putting a piece of fat into the hasher with my left hand, and the fat twisted as it caught in the worm, and caught my hand. I pulled my hand as soon as it got caught, and I had it out before the machine was stopped. * * * It was merely a pure accident."

The court, in charging the jury with reference to this piece of evidence, said:

"A paper has been presented here which the witness, Mr. Quinlan, says he secured from this man [the plaintiff] the third day after the injury. I do not know exactly what to say about it, but you have a right to consider it. * * * You have a right to consider everything about it as bearing upon the question as to what you believe—as to which story you believe. Now, I think, if you should believe all that is in that paper, the plaintiff would not be entitled to recover here; but if you should believe that he was overreached, and that he did not understand, and that he was mentally dull, and that his appreciation of his rights was impaired, and that it was not a fair representation and does not fairly represent what occurred, and you believe

that what he states on the stand does fairly represent what occurred, you can see that that would be a different thing—that is, if you believe all that is in that paper, he would not be entitled to recover, because that cleans him out altogether on every branch of the case; but if you think that it does not fairly represent what he said, and you believe what he says here, then you will consider whether he is entitled to recover or not under the instructions which I have given you."

The defendant claims that the evidence contained in the statement above quoted tends to show that the plaintiff was guilty of contributory negligence, and for this reason takes the position that it was prejudiced by the charge wherein the court said that he thought no contention was made that the plaintiff was guilty of contributory negligence, and that it would not be necessary for them to consider that question.

It is apparent that the evidence as given by the plaintiff upon the witness stand and in the statement presents two distinct and divergent views as to how the accident occurred. The evidence given by him upon the witness stand, if believed, was of such a nature that the jury could find that the injury he sustained was due solely to the defendant's negligence in failing to provide a suitable place for him to work, and would not warrant a conclusion that he was guilty of contributory negligence. On the other hand, the evidence contained in the statement would not warrant a conclusion that his injury was due to the fault of the defendant, but that it was an accident or due to his own carelessness. It is also apparent that the court, in the portions of the charge here excepted to, was discussing the evidence as presented by the plaintiff upon the stand, and, had that been the only evidence of how the accident occurred, the court would have been fully justified in telling the jury they need not pass upon the question of contributory negligence.

When the court in his charge came to consider the evidence presented by the statement, which was the last thing he took up before finally submitting the case to the jury, he instructed them that if they believed all that was said in the statement as to how the accident occurred, and that what the plaintiff stated on the stand did not fairly represent how it occurred, then the plaintiff would not be entitled to recover, "because that cleans him out altogether on every branch of the case." It is true that in delivering this portion of the charge the trial judge did not state the grounds upon which his ruling was based —whether it was because the statement failed to show that the defendant was in fault, or whether it showed conclusively that the plaintiff's injury was due solely to his negligence, or was purely accidental. Whatever the reasons were which actuated him in giving this charge, it is evident that the jury were directed to give the evidence upon which the defendant relies as tending to show contributory negligence due consideration, and that the defendant's rights were in no way infringed, but were fully protected. If the jury believed the account of the accident as given in the statement, that was the end of the case; if they did not believe it to be a true statement of how the accident occurred, then the defendant was in no way prejudiced, because it could avail it nothing on the question of contributory negligence.

The defendant says that the charge required the jury to believe all that was in the statement before they could render a verdict for the defendant, and that, if they simply believed a portion of the statement, and that portion happened to be the part with reference to how the accident occurred, the jury would not be called upon to render a verdict for the defendant, and the defendant would be prejudiced, in that the jury would not then consider this portion of the evidence as bearing upon the question of the plaintiff's contributory negligence. But this is plainly an improper construction of this portion of the charge, for it manifestly did not call upon the jury to find that all that was contained in the statement was true before they could find a verdict for the defendant, but only that they should believe that all that was in the statement as to how the accident occurred was true, and, if they did, their verdict should be for the defendant.

We are therefore of the opinion that the jury were not misled to the defendant's prejudice by the portion of the charge excepted to, and that its exception should not be sustained. "A verdict is not set aside for erroneous instruction, when it is apparent, upon a reasonable construction of the whole charge, that the jury were not misled thereby." Saucier v. Spinning Mills, 72 N. H. 292, 56 Atl. 545; Theobald v. Shepard, 75 N. H. 52, 71 Atl. 26; Magniac v. Thompson, 7 Pet. 348, 390, 8 L. Ed. 709.

The judgment of the District Court is affirmed, and the defendant in error recovers his costs on appeal.

PUTNAM, Circuit Judge (concurring). The plaintiff's declaration was amended twice, once by formal amendment, and then by a paper entitled "Specification." The statute referred to in the opinion in its second section permitted the plaintiff to recover on account of the proof of an efficient negligence of a fellow servant sufficient to cause the injury. The case, as stated by the plaintiff's brief, was as follows:

"On this machine, as is shown by the photographs, was a hopper into which the suet was fed. At the bottom of the hopper was a revolving worm, which ground up the suet. The machine in question was at the left of the table onto which the suet was shoveled by the plaintiff's helper, and in the ordinary course of the work the plaintiff stood on the bench in front of the table, took up the chunks of suet as they were shoveled onto the table, and put them in the machine, which ground them to pieces. The plaintiff testified that he had been struck by his helper several different times before, that he was not watching the helper when he got hurt, that he was struck in the breast, but in spite of that fell forward, and not backward, and in such a manner that his left hand went into the hopper and down six inches onto the worm."

It is apparent that the real issue in the case was the truth of the plaintiff's statement which we have referred to. Although the position occupied by the plaintiff was dangerous in certain respects, and although he knew the danger and might be said to have assumed it, yet the efficient cause of the injury was the carelessness of the coservant in striking the plaintiff as he did, and there was in the case no real question of contributory negligence or assumption of risk.

At the close of the judge's charge there was a long discussion between the defendant's counsel and the court because the court, as the defendant said, had not instructed the jury properly on the question of

contributory negligence or the question of the assumption of risk; but there was no basis for instructions on either point, and, as the result of that discussion, no prejudice came to the defendant at the trial.

There was put into the case the statement by the plaintiff made a few days after the accident, and some question was made whether the statement should go in as an admission or as evidence, which was of no real consequence to the defendant, because the court instructed the jury that, if they believed the statement, it was the end of the plaintiff's case. It was not necessary to explain to the jury the reason therefor.

No objection was made at the time of the trial, or until the present argument, because in the long sentence covering the sum of the plaintiff's entire statement referred to the court instructed the jury that, if they believed "all" the statement, they should find a verdict against the plaintiff. Some criticism is now made on account of the use of the word "all," but none was made at the trial; and that, of course, was one of those minor criticisms which should have been specifically called to the attention of the court and objected to on the spot.

The basis of the discussion aforesaid, and of the grounds for asking a new trial at the present time, is the assertion of the defendant's position about contributory negligence or the assumption of risk; but the true issue was the negligence of a fellow servant, as we have said. The verdict was fully justified, unless the jury felt themselves bound by the statement made by the plaintiff, which we have referred to, and, of course, they were not thus bound.

(217 Fed. 208)

WILCKENS v. WILCKENS. †

(Circuit Court of Appeals, Eighth Circuit. October 12, 1914.)

No. 4160.

(Syllabus by the Court.)

1. WITNESSES (§ 150*)—COMPETENCY—TRANSACTIONS WITH DECEDENT—"REPRESENTATIVE."

An assign of a deceased person is held by the highest judicial tribunal of Nebraska to be his representative, within the meaning of section 6882, Comp. Stat. of Nebraska 1911, which prohibits any person, having a direct legal interest in the result of any civil action or proceeding, from testifying to any transaction or conversation between him and the deceased person, when the adverse party is the representative of the latter, and this ruling is controlling in the national courts.

[Ed. Note.—For other cases, see Witnesses, Cent. Dig. §§ 560, 653–657; Dec. Dig. § 150.*

For other definitions, see Words and Phrases, First and Second Series, Representative.

Competency of witnesses in federal courts, following state practice, see notes to O'Connell v. Reed, 5 C. C. A. 602; Hinchman v. Parlin & Orendorff Co., 21 C. C. A. 278.]

2. COURTS (§ 366*)—STATE AND FEDERAL COURTS—RULES OF DECISION.

The settled construction by the highest judicial tribunal of a state of the Constitution or statutes of that state is controlling in the national

---

*For other cases see same topic & § NUMBER in Dec. & Am. Digs. 1907 to date, & Rep'r Indexes

† Rehearing denied May 11, 1915.

courts, in the absence of any question of a violation of the national Constitution or statutes and any question of general or commercial law.

[Ed. Note.—For other cases, see Courts, Cent. Dig. §§ 954–957, 960–968; Dec. Dig. § 366.*

Conclusiveness of judgment between federal and state courts, see notes to Kansas City, Ft. S. & M. R. Co. v. Morgan, 21 C. C. A. 478; Union & Planters' Bank of Memphis v. City of Memphis, 49 C. C. A. 468; Converse v. Stewart, 118 C. C. A. 215.]

3. DEEDS (§ 211*)—WITNESSES (§ 139*)—DURESS—SUFFICIENCY OF EVIDENCE—COMPETENCY OF WITNESS—TRANSACTIONS WITH DECEDENT.

The plaintiff alleged that she was forced, by the duress of threats of her son to commit suicide, to convey her property to him, and brought suit after his death against his grantee to avoid her deeds. *Held*, she was not a competent witness to the transaction or the conversations relating to it, and that, after laying aside her testimony, her charge of duress was not sustained by substantial competent evidence.

[Ed. Note.—For other cases, see Deeds, Cent. Dig. §§ 637–647; Dec. Dig. § 211;* Witnesses, Cent. Dig. §§ 582–597; Dec. Dig. § 139.*]

Appeal from the District Court of the United States for the District of Nebraska; W. H. Munger, Judge.

Bill by Miene Wilckens against Alwine S. Wilckens. From decree for defendant, plaintiff appeals. Affirmed.

W. J. Courtright, of Fremont, Neb. (S. S. Sidner, of Fremont, Neb., on the brief), for appellant.

John J. Sullivan, of Omaha, Neb., and James G. Reeder, of Columbus, Neb. (Louis Lightner, of Columbus, Neb., on the brief), for appellee.

Before SANBORN and SMITH, Circuit Judges, and TRIEBER, District Judge.

SANBORN, Circuit Judge. This is an appeal by the complainant below from a decree of dismissal of her bill to avoid her deeds made on June 28, 1911, of 320 acres of land in Platte county, Neb., and two lots in Columbus in that state, to her son, Henry Wilckens, on the ground that she was forced to make them by the duress of his threats that he would commit suicide and her fear that he would do so if she did not make the conveyances. The appeal invokes a trial of the case de novo, and the record of the evidence has been examined with care, because the defendant below insists that it contains no competent evidence of the duress, in view of the fact that Henry Wilckens conveyed the property to his wife, the defendant below, on November 7, 1911, and committed suicide about March 15, 1912, before this suit was commenced.

[1] The statute of Nebraska declares that:

"No person having a direct legal interest in the result of any civil action or proceeding, when the adverse party is the representative of a deceased person, shall be permitted to testify to any transaction or conversation had between the deceased person and the witness." Comp. Stat. of Nebraska 1911, § 6882.

[2] In the absence of any question of a violation of the national Constitution or statutes and of any question of general or commer-

*For other cases see same topic & § NUMBER in Dec. & Am. Digs. 1907 to date, & Rep'r Indexes

cial law, the settled construction by the highest judicial tribunal of a state of the Constitution or statutes of that state is controlling in the federal courts, and the Supreme Court of Nebraska has decided that an assign of a deceased person is his representative, within the true intent and meaning of this statute.

[3] The plaintiff was therefore incompetent to testify to any transaction or conversation she had with her son, Henry Wilckens, regarding the issues in this suit, and her testimony thereto must be disregarded. Wamsley v. Crook, 3 Neb. 344; Parrish v. McNeal, 36 Neb. 727, 55 N. W. 222; Kroh v. Heins, 48 Neb. 691, 67 N. W. 771; Smith v. Perry, 52 Neb. 738, 741, 73 N. W. 282.

When her testimony is laid aside, there remains in support of the averment of the bill that, at and for a few days before the time of executing the conveyances, she "was repeatedly and many times threatened by her said son that, unless she made said conveyances, he also would commit suicide," and that she made the conveyances by reason of these threats, the following evidence to which counsel for the plaintiff challenge attention and on which they seem to rely. A. P. Groves testified that in January or February, 1909, more than two years before the deeds assailed were made, Henry told him that he was trying to get his mother to put the property in his name; that his mother objected; and that his father-in-law told him to tell her that, if she did not put the property in his name, he would kill himself. But this evidence is immaterial, because it discloses no threat made to plaintiff, incompetent because it is hearsay and irrelevant because, if such a threat were made in 1909, it was resisted for more than two years, and it does not tend to prove duress in June, 1911.

Fred Rabeler, Sr., testified that four or five years ago Henry said to his mother, "I will kill myself and you also;" and she wept; that on the morning of June 28, 1911, she said she would sign everything in order to relieve her of his threats; and that she said that Henry had told her if she did not sign he would kill her. But this evidence was incompetent, because the threat which this witness heard was so remote in time and so disconnected with the transaction of June, 1911, the remainder of his testimony about threats was hearsay, and the plaintiff, whose statement he repeated, was herself incompetent to testify to it.

Fred Rabeler, Jr., testified that the plaintiff had told him at different times that Henry had threatened her if she did not sign papers, and that he always proceeded by threats that he would commit suicide if she did not accede to his wishes. But this testimony is also hearsay and the repetition of the statement of an incompetent witness.

Ed. Wurdeman testified that a few days before June 28, 1911, the plaintiff told him that Henry had her in court; that about the only way to get out of it was to let him have his own way; and that, if she did not, she feared that he would commit suicide as he had threatened. But so far as the testimony of this witness is of a threat, it is also hearsay, the mere repetition of the statement of an incompetent witness, and incompetent. Where a grantor of sound mind conveys her property to her son, the burden is on the party who al-

leges that the conveyance was induced by duress to prove that averment. The record of the testimony in this case has been read and searched again and again, but there is no substantial competent evidence that Henry Wilckens, at or near in time to the execution of the deeds, threatened that he would commit suicide if the plaintiff did not sign them. No competent witness testified that he heard any such threat, and the only evidence of it is the incompetent testimony of the plaintiff and the hearsay testimony of witnesses to her incompetent self-serving statements, and the court is reluctantly forced to the conclusion that the plaintiff has utterly failed to bear the burden which was upon her to prove that Henry Wilckens made threats to commit suicide at or near the time she made the deeds which overcame her mind and will and caused her against her choice to make the conveyances. There are other facts clearly proved in this case that are not inconsistent with this conclusion. Henry Wilckens' father committed suicide in 1898, and it is doubtless true that the plaintiff ever after kept that fact in mind and feared that Henry, her only son and presumptive heir, might do likewise, and that she never failed to consider and give weight to that fact and fear in exercising her will and making her choice of her action in all she did and said in her relations and transactions with him. But that did not constitute compelling duress but the rational exercise of her mind and will and its free choice of her actions, in view of the fact of the father's suicide and the danger of the son. The plaintiff owned the property in this suit, which was worth many tens of thousands of dollars, from prior to the death of the father until 1906. At the request of her son, she procured money for him at various times and became a surety for the payment of many thousands of dollars of his debts. He was married to the defendant in 1906. In that year she made deeds of the property here in controversy to her son Henry and deposited them with trustees to be delivered to him at her death, in accordance with a written contract signed by her and Henry at that time to the effect that Henry should never advise, urge, or endeavor to influence her to sell or mortgage this property during her life, and that she would not sell, dispose of, or mortgage it, unless it should be necessary to do so to provide her with money to defray her necessary living expenses. On May 23, 1910, they made a written agreement of cancellation of this contract. In May or June, 1911, the plaintiff, who lived in Columbus, wrote Henry, who was then living in California, for money to go to Europe. On receipt of the letter he telegraphed that he would come to Columbus. When the plaintiff was informed that he was coming, she sought to have a guardian of herself and her property appointed so that she would have no power to convey it, and expressed fear that she would be unable to resist any demands he would make, and she executed a trust deed of her property to Mr. Ed. Wurdeman. On Henry's arrival he brought a suit against her and Wurdeman to set aside this trust deed. Fred Rabeler, Jr., and Ed. Wurdeman were her nephews, and they were bankers. She consulted with them, and under their advice she made an agreement of compromise with Henry on June 27, 1911, to the effect that his suit should be and it was dis-

missed; that the trust deed should be annulled; that the plaintiff should convey, and she did convey to Henry Wilckens, on the condition expressed in the deed that she had and should hold a lien on the property conveyed for the payment by him and his assigns to her of $900 on the 1st day of March in each year so long as she should live, the north half of the southeast quarter of section 34 and the west half of the northwest quarter of section 35 in township 19, range one west, and lots 3 and 4 in block 1 of Stevens' addition to Columbus, all in Platte county, Neb.; that she should also convey, and she did convey, to him the northeast quarter of section 34 in the same township and range; and that she should be released, and she was released, from all liability for the payment of many thousands of dollars of debts of Henry for which she was bound as his surety. On the next day the deeds of this property, which this suit was brought to avoid, were made by the plaintiff pursuant to this compromise, and it was performed in other respects. She gave no notice of repudiation or rescission of this contract, and took no steps to rescind it until April, 1912. Meanwhile Henry conveyed the property to his wife, who had no notice that the plaintiff claimed that she had been forced by duress to convey it to him, he became insane, and she placed him in a sanitarium and defrayed his expenses until he died.

The evidence fails to prove that threats or fears of her son's suicide had greater compelling force to cause her to make the deeds and compromise of June 28, 1911, than to cause her to make the deeds and agreement of 1906, or the cancellation of that agreement, or to take other action during the years after the death of her husband, and it cannot be held that all these acts were voidable for duress. The plaintiff was fully advised of the nature and legal effect of the transaction of June 28, 1911. She was not taken alone or by surprise and driven hastily without friends or advice to make the compromise and execute the deeds. She made them after consultation with and advice from her nephews, Fred Rabeler, Jr., and Mr. Wurdeman, experienced business men who knew her and her son, their relations, and her property, and the facts proved fail to sustain the conclusion that her mind or will were overcome and forced by duress to assent to them, and the decree below must be affirmed.

The result of this conclusion is that the plaintiff is entitled to the payment of $900 on the 1st day of March, 1912, and on the 1st day of March in each year thereafter as long as she lives, and, if that is not sufficient for her care and support in comfort in any year, to a sum not exceeding $250 in addition in that year and in each year in which the $900 is so insufficient, and to interest on all deferred payments; that these claims for payments are secured by a lien superior to all other liens and claims that have arisen since June 28, 1911, upon the north half of the southeast quarter of section 34 and the west half of the northwest quarter of section 35 in township 19, range 1 west, and lots 3 and 4 in block 1 of Stevens' addition to Columbus, all in Platte county, Neb., which is and will be enforceable by a proper suit in any court having jurisdiction, notwithstanding this suit and its dismissal on the merits, but the decree below must be, and it is affirmed.

(217 Fed. 213)

CANTON INS. OFFICE, Limited, et al. v. INDEPENDENT TRANSP. CO. et al.

(Circuit Court of Appeals, Ninth Circuit. October 13, 1914.)

No. 2382.

1. INSURANCE (§ 146*)—CONSTRUCTION OF CONTRACT.

A court should give to a written contract that reasonable construction which it is to be assumed intelligent business men would give it, and such rule applies to contracts of insurance equally with other contracts.

[Ed. Note.—For other cases, see Insurance, Cent. Dig. §§ 292, 294–298; Dec. Dig. § 146.*]

2. INSURANCE (§ 313*)—MARINE POLICIES—AVOIDANCE FOR BREACH OF WARRANTY.

Time policies of insurance on a vessel contained a provision written on the margin: "Vessel warranted employed in the general passenger and freighting business on Puget Sound within a radius of thirty miles from Seattle." Operation of the vessel was discontinued, and four months afterward, while moored in a river with no watchman on board, she filled and sank from some unknown cause. *Held*, that such warranty, given a reasonable construction, was that she would continue in the employment specified during the term of the policies, and that, when she departed from it for such length of time and was taken from the Sound, they became void.

[Ed. Note.—For other cases, see Insurance, Cent. Dig. § 710; Dec. Dig. § 313.*]

3. INSURANCE (§ 146*)—CONSTRUCTION OF CONTRACT—USAGE OF THE BUSINESS.

While an insurance contract must be construed with reference to the generally established usages and customs of the business, the words used are to be understood in their ordinary and popular sense, unless they have a different meaning by some definite usage brought home to the knowledge of the parties to be affected or so general and well established that their knowledge of it may be presumed.

[Ed. Note.—For other cases, see Insurance, Cent. Dig. §§ 292, 294–298; Dec. Dig. § 146.*]

Appeal from the District Court of the United States for the Northern Division of the Western District of Washington; Jeremiah Neterer, Judge.

Suit in admiralty by the Independent Transportation Company and another against the Canton Insurance Office, Limited, and the Yank-Tske Insurance Association. Decree for libelant, and respondents appeal. Reversed.

William H. Gorham, of Seattle, Wash., for appellants.

Kerr & McCord, of Seattle, Wash., and Ira A. Campbell, of San Francisco, Cal., for appellees.

Before GILBERT and ROSS, Circuit Judges, and WOLVERTON, District Judge.

GILBERT, Circuit Judge. On July 3, 1907, the appellants issued to the Independent Transportation Company polices of insurance covering its steamer Vashon, then engaged in the summer trade between the city of Seattle and Alki Point, a summer resort on Puget Sound, about six miles from Seattle. The policies covered the vessel from July

*For other cases see same topic & § NUMBER in Dec. & Am. Digs. 1907 to date, & Rep'r Indexes

3, 1907, until July 3, 1908. Each of the policies insured the owner against perils of the sea "and all other losses and misfortunes that shall come to the Vashon or damage to the said vessel insured or any part thereof, to which insurers are liable by the rules of insurance in San Francisco." In August, 1907, the Vashon discontinued her run to Alki Point, and until December was moored at the King street dock in Seattle. About December 1, 1907, she was removed from that dock and moored in the Duwamish river, a tributary of Elliott Bay. On December 15, 1907, the Vashon sank at her moorings. To the libels brought by the insured against the appellants, to recover on the policies, the appellants answered, denying liability thereon, and alleging a violation of the express warranty therein contained that during the term of the policies the vessel would be and remain employed in the general freight and passenger business on Puget Sound, within a radius of 30 miles from Seattle. The trial court construed the warranty otherwise, and ruled against the appellants, and entered a decree to enforce their liability upon the policies.

[1] A court should give to a written contract that reasonable construction which it is to be assumed intelligent business men would give it.

"Contracts of insurance, like other contracts, are to be construed according to the sense and meaning of the terms" which the parties have "used; and, if they are clear and unambiguous, their terms are to be" taken and "understood in their plain, ordinary, and popular sense." Imperial Fire Ins. Co. v. Coos County, 151 U. S. 452–463, 14 Sup. Ct. 379, 38 L. Ed. 231.

"Rules established for the construction of written instruments apply to contracts of insurance equally with other contracts." Liverpool, etc., Ins. Co. v. Kearney, 180 U. S. 132–135, 21 Sup. Ct. 326, 328 (45 L. Ed. 460).

[2] We find written on the margin of the policies involved in this case the following:

"Vessel warranted employed in the general passenger and freighting business on Puget Sound, within a radius of thirty miles from Seattle. Warranted no lime under deck."

These warranties cannot reasonably be construed to be other than what their terms plainly import: First, a warranty that during the term of the policy the vessel is to be navigated in the general passenger and freighting business, and on Puget Sound within a radius of 30 miles from Seattle; second, that during that time no lime shall be carried under deck. They are expressed in no unusual form. They are similar in phraseology to other warranties in marine insurance policies, examples of which are found on the margin of policies which were introduced in evidence in this case, such as "warranted free from capture, seizure, and detention," etc. "Warranted confined to Pacific Coast trade not north of Comox nor south of Valparaiso." All such warranties are inserted for the purpose of limiting and defining the risk. Before insuring a vessel, it is important to the insurance company to know in what business the vessel is to be engaged, and upon what waters she is to be navigated. Said Lord Watson, in Birrell v. Dryer, 9 App. Cas. 345:

"To define the limits within which the vessel is to be navigated, for the purpose of a time policy, is in principle precisely the same thing as to describe the voyage for which a vessel is insured under an ordinary policy."

But it is urged that the words of the warranty do not necessarily mean what they purport to say, but that another meaning may be found in them, and the rule is invoked that, where a provision of a policy of insurance is ambiguous, it is to be construed in the sense most favorable to the assured, since the instrument is prepared by the insurer, and it is contended that the warranty first above quoted may be construed to mean that the vessel, at the particular time of taking out the policy, was warranted to be engaged in the passenger and freighting business on the waters of Puget Sound within a radius of 30 miles from Seattle, or that she had prior thereto been so engaged. To this it is to be said that such a warranty would be of no value to either party to the insurance contract. It would not in any way affect the risk, and it is not conceivable that such a representation would have been embodied in the form of warranty. If it had been the intention to specify the business in which the steamer was or had been engaged, the warranty would have been that the vessel "is now carrying passengers between Seattle and Alki Point." The construction contended for by the appellee would be strained, unnatural, and unreasonable. By a like process of reasoning, most, if not all, warranties could be explained away. Thus the warranty "no lime under deck" might be said to mean that there never had been lime below the deck, and the warranty "no St. Lawrence," construed in Birrell v. Dryer, above cited, might be construed to mean that the vessel was not then navigating or had not navigated the waters of the St. Lawrence, and the warranty construed in Kirk v. Home Ins. Co., 92 App. Div. 26, 86 N. Y. Supp. 980, "warranted confined to the use and navigation of the waters of New Haven Harbor, and adjacent inland waters," could be explained to mean only that the vessel was warranted to have been theretofore confined to the use of those waters. In Birrell v. Dryer, the policy contained the words "warranted no St. Lawrence between the 1st of October and 1st of April." It was held that there was no ambiguity or uncertainty in these words sufficient to prevent the application of the ordinary rules of construction, and that, according to those rules, the whole St. Lawrence navigation, both gulf and river, was within the fair and natural meaning of those negative words. Lord Watson, discussing the contention that the words "no St. Lawrence" were ambiguous and must be applied to the river only, because underwriters are the proferentes with regard to a policy of insurance, said:

"That the underwriters may be rightly held to be the proferentes with regard to many conditions in a policy, I do not doubt; whether they ought to be so held depends, in each case, upon the character and substance of the condition. In the present case there are many considerations which lead to the inference that the clause in question is not one constructed and inserted by the appellants alone, and for their own protection merely. It was, in point of fact, inserted in the contract by the agent of the respondents; and it is in form a warranty by them that their vessel will not be navigated in certain waters, a matter which it was entirely within their power to regulate. These considerations point rather to the respondents themselves being the proferentes; but I think the substance of the warranty must be looked to; and that in substance its authorship is attributable to both parties alike. The main object of the clause is to define the limits within which the vessel is to be kept whilst she is navigated under the policy; and that appears to me to be as much the concern of the shipowner as of the underwriters."

In Kirk v. Home Ins. Co., 92 App. Div. 26, 86 N. Y. Supp. 980, the policy contained the provision "warranted confined to the use and navigation of the waters of New Haven Harbor and adjacent inland waters." The loss occurred while the dredge so insured was in inland water adjacent to Bridgeport Harbor, 17 miles from New Haven Harbor. The court held that thereby the policy was avoided. Answering the objection that the language of the policy must be construed strictly against the insurer, the court said:

"But we must, in reason, assume that the plaintiffs made the statement as to where the dredge was to be used; and it is as probable that the phrase in question was their language as that it was the defendant's. Under such circumstances, the rule that the policy must be construed most strictly against the insurer does not apply"—citing London Assurance Corp. v. Thompson, 170 N. Y. 94, 62 N. E. 1066.

We are of the opinion that there was breach of the warranty in two particulars: First, in that the insured vessel was taken out of the permitted waters, the waters of Puget Sound; second, in that her employment of carrying freight or passengers came to an end when she was anchored for the winter in the Duwamish river. We cannot yield to the appellee's contention that the waters of a river which flow into Puget Sound are waters of Puget Sound. In Hastorf v. Greenwich Ins. Co. (D. C.) 132 Fed. 122, the policy insuring a scow contained the following provision:

"Warranted by the assured to be employed exclusively in the freighting business, and to navigate only the waters of the bay and harbor of New York, the North and East rivers, and inland waters of New Jersey."

It was held that "North river" could not be extended by construction to include tributaries of the Hudson in the state of New York, and that there could be no recovery under the policy for injury to the scow received while she was lying at a dock in Rondout creek, 2½ miles from the Hudson. Said the court:

"There can be no doubt that Rondout creek is a different body of water from the North, or Hudson, river, and that the language used does not in terms cover the locality in which this accident happened."

The appellee cites Mannheim Ins. Co. v. Charles Clarke Co. (Tex. Civ. App.) 157 S. W. 291. The policy in that case contained this provision:

"Limited to the use of the Gulf waters of the United States between Key West, Fla., and the mouth of the Rio Grande del Norte, both inclusive."

The boat sank in the Atchafalaya, about 18 miles from its mouth. The question was whether the waters at that place were gulf waters, within the meaning of the policy. The court decided that they were, but in so deciding was influenced by the further provision of the policy which insured "against the adventures and perils of the harbors, bays, sounds, seas, rivers and other waters as above named."

The Vashon was left moored in the stream, with no watchman on board, and was placed in the charge of a man who lived in a boathouse some 200 feet away. He, or one of his men, according to his affidavit, visited the vessel every day. Without any known cause, the vessel filled with water and sank at her moorings. There was no stress of weather

or collision. The testimony of one witness tended to show that the water entered through some small holes on the inside lining of the hull, the plugs in the holes having been in some way removed, but this was contradicted by others. The risk to the vessel thus moored in a stream, with no one on board, was a widely different risk from that which the insurer undertook when it insured the vessel as employed in navigation and with her crew on board. We do not say that a vessel insured as being employed in navigation may not suspend navigation for a time, or lay up at a dock, but that is a different thing from going out of commission for a period of months.

In St. Nicholas Ins. Co. v. Merchants' Ins. Co., 11 Hun (N. Y.) 108, the policy insured a barge "while running on the Hudson and East rivers." It was held that these words did not restrict the insurance to the time while the barge was in motion, but that they were intended to describe the business of the barge, and to cover the time required for lading and unlading, as well as when the barge was in actual motion. The court said:

> "The term 'running,' as it was used by the defendant, must have been designed to include all that ordinarily would be comprehended by the business of a vessel in active employment. It described the condition of a vessel commercially engaged; and it was used by way of contrasting the difference between vessels laid up and out of use and those making trips upon the water."

The vessel in the case at bar was left unguarded and practically abandoned. If she had remained in commission with her crew on board, the mishap which caused her loss could not have occurred. But it is a matter of indifference whether or not the risk was enhanced by the breach of the warranty, for a warranty must be strictly performed. 2 Arnould, Mar. Ins. (7th Ed.) § 632.

It is contended that the evidence shows that, by custom and usage, the form of policy issued, referred to as the "San Francisco Hull Time Policy," covers a vessel when laid up. Several insurance brokers and adjusters were called to testify as to the meaning of the warranty in the policy, and while they all agreed that the words thereof were in common usage and had been employed in "hundreds" of policies, and that their meaning was that the vessel was to be employed in the general passenger and freighting business on Puget Sound during the entire period of the policy contract, they differed in their answers to the question whether or not such a policy would remain in force while the vessel was laid up. Five testified that the San Francisco underwriters hold the vessel insured under that form of time policy while the vessel is laid up. Two testified to the contrary. Two others testified that the right to lay up would be recognized only after application had been made to the insurance company and approved by the company, and one testified that in his opinion the insurance would continue after the vessel laid up, provided the hazard was not increased. This testimony, even if admissible, was insufficient to establish a custom.

[3] Where a written contract is on its face susceptible of a construction that is reasonable, resort cannot be had to evidence of custom or usage to explain its language. Insurance Co. v. Wright, 1 Wall. 456, 17 L. Ed. 505. While the insurance contract must be construed with reference to the generally established usages and customs

of the business, usage cannot be resorted to for the purpose of varying or contradicting the written instrument. Hearne v. Marine Ins. Co., 20 Wall. 488, 22 L. Ed. 395. The insured has the right to rely on the ordinary meaning and scope of the terms used in the policy, unless a more restricted meaning is proved to have been recognized and established by general mercantile usage, or else expressly brought to his notice. Red Wing Mills v. Mercantile Mut. Ins. Co. (D. C.) 19 Fed. 115.

In Odiorne v. New England Marine Ins. Co., 101 Mass. 551, 3 Am. Rep. 401, the court said:

"The usage which was offered to be proved is also inadmissible. Seccomb v. Provincial Insurance Co., 10 Allen [Mass.] 305. It is merely a usage among underwriters in Boston to construe a clause of the policy in a particular way. The clause in question is: 'Prohibited from the river and Gulf of St. Lawrence, Northumberland Straits, or Cape Breton, and Black Sea, between October 1st and May 1st.' There is nothing in this language so technical or peculiar, or having such application to a particular trade or branch of business, or a particular method of managing business, as to require the evidence of usage to explain it."

In that case the court held that the prohibition in the policy was in effect a warranty, and that the policy was avoided when the vessel sailed from St. Johns, Newfoundland, for Cape Breton.

In Cobb v. Lime Rock Fire & Marine Ins. Co., 58 Me. 326, it was held that the words "prohibited from the River and Gulf of St. Lawrence between September 1st and May 1st" constituted a warranty that the vessel should not enter those waters within the time mentioned. The court said:

"The words used are to be understood in their ordinary and popular sense, unless, by some known usage of trade, they have a different meaning. * * * The usage must be definite and brought home to the knowledge of the parties to be affected, or so general and well established that there must be ground to presume the parties had knowledge of it, or that they were bound to be informed of it."

The decree is reversed, and the cause remanded, with instructions to dismiss the libel as to the appellants herein.

(217 Fed. 218)

FAIRBANKS, MORSE & CO. v. NELSON.

(Circuit Court of Appeals, Ninth Circuit. October 13, 1914.)

No. 2379.

1. CONTRACTS (§ 238*)—PAROL MODIFICATION OF WRITTEN CONTRACTS—CONSTRUCTION OF STATUTE.

Civ. Code Cal. § 1698, which provides that "a contract in writing may be altered by a contract in writing, or by an executed oral agreement, and not otherwise," does not prevent a valid waiver by parol of a provision of a written contract.

[Ed. Note.—For other cases, see Contracts, Cent. Dig. §§ 1117, 1123; Dec. Dig. § 238.*]

2. CONTRACTS (§ 316*)—WAIVER OF BREACH.

A written contract may be waived in whole or in part, either directly or inferentially, and the waiver may be proved by express declarations

*For other cases see same topic & § NUMBER in Dec. & Am. Digs. 1907 to date, & Rep'r Indexes

manifesting the intent not to claim the advantage, or by so neglecting and failing to act as to induce the belief that it was the intention to waive.

[Ed. Note.—For other cases, see Contracts, Cent. Dig. §§ 1382–1387, 1395, 1398–1400, 1480–1491; Dec. Dig. § 316.*]

3. EVIDENCE (§ 450*)—PAROL EVIDENCE.

In an action for the price of a tractor engine, a provision of the contract that the sale was "with the understanding that it proves adequate for your work" left such clause open to explanation by testimony as to the understanding of the parties and the purposes for which the engine was to be used.

[Ed. Note.—For other cases, see Evidence, Cent. Dig. §§ 2066–2082, 2084; Dec. Dig. § 450.*]

4. PRINCIPAL AND AGENT (§ 103*)—CONTRACT MADE BY AGENT—AUTHORITY TO WAIVE PROVISIONS.

An agent, who made the contract for the sale of an engine for his principal, must be held to have had authority to subsequently waive a provision of the written contract.

[Ed. Note.—For other cases, see Principal and Agent, Cent. Dig. §§ 278–293, 353–359, 367; Dec. Dig. § 103.*]

In Error to the District Court of the United States for the Southern Division of the Southern District of California; Olin Wellborn, Judge.

Action at law by Fairbanks, Morse & Co., a corporation, against J. M. Nelson. Judgment for defendant, and plaintiff brings error. Affirmed.

The plaintiff in error was the plaintiff in the court below in an action to recover upon three several promissory notes, for $1,200 each, executed by the defendant in error in payment for a 30–60 horse power tractor engine, which was sold under a written contract. The parties will be designated herein plaintiff and defendant, as in the court below. The contract provided that: "Engine is sold with the understanding that it proves adequate for your work. For the purpose of testing out engine, we agree to furnish competent man for two days, within ten days of receipt of engine at Alessandro. This man to operate and demonstrate the engine regular working hours during his stay on your place. On or before the fifth day you agree to decide whether engine complies with your requirements or not." There was evidence that the engine was purchased for the purpose of drawing a combined harvester, as well as for plowing. On April 1, 1912, it was sent to the defendant. On April 2d the demonstration began, and it continued until 4:25 p. m. on April 3d. There was evidence that during the test difficulties arose, that the ground was wet in some places and in others it was sandy, and that the wheels of the engine sank into the ground, and at times slipped, that stone and cactus were put under the wheels, and one of the gang plows was removed, and that the representative of the plaintiff stated that these difficulties could be overcome by adjusting wide extensions to the wheels, so as to give them greater bearing on the ground, and that he would hurry home to telephone for the extensions, and that he also stated to defendant that the latter should use disc plows instead of gang plows. The extensions were furnished without charge to the defendant. Thereafter several breaks in the engine occurred, interrupting its use for long periods, until May 17th, when the extensions were put on. There was evidence that the defendant continued to operate the tractor, because he was told to go ahead and do the best he could with it. The defendant procured new disc plows as suggested, but, the same being unsatisfactory, on May 28th he telephoned to the plaintiff, asking that a man be sent out to see about it. He gave a similar notice on June 4th, and again on June 7th. On June 14th, having received no answer, the defendant wrote

*For other cases see same topic & § NUMBER in Dec. & Am. Digs. 1907 to date, & Rep'r Indexes

and notified the plaintiff that he was ready to help load the engine on the cars "according to contract." He wrote: "Your man assured me, if I only had disc plows, the engine would go all O. K.; but for the first six weeks I was annoyed with breaks and delays. However, I could overlook this if the engine would make the time it was claimed to do without making more than 375 revolutions a minute. You know, also, that it is from two to three tons heavier than claimed to be. To do harvesting successfully, the engine must travel two miles or more an hour, so that the harvester may handle the grain."

A jury trial was waived, and the cause was tried before the court. The court found in substance that according to the contract the engine was to prove adequate for the defendant's work; that the plaintiff had not complied with the contract; that the engine did not prove adequate for the work of the defendant as understood and agreed by the parties, and as provided in the contract, and that there was a breach of the warranty contained in the contract; that the provision in the contract whereby it was provided that the defendant should, on or before the fifth day from the beginning of the operation and demonstration of the engine, decide whether the same complied with his requirements or not, was waived by the conduct and representations of the plaintiff and its authorized agents; that within a reasonable time the defendant discovered that said engine was not adequate for his work, and notified the plaintiff of that fact, and requested that a man be sent to test properly and demonstrate the engine, and, the plaintiff having failed to comply with this demand within a reasonable time, the defendant notified the plaintiff that he was ready and willing at any time to assist the plaintiff or its employés, in accordance with the terms of the contract, to place the engine on board the cars at Alessandro, and to pay the freight on the same back to Los Angeles, as specified in the agreement; that by reason of the facts found, the contract and the notes became null and void and of no effect. Judgment was thereupon entered for the defendant.

Stutsman & Stutsman, of Los Angeles, Cal., for plaintiff in error.

William Collier and Hugh H. Craig, both of Riverside, Cal., for defendant in error.

Before GILBERT and ROSS, Circuit Judges, and WOLVERTON, District Judge.

GILBERT, Circuit Judge (after stating the facts as above). [1] It is assigned as error that the court admitted oral evidence to alter or modify the terms of the written contract, in violation of section 1698 of the Civil Code of California. The evidence so objected to was the testimony of the defendant that during the demonstration the wheels of the tractor sank into the ground to such an extent as to prevent successful operation, and that the agent of the plaintiff, to overcome the difficulty, promised to secure and furnish certain extensions to be put on the wheels to afford them a greater surface. It is said that the purpose of this testimony was to excuse compliance by the defendant with the obligation of his written contract to accept or reject the tractor on or before the fifth day. It is a sufficient answer to this assignment of error to direct attention to the fact that no objection was made to any of the testimony so introduced. But inasmuch as an exception was taken to the finding of the court below that the plaintiff by its conduct and representations waived the right to require the defendant to make his decision on or before the fifth day from the beginning of the demonstration, and that finding is assigned as error, we may properly consider the legal sufficiency of the testimony to sustain the same.

Section 1698, Civil Code of California, provides:

"A contract in writing may be altered by a contract in writing, or by an executed oral agreement, and not otherwise."

It is urged that by the evidence introduced by defendant, and the finding of the court thereon, the written contract between the parties was altered by means of parol testimony. But in our opinion the evidence and finding do not show an alteration of the contract, but only a waiver by the plaintiff of one of its provisions. That this can be done by parol is established by decisions of the Supreme Court of California. In Knarston v. Manhattan Life Ins. Co., 140 Cal. 57, 73 Pac. 740, the action was brought to recover upon a policy of life insurance which contained the usual forfeiture clause, and the defense was that the policy had been forfeited prior to the death of the assured by his failure to make payment of a semiannual premium. But it was shown that the assured secured from the officers of the company extensions of time within which to make the payment, and that before the expiration of the last extension he was killed in a railroad accident. The court held that the extensions of time might be proven by parol testimony, and that the effect of the evidence was not to vary the terms of the policy, but to show that the company had waived one of the conditions in its favor. Said the court:

"The provision of the Code, as well as the stipulation for a forfeiture in the policy, were equally matters of benefit to the company, and it is the rule that not only provisions in a contract may be waived by the party for whose benefit they are inserted, but that he may also waive statutory and even constitutional provisions, under which he may derive a benefit."

The court quoted from Broom's Legal Maxims, 547, the following:

"It is a well-settled maxim that a party may waive the benefit of any condition or provision made in his behalf, no matter in what manner it may have been made or secured."

And the court further said:

"This waiver may be established by evidence of an express waiver, or by circumstances from which said waiver may be inferred; and it may be by the managers of the company, or by a duly authorized agent."

The plaintiff attempts to distinguish the decision in that case from the case at bar upon the ground that in the Knarston Case the contract contained no obligation which required the assured to perform any specific act, whereas in the case at bar the written contract specifically required the defendant to perform an affirmative act; that is, to decide on or before the fifth day whether the engine complied with his requirements. But we find no difference in principle between the two cases. In both cases a provision of the written contract which was waived was one which was made for the benefit of the party which waived it, and it can make no difference whether that obligation was obligatory upon the other party, or whether performance was optional with him. The important fact is that the party for whose benefit the provision is made, and who has the right to exact its performance, may waive the same, and that this may be done not, by an agreement or contract between the parties, but by the act of him for whose benefit the provision has been made.

[2] In fact, the plaintiff in this case invokes the same principle of waiver; for, being under contractual obligation to make a demonstration of two days, its agent, before the completion of the second day's work, left the scene of the demonstration, and now the plaintiff justifies its agent's act in so doing by pointing to evidence which tends to show that it was assented to at the time by the defendant. The decision in the Knarston Case is in line with other decisions of the courts of California, and it is in harmony with the generally accepted rule that a written contract may be waived in part or in whole, either directly or inferentially, and the waiver may be proved by express declarations manifesting the intent not to claim the advantage, or by so neglecting and failing to act as to induce the belief that it was the intention to waive. Hilton v. Hanson, 101 Me. 21, 62 Atl. 797; Gilson v. Boston Realty Co., 82 Conn. 383, 73 Atl. 765; Rock Island Plow Co. v. Rankin, 89 Ark. 24, 115 S. W. 943; Brady v. Cassidy, 145 N. Y. 171, 39 N. E. 814; Du Planty v. Stokes, 103 Mich. 630, 61 N. W. 1015; Peabody v. Maguire, 79 Me. 586, 12 Atl. 630.

In Luitweiler Pumping Engine Co. v. Ukiah Water & Imp. Co., 16 Cal. App. 198, 116 Pac. 707, it was held that a buyer's retention of a pump and use thereof beyond the stipulated time was not a waiver of a right to rescind, where the pump was retained and used at the instance of the seller, or in order to enable the seller to remedy the defects. The court said:

"If the return of the machine, warranted to do good work, and found upon trial to be unfit for use, is delayed at the request of the manufacturer, he thereby waives the right to require prompt delivery by the purchaser on discovery of the fact that it does not do the work guaranteed."

In 30 Am. & Eng. Enc. of Law, 188, it is said:

"Stipulations in the contract of sale to the effect that a retention or use of the article sold shall constitute a waiver of any breach of warranty are valid, and are to be given effect according to their terms. But the buyer's retention and use of the article beyond the stipulated time will not operate as a waiver of the benefits of the warranty, where it was at the instance of the seller or his agent, or where it was for the purpose of giving the seller or his agent an opportunity to remedy defects."

In Sherman v. Ayers, 20 Cal. App. 733, 130 Pac. 163, the court said:

"It is contended by appellant that a clause in the contract provided that operation should constitute acceptance, and that the use by defendant for a short time of the engine was tantamount to an acceptance. It is true that such contract did provide that operation should constitute acceptance, but it certainly appears that no operation after a complete performance of the contract is shown. On the contrary, the whole of the operation, either by the employés of plaintiff's assignors, or by the defendant after they left, was in an effort to procure, if possible, information as to any existing defects, and to determine whether or not the same could be made to operate. The evidence does not disclose such an operation as, under the authorities cited, constitutes an acceptance."

The case of Jackson v. Porter Land & Water Co., 151 Cal. 32, 90 Pac. 122, cited by the plaintiff, is based upon facts which distinguish it from the case at bar. In that case the purchaser of an engine of horse power less than that for which he had contracted retained the

engine with knowledge of that fact, and used it during the entire irrigation season before raising the objection that it was not the engine contracted for. His conduct was held to be an acceptance of the engine which had been delivered to him.

The assignment that the court below erred in admitting testimony that in selling the engine the plaintiff exhibited to the defendant a circular, and in admitting the circular in evidence, cannot be considered here, for the reason that the circular is not in the record, and we are afforded no knowledge of its contents.

[3] Error is assigned to the ruling of the trial court in permitting the defendant to answer the question:

"What was the speed of that engine as it was stated to you in your negotiations?"

It is said that this was error, for the reason that all the negotiations were embodied in the written contract, and nothing was therein stipulated as to the speed of the engine. The contract did declare, however, that the engine was sold "with the understanding that it proves adequate for your work." In view of the findings of the trial court, it is impossible to see that the admission of the testimony, even if it were incompetent, could have affected the result. But, however that may be, we think the testimony was properly admitted for the purpose of explaining and justifying the action of the defendant in rescinding the contract. The undertaking of the plaintiff to sell an engine that would be adequate for defendant's work left that clause of the written contract open to explanation by testimony as to the understanding of the parties and the purposes for which the engine was to be used. This was permissible under the terms of sections 1856 and 1860 of the Code of Civil Procedure.

[4] Error is assigned to the ruling that it was admissible to prove the acts of plaintiff's agents, who visited the defendant's ranch. It is urged that such evidence should have been excluded, for the reason that there was no proof of the authority of the agents to bind the plaintiff. But the evidence indicated that the plaintiff did not disavow the acts of its agents, but ratified the same, and that it supplied without cost to the defendant the extensions to the wheels which one of the agents suggested as a remedy for the defective action of the engine. It further appears that one of those agents had acted for the plaintiff in making the sale of the engine to the defendant, and that he signed the contract for the plaintiff. In Advance Thresher Co. v. Vinckel, 84 Neb. 429, 121 N. W. 431, the court said:

"To say that its agents were vested with the mere naked power to sell and deliver, without any authority to waive or modify any term of the printed contract, would be, as is well said in Pitsinowsky v. Beardsley, Hill & Co., 37 Iowa, 9, 'to establish a snare by which to entrap the unwary, and enable principals to reap the benefits flowing from the conduct of an agent in the transaction of business intrusted to his hands, without incurring any of the responsibilities connected therewith.'"

It is assigned as error that the court found that there was a breach of the warranty by the plaintiff, and it is argued that the testimony conclusively showed that the engine was adequate for defendant's

work. There was testimony to the contrary, however, and the court below gave credence to it. The finding upon that branch of the case, therefore, is not open to review in this court.

We find no error. The judgment is affirmed.

(217 Fed. 224)

ARMOUR & CO. v. HARCROW.

(Circuit Court of Appeals, Eighth Circuit. October 12, 1914.)

No. 4068.

(Syllabus by the Court.)

1. NEGLIGENCE (§ 136*)—TRIAL—DIRECTION OF VERDICT—EVIDENCE.

When the evidence leaves the averment that an injury was caused by an act of negligence to speculation, without substantial evidence to sustain it, it is the duty of the court to instruct the jury to return a verdict for the defendant.

[Ed. Note.—For other cases, see Negligence, Cent. Dig. §§ 277-353; Dec. Dig. § 136.*]

2. NEGLIGENCE (§§ 58, 59*) — ACTIONABLE NEGLIGENCE — PROXIMATE CAUSE — "NATURAL CONSEQUENCE"—"PROBABLE CONSEQUENCE."

An injury which is the natural and probable cause of an act of negligence is actionable, and such an act is the proximate cause of the injury. But an injury that could not have been foreseen nor reasonably anticipated as the probable result of an act of negligence is not actionable, and such an act is either the remote cause or no cause whatever of the injury. The "natural consequence" of an act is the consequence which ordinarily follows it, the result which may reasonably be anticipated from it. A "probable consequence" is one that is more likely to follow its supposed cause than it is not to follow it.

[Ed. Note.—For other cases, see Negligence, Cent. Dig. §§ 71, 72; Dec. Dig. §§ 58, 59.*

For other definitions, see Words and Phrases, First and Second Series, Natural Consequences; Probable Consequence.]

3. MASTER AND SERVANT (§ 265*)—INJURY TO SERVANT—RES IPSA LOQUITUR.

The doctrine of res ipsa loquitur is inapplicable to cases between master and servant brought to recover damages for negligence, and the burden is on the plaintiff to allege and prove that the act of negligence of which he complains was the proximate cause of the injury.

[Ed. Note.—For other cases, see Master and Servant, Cent. Dig. §§ 877-908, 955; Dec. Dig. § 265.*

Application of doctrine of res ipsa loquitur in actions for injuries to servants, see note to Carnegie Steel Co. v. Byers, 82 C. C. A. 121.]

4. MASTER AND SERVANT (§ 285*)—INJURY TO SERVANT—SAFE PLACE TO WORK —PROXIMATE CAUSE—SUFFICIENCY OF EVIDENCE.

The plaintiff, a carpenter, was employed boring holes and inserting lag screws into joists, which rested on iron corbels on posts, through holes in the arms of the corbels about six inches from the posts. He stood on a ladder, with his face upturned, within about two feet of the corbel, boring a hole or inserting a lag screw, when a piece of rust or rusty iron fell from the corbel into one of his eyes and blinded it. The work in process was the repair of a beef extract room, by taking out old joists and putting in new ones. He knew that the corbels were rusty, and that dust and pieces of rust fell when the old joists were taken out. The room was so dark that he could not see the holes in the corbels, but he found them by feeling for them and inserting his fingers in them, and

*For other cases see same topic & § NUMBER in Dec. & Am. Digs. 1907 to date, & Rep'r Indexes

successfully bored six or eight holes, and inserted lag screws, when, after working from 10 a. m. until 5 p. m., the accident happened. At 11 in the forenoon and at 1 in the afternoon he had asked his foreman for more light, and had told him it was dangerous to work without it, and the foreman had promised to furnish light, but did not.

Held, here was no substantial evidence that the lack of light was the proximate cause of the accident, that the evidence left the issue whether or not the injury was caused by the lack of light to the mere speculation of the jury, and the court should have given a peremptory instruction for the defendant.

[Ed. Note.—For other cases, see Master and Servant, Cent. Dig. §§ 1002, 1003, 1007, 1008, 1016, 1035, 1043, 1053; Dec. Dig. § 285.*]

In Error to the District Court of the United States for the District of Kansas; John C. Pollock, Judge.

Action by William Harcrow against Armour & Co. Judgment for plaintiff, and defendant brings error. Reversed and remanded, with directions to grant a new trial.

William G. Holt, of Kansas City, Kan. (C. Angevine and J. K. Cubbison, both of Kansas City, Kan., on the brief), for plaintiff in error.

L. C. True and E. C. Little, both of Kansas City, Kan., for defendant in error.

Before SANBORN and CARLAND, Circuit Judges, and REED, District Judge.

SANBORN, Circuit Judge. Armour & Co., a corporation, complain that the court below erroneously refused to direct a verdict in its favor at the close of the evidence and permitted a judgment against it on the verdict of the jury in this case for $2,750.

[1, 4] Counsel for the defendant in error, the plaintiff below, ask in their brief in reply to that of the defendant below that the writ of error be dismissed, because in the printed record the case is entitled on the first page thereof and at the top of each printed page thereafter Armour Packing Co. v. William Harcrow, the bill of exceptions bears no title, but recites that at the opening of the trial Messrs. Angevine, Cubbison, and Holt appeared for Armour Packing Company, and the clerk certified that the copies of the bill of exceptions and other proceedings in the transcript were copies from the record of the proceedings in "Case No. 9030, C. C., entitled William Harcrow v. The Armour Packing Company." They argue that these facts show that the record brought here is of the proceedings in a case against Armour Packing Company, while the writ of error challenges the trial in a case against Armour & Co. An examination of the printed transcript, however, discloses the facts that the complaint and amended answer, the petition for removal from the state court, the order of removal, the journal entry of the trial, which recites the names of the witnesses whose testimony is recorded in the bill of exceptions, the verdict and judgment, and the petition for the writ of error were entitled "William Harcrow v. Armour & Co.," that the bill of exceptions has no title in the printed record because a rule of this court requires the omission of its printing, and it is presumed to

*For other cases see same topic & § NUMBER in Dec. & Am. Digs. 1907 to date, & Rep'r Indexes

have the same title as the pleadings, that Messrs. Angevine, Cubbison, and Holt, who are recited in the bill of exceptions as appearing for Armour Packing Company, signed the answer as attorneys for Armour & Co., removed the case from the state court for that company, procured the writ of error for that company and have acted for it throughout the proceedings, and that "Case No. 9030 C. C.," which the clerk of the court recites in his certificate is entitled "William Harcrow v. The Armour Packing Company," appears by the printed record to be the case of William Harcrow v. Armour & Co. by the number on the amended answer, on the journal entry of the trial, and on the journal entry of the verdict and judgment. There is, therefore, no doubt that the word "Packing" where it appears in the title in the printed record was inserted by a clerical error, the motion to dismiss the appeal is frivolous, and it is dismissed.

The action was for negligence. The only alleged negligence of the defendant submitted to the jury was a failure to provide sufficient light for the plaintiff to work by. The accident was the falling of something which the plaintiff did not see, but testified was rust or rusty iron, from an iron corbel, through a hole in which he was boring a hole or inserting a lag screw into a joist above it with his face upturned beneath it. The court charged the jury that, unless the plaintiff had proved that the accident and the injury to the plaintiff were directly caused by the defendant's failure to provide him sufficient light, he could not recover, and the defendant insists that it was the duty of the court to instruct the jury in its favor, because there was no substantial evidence that the lack of more light was the direct cause of the injury. The great preponderance of the evidence was that the room in which the plaintiff was working was sufficiently lighted, but the evidence to that effect is laid aside, and the case is considered and decided on the undisputed facts and the evidence for the plaintiff. The material facts of the case derived from these sources are these:

The defendant was engaged in repairing its beef extract room, which was 11 feet and 4 inches high from the floor to the joists and 110 feet long by 86 feet wide. There was at the time of the accident no ceiling to the room, and the employés of the defendant were removing the old and putting in new joists, which rested on iron corbels, each of which was supported by a post and had two arms or brackets, one extending each side of the post. In each of these arms and about 6 inches from the post there was a hole about three-eighths of an inch in diameter through which a lag screw was driven into the joist above the corbel about 3 inches to hold the joist in place. In the division of the labor of making these repairs the plaintiff was assigned to the duty of boring the holes in the new joists for these screws and screwing them up into their places. While doing this work he stood on a ladder, placed his bit through the holes in the corbels, bored the necessary holes in the joists and then inserted the lag screws. Plaintiff was a carpenter, and had been engaged in rough carpenter work for 14 years. He had assisted in remodeling and repairing old wooden structures, and had done such work as taking out old timbers and

inserting new ones. On the day of the accident he commenced boring holes and inserting screws at 10 a. m., and with an intermission for dinner worked until 5 p. m., when a piece of rust or rusty iron, as he believed, fell into his eye, from which it became blind. At the time of the accident his face was about 2 feet from the corbel. When he commenced work in the morning, he did not know the condition of the corbels and joists. He testified that:

"Every time I take out the old girders there would be dust—pieces of dust or rust fly off." "Q. Well, do you say you did or did not know that all the castings were rusty and the rust was liable to fall off the castings? A. Sure, the castings bound to be rusty. Q. Well, you knew that, didn't you? A. Couldn't think anything else but know they were rusty to some extent, but not shattering. Q. Not what? A. Not shattering, so a man couldn't work under them."

He testified that he had bored six or eight holes before the accident happened; that it was dark all day, so dark that he could not see the holes in the corbels; that he found the holes by feeling for them and inserting his fingers in them; that after that he inserted his bit in the holes and had no trouble in boring the wood; that about 11 o'clock he went to his foreman and told him he would have to have some light there—couldn't see how to do the work, and really dangerous for a man to work there—and the foreman said he would get lights; that he made a like complaint and received a similar answer about 1 in the afternoon; and that he would not have continued to work if the promises had not been made. The foreman never furnished more light. Was there any substantial evidence in the facts and testimony recited that insufficient light was the proximate or direct cause of the fall of the rust or rusty iron into the eye of the plaintiff?

[2] An injury which is the natural and probable cause of an act of negligence is actionable, and such an act is the proximate cause of the injury. But an injury that could not have been foreseen nor reasonably anticipated as the probable result of an act of negligence is not actionable, and such an act is either the remote cause or no cause whatever of the injury. The natural consequence of an act is the consequence which ordinarily follows it, the result which may reasonably be anticipated from it. A probable consequence is one that is more likely to follow its supposed cause than it is not to follow it. Chicago, St. Paul, Mpls. & Omaha Ry. Co. v. Elliott, 55 Fed. 949, 952, 5 C. C. A. 347, 350, 20 L. R. A. 582; St. Louis, K. C. & C. R. Co. v. Conway, 156 Fed. 234, 237, 86 C. C. A. 1, 4; Teis v. Smuggler Mining Co., 158 Fed. 260, 266, 267, 85 C. C. A. 478, 484, 485, 15 L. R. A. (N. S.) 893; Chicago, Burlington & Quincy R. Co. v. Richardson, 202 Fed. 836, 841, 842, 121 C. C. A. 144, 149, 150; Milwaukee & St. Paul Ry. Co. v. Kellogg, 94 U. S. 469, 475, 24 L. Ed. 256; Hoag v. R. R. Co., 85 Pa. 293, 298, 299, 27 Am. Rep. 653; Cole v. German Savings & Loan Soc., 124 Fed. 113, 115, 59 C. C. A. 593, 595, 63 L. R. A. 416; Mella v. Northern S. S. Co. (C. C.) 162 Fed. 499, 512, 513.

[3] The plaintiff knew the corbels were rusty, he knew that dust or rust flew off when an old joist was removed, he knew where the

hole he was boring or in which he was inserting the screw was, and that if he placed his open eye directly beneath it the chips from his boring or from the insertion of the screw might fall upon it, and this knowledge imposed upon him the duty to use reasonable care to prevent such a result. According to his testimony the place was so dark he could not see the hole, but he had no trouble in finding it with his fingers and inserting his bit and screw therein. Concede that it was the natural and probable consequence of turning his face up to the corbel and opening his eyes beneath it, while he was boring or inserting the screw, that chips or rusty iron or rust would fall into it. It does not follow that this would have been more likely to happen in the dark than in the light, for if he could not see the hole in the dark, there was less inducement and reason for him to open his eyes beneath it in the dark than there would have been if there had been light enough to have enabled him to see it, and it is common knowledge that articles fall into and injure the eye in the light as well as in the dark. No one could have foreseen or have reasonably anticipated that the lack of light would cause a chip or a piece of rust or of rusty iron to fall into the plaintiff's eye, and the truth is that the facts of this case prove that the proximate cause of the injury was the boring of the hole or the insertion of the screw, while the plaintiff held his open eye beneath and within about 2 feet of the corbel on which he was operating, and there was no substantial evidence that the absence of light in any degree induced it, or that it would not have resulted in the same way if more light had been provided.

The accident did not tend to prove that it was caused by the absence of light. The plaintiff alleged, and the burden was on him to prove, that it was. The doctrine res ipsa loquitur is inapplicable to cases between master and servant brought to recover damages for negligence. Cryder v. Chicago, R. I. & P. Ry. Co., 152 Fed. 417, 419, 81 C. C. A. 559, 561; Chicago & N. W. Ry. Co. v. O'Brien, 132 Fed. 593, 596, 598, 67 C. C. A. 421, 424, 426. And where the evidence leaves the issue whether or not an injury was caused by an act of negligence to speculation without substantial evidence to sustain the averment that it was, it is the duty of the court to instruct the jury to return a verdict for the defendant. Patton v. Texas & Pacific R. R. Co., 179 U. S. 658, 663, 21 Sup. Ct. 275, 45 L. Ed. 361.

The judgment below must therefore be reversed, and the case must be remanded to the court below, with directions to grant a new trial.

It is so ordered.

(217 Fed. 229)

CLARK v. HAMILTON.

(Circuit Court of Appeals, Eighth Circuit. October 12, 1914.)

No. 4134.

(Syllabus by the Court.)

BANKRUPTCY (§ 314*)—CREDITOR OF BANKRUPT CORPORATION—MONEY LOANED —STOCK ISSUE.

One who subscribes $5,000 in full payment for $10,000 par value of the contemplated fully paid increase of the stock of a corporation, pays the $5,000, and obtains the promissory note of the corporation to his trustee for that amount before the corporation has authorized the increase, on the condition, clearly expressed in the contract of subscription, that the $5,000 shall be treated as a loan to the corporation drawing interest at 6 per cent. until the corporation is ready to issue the fully paid stock of the par value of $10,000, becomes thereby the creditor of the corporation, and when the corporation never issues, or takes any steps to issue, the increase of stock, because it cannot legally issue it for a payment of 50 cents on a dollar without making the taker liable to pay another 50 cents on the dollar therefor, and is adjudged a bankrupt, he remains a creditor.

[Ed. Note.—For other cases, see Bankruptcy, Cent. Dig. §§ 469–473, 478, 483–487, 489, 490; Dec. Dig. § 314.*]

Appeal from the District Court of the United States for the District of Kansas; John C. Pollock, Judge.

A claim of Claude Hamilton against the estate of the Smith Automobile Company, a bankrupt, was allowed by the District Court, and F. B. Clark, trustee in bankruptcy of the bankrupt company, appeals. Affirmed.

The trustee in bankruptcy of the estate of the Smith Automobile Company, a corporation of the state of Missouri, appeals from an order of the District Court directing the allowance of the claim of Claude Hamilton as a general creditor for $5,000 and interest. The issue presented is whether Hamilton should be treated as a creditor or as a stockholder of the Smith Company. The material facts that determine the answer are these:

The Smith Company in the winter of 1909 owned a plant at Topeka, Kan., where it was making and selling automobiles. It had an issued capital stock of $181,000, of which L. Anton Smith owned about $60,000 and Walter L. Smith $49,000. In December, 1909, the corporation was in financial difficulty, and Walter L. Smith offered to sell to citizens of Grand Rapids, Mich., $50,000 of the stock of L. Anton Smith for $25,000 and to put his own stock in the name and control of a trustee, so that the Grand Rapids parties would have control of a majority of the stock and of the corporation. The latter parties appointed O. H. L. Wernicke, E. D. Conger, and A. C. Denison a committee to represent and act for them. After the plant and property of the corporation had been examined by the Grand Rapids parties, this committee made a contract with Walter L. Smith, evidenced by two writings made and signed at the same time, on or about January 1, 1910, wherein they recited that a group of Grand Rapids citizens contemplated providing the necessary additional capital "to relieve the corporation from its distressing financial situation and assuming, so far as may be desirable, control of the corporation," that this group had underwritten a proposition to raise $100,000 new capital, that this group was "the new stockholders" in the agreement, that the purchase of the $50,000 stock of L. Anton Smith "by the new stockholders is perfected" simultaneously herewith, and that "the new stockholders" were represented by Messrs. Wernicke, Conger, and Denison, who should execute the contract on behalf of such group. By the terms of the contract this committee agreed

*For other cases see same topic & § NUMBER in Dec. & Am. Digs. 1907 to date, & Rep'r Indexes

for these new stockholders that they would buy $50,000 of the stock of L. Anton Smith and pay $25,000 therefor, that they would proceed as rapidly as possible to obtain subscriptions for $100,000 in cash of new capital for the company in addition to the purchase price of the L. Anton Smith stock, that such steps should be taken that the subscribers for this new capital should "participate in the corporation on the same basis as those who purchase the L. Anton Smith series B stock at the agreed price 50 cents on the dollar," that within 10 days "the new stockholders," who had perfected the purchase of L. Anton Smith's stock and who were represented by their committee, would furnish $10,000, within 30 days $15,000 more, and the further sum of $25,000 within 90 days, that the remainder of the $100,000 new capital should be fully subscribed on or before June 1, 1910, and that "so far as such new capital is furnished to the corporation at dates before new stock is ready to be issued to the new stockholders therefor, such fund shall be, for the time being, evidenced by the notes of the corporation and shall be debts of the corporation, but, within the time here limited, such debts shall either be paid by the corporation out of the new capital furnished, or the new stockholders shall cancel the same pro rata in exchange for their new stock." Walter L. Smith agreed to sell and cause to be conveyed $50,000 par value of L. Anton Smith's stock for $25,000, to cause this stock and further stock to the amount of $60,000 par value to be surrendered and transferred to Arthur C. Denison, a trustee, to hold and vote this stock for the purpose of performing the contract, and that he (Walter L. Smith) would cause four (a majority) of the directors of the corporation, to resign, would transfer one share of stock to each of four persons to be specified by the Grand Rapids group, and would cause these persons to be chosen as directors in place of those who should resign. Walter L. Smith performed his part of this contract, and the new stockholders paid L. Anton Smith $25,000 for his $50,000 stock by January 8, 1910. The corporation was placed in their control by the change of directors and the transfer of a majority of its stock to Denison, their trustee, and Wernicke was made its president and Conger its treasurer.

Claude Hamilton was not one of "the new stockholders" who purchased the stock of L. Anton Smith, was not a party to the contract and writings between them and Walter L. Smith, and the record fails to show that he had any knowledge or notice of their terms. But some time after the foregoing contract was made, and after the new stockholders had taken over the control of the corporation, he signed a written subscription for $10,000 additional stock of the corporation, and paid to E. D. Conger, as trustee for him and other subscribers, $5,000, and Conger, as such trustee, loaned this money to the corporation and took its promissory note for it to himself as trustee. The subscription contract which Hamilton signed provided that the subscriptions were made on these terms: "A group of Grand Rapids men have taken over the control of the Smith Automobile Company and have underwritten an agreement that $50,000 of its present $200,000 series B stock shall be taken at 50 cents on the dollar. The stock will be ready for issue about March 15th. It is to be issued at this price as fully paid, to put the new stockholders in the same position as the present stockholders. Stock payments made before the new stock is ready for issue shall be treated in the meantime as loans to the company drawing interest at six (6) per cent. Subscriptions are now requested for the entire amount of $250,000 par value. * * * The underwriters will subscribe on the same basis as others, and their subscriptions will be, as far as they extend, in substitution for that underwriting liability." E. D. Conger, by common consent of the subscribers, and perhaps formally at one of their meetings, was made and acted as a trustee for the subscribers, to receive their subscriptions and use them as loans to the company until the new stock was issued, and, as the subscribers paid, he loaned their money to the company and took notes for it to himself as such trustee. They paid in about $73,000, and he took and still holds such notes for about that amount. Before the time came to issue the new stock the officers of the company ascertained that under the Constitution and laws of Missouri subscribers who took new stock from the corporation as fully paid when they actually paid only 50 cents on the dollar for it would be liable to pay as much more. The corporation never took the requisite legal steps to issue any increase of stock,

such as passing a resolution of its stockholders to increase it, publishing the record of such meeting, and paying the fee of the state therefor (Ann. St. Mo. 1906, §§ 1328, 1329, 956), and never issued any additional stock. Hamilton claimed, and the court below held, that he never became a stockholder.

W. S. McClintock, of Topeka, Kan. (D. W. Mulvane, C. E. Gault, D. R. Hite, and A. L. Quant, all of Topeka, Kan., on the brief), for appellant.

Hugh E. Wilson and Edgar H. Johnson, both of Grand Rapids, Mich. (Charles M. Wilson, of Grand Rapids, Mich., on the brief), for appellee.

Before SANBORN, Circuit Judge, and TRIEBER and REED, District Judges.

SANBORN, Circuit Judge (after stating the facts as above). The first position taken by counsel for appellants to support their claim that Hamilton became a stockholder, and not a creditor, of the Smith Company, is that the claim of the defendant is founded on notes issued pursuant to the contract of January 1, 1910, and is conditioned by the terms of that agreement, and they argue that the fact that Wernicke, who, as president of the company, executed its notes to Conger as trustee for the paying subscribers, was, as was Conger also, a member of the committee who made that contract on behalf of "the new stockholders" who purchased Smith's $50,000 of stock, sustains this view. But this contention disregards the plain facts of the case and the true relations of the parties. Hamilton was not one of "the new stockholders," who purchased Smith's stock and were represented by their committee, nor was he a party to the contract of January 1, 1910. He was a mere subscriber to a proposed increase of the capital stock of an old corporation. He dealt with that corporation at arm's length, a party adverse to it, when he made and acted under his contract of subscription, and the terms of that contract and of no other govern his rights. He made that contract after the contract of January 1, 1910, had been made, and after the part of it relating to the purchase of L. Anton Smith's stock and of the control of the corporation had been performed. He was neither a party to it, nor was he represented by the committee who made it, nor did he know its terms, and it does not condition, determine, or measure the rights or liabilities of either Hamilton, the corporation, or its creditors arising from his subscription and his payment thereon. Hamilton acted for himself, and never had any representative or agent in the transactions involved in this suit, except Conger, and the extent of his power to represent him was to loan his money to the corporation when he paid it on his subscription, and to take a promissory note of the corporation to himself as trustee for Hamilton, in accordance with the terms of his subscription contract.

The second contention is that the payments of the Grand Rapids parties to Conger were intended by them as contributions to capital and not as loans—and it rests on the contract of January 1, 1910, and fails to distinguish between the situation of "the new stockholders," who purchased the Smith stock and were represented by the committee

who made that contract for them, and a subscriber to the stock after that agreement had been made and partly performed. It is not persuasive.

It is next argued that, as against creditors, the Grand Rapids parties occupy the position of stockholders of the corporation, because the underwriters, the new stockholders, who controlled the corporation, had the power to comply with the requirements of the statutes of Missouri, and to increase and issue the stock, and because a certificate of stock is not indispensable to the creation of the relation of a stockholder. But Hamilton was not one of the new stockholders. He had no control over, or vote or influence on, the management of the corporation; nor had he any representative who had any power to act for him in directing its course. That corporation and all the parties in control of it were adverse parties to him in the contract of subscription which measured his relation to them.

It is true that where one subscribes for stock in a corporation unconditionally, and the contract of subscription is substantially performed, and he either takes his place and acts as a stockholder, or receives dividends or benefits as such, he may be estopped as against creditors from denying that he is a stockholder, although a certificate of stock has not been issued to him, or some formal prerequisite, such as publishing or recording the vote authorizing the issue of additional stock, has not been complied with. Stutz v. Handley (C. C.) 41 Fed. 531, 538, 540; Pacific National Bank v. Eaton, 141 U. S. 227, 233, 11 Sup. Ct. 984, 35 L. Ed. 702; Hawley v. Upton, 102 U. S. 314, 26 L. Ed. 179; Manufacturers' Paper Co. v. Allen-Higgins Co. (C. C.) 154 Fed. 906. But Hamilton never subscribed for stock unconditionally. He made a plain written contract that he would temporarily loan to the Smith Company $5,000, and that, on condition that the company would issue and deliver to him valid full-paid increased stock of the par value of $10,000, he would accept it in payment of his loan and become a stockholder. Neither the company nor the underwriters ever caused the other $5,000 required to purchase $10,000 of full-paid increased stock to be paid for it; neither took any legal steps to cause any increased stock to be issued, and Hamilton's loan, evidenced by the promissory note of the corporation to his trustee, Conger, remained unpaid, and he remained what he was from the beginning, a creditor of the corporation. He is not estopped from holding this position and enforcing his claim as a creditor as against other creditors of the corporation, because he never said, did, or omitted anything which tended to deceive them into the belief that he was other than a creditor, and there is no eveidence that any of them was induced by any representation, act, or neglect of Hamilton to change his position in reliance upon any such belief. His relation of creditor was evidenced by his written subscription contract and by the corporation's promissory note to his trustee, and he made no representation that these did not disclose his true relation to the corporation. The other creditors of the corporation have no greater rights than the corporation here. Hamilton was a creditor of the corporation when it received his $5,000, and he is a creditor still. One who subscribes $5,000 in full pay-

ment for $10,000 par value of the contemplated fully paid increase of the stock of a corporation, pays the $5,000, and obtains the promissory note of the corporation to his trustee for that amount before the corporation has authorized the increase, on the condition, clearly expressed in the contract subscribed, that the $5,000 shall be treated as a loan to the company drawing interest at 6 per cent. until the corporation is ready to issue the fully paid stock of the par value of $10,000, becomes thereby the creditor of the corporation, and when the corporation never issues or takes any steps to issue the increase of stock, because it cannot legally issue it for a payment of 50 cents on the dollar, without making the taker liable to pay another 50 cents on the dollar therefor, and is adjudged a bankrupt, he remains a creditor. McFarlin v. First National Bank of Kansas City, 68 Fed. 868, 871, 16 C. C. A. 46; Winters v. Armstrong (C. C.) 37 Fed. 508, 515; Bircher v. Walther, 163 Mo. 461, 63 S. W. 691; Mathews v. Columbia National Bank (C. C.) 77 Fed. 372, 373; Wolf v. Chicago Sign Printing Co., 233 Ill. 501, 84 N. E. 614, 13 Ann. Cas. 369.

Other objections to this conclusion, which have not escaped consideration, are: (1) That Wernicke about January 11, 1910, advertised that new capital to the amount of $100,000 had been subscribed; but Hamilton was not represented by Wernicke, or estopped by any action, representation, or omission of Wernicke, Conger, or any of the other new stockholders or parties in control of the corporation with regard to the issue of the increase of the stock or the subscription for it. (2) That the amounts paid by Hamilton and other subscribers were embarked in the corporation business, augmented its capital, and increased its credit, and therefore these subscribers became liable as stockholders for its debts. The evidence fails to convince that the amounts so advanced increased its capital, and if they increased its credit and were embarked in its business they only took the usual course and had the ordinary effect of moneys loaned to failing debtors, and these facts cannot be permitted to transform creditors into debtors or stockholders in violation of the terms of written agreements which clearly fix their situation. (3) That only about $48,000 out of the $73,000 paid in by the subscribers, and evidenced by the notes of the corporation given to Conger, their trustee, therefor, was received by the corporation; but the other $25,000 was paid for the $50,000 stock of L. Anton Smith, and that the subscriptions were for the purchase of the Smith stock as well as for the increase of stock. But Hamilton paid his full $5,000 to Conger, his trustee, and his trustee delivered it to the corporation and took that company's promissory note for it. If that corporation expended any part or all of it for the purchase of the Smith stock, and this is not clearly proved, that is no defense to the claim of Hamilton, for the corporation never delivered or offered to issue or deliver to him any of the stock purchased from Smith, or any other stock, and it received full consideration, the entire $5,000, for the claim of Hamilton, and he is neither liable nor accountable for the use the corporation made of the cash he paid it. (4) That the contract of January 1, 1910, between Walter L. Smith and the committee of the new stockholders provided that the $100,000 of new capital

should be subscribed by June 1, 1910, and that the notes given by the corporation should be paid out of such new capital. And (5) that the corporation has a claim against "the new stockholders," the underwriting committee, for their failure to procure the subscriptions for $100,000 and to take the necessary steps to cause the corporation to issue the contemplated increase of stock, which should be set off against the claim of Hamilton, because Conger, his trustee, who took the notes for him and the other subscribers, was one of the new stockholders, one of their committee, and one of the underwriters. But the limit of Conger's authority and liability as trustee for Hamilton and the other subscribers was to take the notes of the corporation for their benefit for the amounts they paid on their subscriptions. This he faithfully did. Hamilton and other subscribers under similar circumstances were in no way liable for the claims of the corporation against the new stockholders, their committee, the underwriters, or Conger as a member of or trustee or agent of them, and no claim against any of them constitutes a set-off against the claim of Hamilton against the corporation for his $5,000 and interest.

The order of the District Court that the claim of Hamilton be allowed as a general claim against the estate of the Smith Company, the bankrupt, was legal and righteous; and it is affirmed.

(217 Fed. 234)

BRAVIS v. CHICAGO, M. & ST. P. RY. CO.

(Circuit Court of Appeals, Eighth Circuit. October 12, 1914.)

No. 4163.

(Syllabus by the Court.)

1. COMMERCE (§ 27*)—INTERSTATE COMMERCE—INJURIES TO SERVANT—FEDERAL EMPLOYERS' LIABILITY ACT.

The federal Employers' Liability Act (Act April 22, 1908, c. 149, 35 Stat. 65 [U. S. Comp. St. 1913, §§ 8657–8665]) protects only those employed in interstate commerce. Those employed in the preparation or construction of roadbeds, rails, ties, cars, engines, and other instrumentalities which are intended for use in interstate commerce, but have never been and are not in use therein, are not employed in interstate commerce and are not protected by that act.

An employé engaged in the construction of a bridge, 600 feet distant from a railroad, on a cut-off more than a mile in length, which had never been provided with rails or used as a railroad, is not employed in interstate commerce, although his employer is so engaged and intends to use the cut-off therein when completed.

[Ed. Note.—For other cases, see Commerce, Cent. Dig. § 25; Dec. Dig. § 27.*

Employés engaged in interstate commerce within Employers' Liability Act, see note to Baltimore & O. R. Co. v. Darr, 124 C. C. A. 571.]

2. PLEADING (§ 369*)—INCONSISTENT CLAIMS—ELECTION OF CAUSES.

Where at the close of the plaintiff's evidence, in an action for negligence by an employé upon a complaint which in a single count sets forth a cause of action under the state law, the plaintiff so amends his complaint as to make it state in a single count a cause of action under the federal Employers' Liability Act, he thereby makes an election to abandon his cause of action under the state law and to rely on his cause of

*For other cases see same topic & § NUMBER in Dec. & Am. Digs. 1907 to date, & Rep'r Indexes

action under the federal act, which he is estopped from revoking or repudiating after a directed verdict against him on his pleading and evidence.

[Ed. Note.—For other cases, see Pleading, Cent. Dig. §§ 1199–1209; Dec. Dig. § 369.*]

In Error to the District Court of the United States for the District of Minnesota; Charles A. Willard, Judge.

Action by Nick Bravis against the Chicago, Milwaukee & St. Paul Railway Company. Judgment for defendant, and plaintiff brings error. Affirmed.

The plaintiff relies for a reversal of this case upon the single alleged error that at the close of his case the court directed a verdict for the defendant, on the ground that he had alleged and elected to claim a cause of action under the federal Employers' Liability Act and had failed to prove that the plaintiff at the time of his injury was employed by the defendant in interstate commerce. These were the facts relative to this question which had been proved when the court directed the verdict. The plaintiff had pleaded a cause of action for negligence of the defendant, but had not alleged that either the plaintiff or the defendant was engaged in interstate commerce when the trial commenced and the plaintiff's evidence was introduced. At the close of his evidence he amended his complaint by adding thereto allegations that at the time of the accident the plaintiff was employed by the defendant in interstate commerce and the defendant was engaged therein. Thereupon the defendant admitted that it was engaged in interstate commerce, and denied that it employed the defendant in interstate commerce, and the court held that there was no substantial evidence in the case that it did so. The evidence upon that subject presented this state of facts: The defendant owned and operated a railroad with a single track from Hopkins, Minn., to Aberdeen, S. D., a distance of about 277 miles, and was conducting interstate and intrastate commerce over it. There were many curves in the railroad, and the company was engaged in straightening and laying double tracks over it. At a place about 4 miles west of Chanhassen, Minn., it was building a cut-off from the railroad on one side of a curve about 3 miles in length to a point on the other side of it. It had laid the roadbed, but no rails, on this cut-off, and was building a concrete bridge upon it for a cattle pass at a point about 600 feet south of the railroad. The plaintiff was employed by the defendant in building this bridge. He boarded in a camp at Chanhassen, went on a hand car furnished by the defendant from Chanhassen to a point on the railroad north of the bridge, and thence walked to his work, and in the evening walked back to the railroad and returned on the hand car to the camp. The gang in which he was employed consisted of about 15 men, and they used two hand cars to transport themselves from and to Chanhassen. As they were returning to camp one evening, the plaintiff, who with his companions was engaged in pumping the forward hand car, fell off the rear of it, and the rear hand car ran over him and injured his right hand before the men upon it could stop it after they saw him.

Maurice Rose, of Minneapolis, Minn. (George B. Leonard, of Minneapolis, Minn., on the brief), for plaintiff in error.

F. W. Root, of Minneapolis, Minn. (Nelson J. Wilcox, of Minneapolis, Minn., on the brief), for defendant in error.

Before SANBORN, Circuit Judge, and TRIEBER and REED, District Judges.

SANBORN, Circuit Judge (after stating the facts as above). The chief contention of counsel for plaintiff in support of their specifica-

*For other cases see same topic & § NUMBER in Dec. & Am. Digs. 1907 to date, & Rep'r Indexes

tion of error in this case is that the facts established by the evidence sustain the conclusion that the plaintiff was employed in interstate commerce while constructing the bridge on the cut-off. But there were no rails on the roadbed on this cut-off. It never had been used, it was not then used, and until it should be ironed it could not be used, by the defendant in interstate commerce. The mere fact that it was the purpose and intention so to use it at some future time did not make it an instrumentality of interstate commerce. That purpose and intention might be changed, and it might never be used in interstate commerce, or at all. The argument that the building of the cut-off was the mere correction or prevention of a defect or insufficiency of the defendant's instrumentality for conducting interstate commerce is too remote and inconsequential to convince. The building of such a cut-off is new construction for use in interstate commerce, as much as the building of a new engine or car on plans prescribed by a railroad company to run over the cut-off or to take the place of an engine or car worn out in interstate commerce would be.

[1] The federal Employers' Liability Act protects only those employed in interstate commerce. Those employed in the preparation or construction of roadbeds, rails, ties, cars, engines, and other instrumentalities which are intended for use in interstate commerce, but have never been and are not in use therein, are not employed in interstate commerce, and are not protected by that act. There was no error in the ruling of the trial court that an employé engaged in the construction of a bridge, 600 feet distant from a railroad, on a cut-off more than a mile in length, which had never been provided with rails or used as a railroad, was not employed in interstate commerce, although his employer was engaged, and when the cut-off should be completed intended to use it, in interstate commerce. Pedersen v. Delaware, Lackawanna & Western R. R. Co., 229 U. S. 146, 152, 33 Sup. Ct. 648, 57 L. Ed. 1125; Wabash R. R. Co. v. Hayes, 234 U. S. 86, 34 Sup. Ct. 729, 58 L. Ed. 1226, filed May 25, 1914; Jackson v. Chicago, Milwaukee & St. Paul Ry. Co. (D. C.) 210 Fed. 495.

Counsel cite San Pedro, L. A. & S. L. R. Co. v. Davide, 210 Fed. 870, 127 C. C. A. 454, to the point that the plaintiff was employed in interstate commerce when he was injured, because he was assisting to run the hand car and to keep it out of the way of interstate commerce moving over the railroad. But in Davide's Case the employé was employed in interstate commerce during the day, and the court held that his employment extended from the time he started from his camp on the hand car in the morning until he returned to the camp at night. The plaintiff was not employed in interstate commerce during the day, and by the same mark he was not so employed while he was going on the hand car to and returning from his work. He bore the same relation to the defendant while he was on the hand car that he would have borne to it if he had walked on the railroad with its permission and at his own risk on his way to and from his work.

[2] It is said that the complaint, after its amendment, stated a good cause of action under the state laws and also under the federal Employers' Liability Act, and it is insisted in view of that fact that the

court erred in directing the verdict. This case does not present a complaint where, in separate counts, a cause of action is pleaded under the federal act and another under the state law, and no election is made, and we do not determine the effect of a motion for a directed verdict in such a case. It presents a case in which the plaintiff at the close of his own case so amended his complaint, which stated in a single count a cause of action under the state law, as to make it state a cause of action under the federal Employers' Liability Act. The plaintiff thereby elected to abandon his cause of action under the state law and to insist upon a recovery under the federal act. The defendant then moved for a directed verdict, and the court could not lawfully escape the decision of the only question thus presented, the question whether or not the evidence sustained the cause of action which alone the plaintiff had then pleaded and on which he had elected to rely. There was no error in its decision of that issue, and the plaintiff was estopped from repudiating his election. St. Louis, I. M. & S. Ry. Co. v. Hesterly, Adm'r, 228 U. S. 702, 33 Sup. Ct. 703, 57 L. Ed. 1031; Union Pacific Ry. Co. v. Wyler, 158 U. S. 285, 15 Sup. Ct. 877, 39 L. Ed. 983; Northern Pacific Ry. Co. v. Slaght, 205 U. S. 122, 131, 27 Sup. Ct. 442, 51 L. Ed. 738; Matz v. Chicago & A. R. R. Co. (C. C.) 88 Fed. 770; Whalen v. Gordon, 95 Fed. 305, 314, 37 C. C. A. 70, 79.

Let the judgment below be affirmed.

(217 Fed. 237)

LANE v. SARGENT.

(Circuit Court of Appeals, First Circuit. October 23, 1914.)

No. 1084.

1. EVIDENCE (§ 52*)—JUDICIAL NOTICE—STATE LAW.

Where suit is instituted in the federal court for the district of New Hampshire to recover damages for injuries received by plaintiff by being run into by defendant's automobile in Massachusetts, the court will take judicial notice of the law of the road of Massachusetts, and decisions of the Supreme Judicial Court of that state are therefore not admissible in evidence to prove the Massachusetts law as a fact.

[Ed. Note.—For other cases, see Evidence, Dec. Dig. § 52.*

Judicial notice of public laws and regulations, see note to Smith v. City of Shakopee, 44 C. C. A. 4.]

2. TRIAL (§ 252*)—INSTRUCTIONS—APPLICABILITY TO EVIDENCE.

In an action for injuries to plaintiff by being struck by defendant's automobile approaching from the rear, while he was crossing from one side of a street to the other, requests to charge that defendant was entitled to assume that plaintiff would continue in the direction he was going until he gave reasonable notice of going in a different direction, and that plaintiff, who when first observed was walking in a place of safety, would continue to exercise ordinary care, not only in crossing, but in continuing on his way, were properly refused, as assuming, contrary to the evidence, that plaintiff, if he had continued on his way, walking beside a car track, would have been in a place of safety, and that he did not seasonably indicate his intention to change his course, and was not in the exer-

*For other cases see same topic & § NUMBER in Dec. & Am. Digs. 1907 to date, & Rep'r Indexes

cise of ordinary care in attempting to cross the street when he did, observing the automobile from 100 to 300 feet away.

[Ed. Note.—For other cases, see Trial, Cent. Dig. §§ 505, 596–612; Dec. Dig. § 252.*]

3. TRIAL (§ 260*) — INSTRUCTIONS — REQUESTS TO CHARGE — INSTRUCTIONS GIVEN.

Where the jury were properly instructed on the issues in the case, the refusal of requests to charge is not error.

[Ed. Note.—For other cases, see Trial, Cent. Dig. §§ 651–659; Dec. Dig. § 260.*]

4. MUNICIPAL CORPORATIONS (§ 705*)—STREETS—USE—CARE REQUIRED.

A pedestrian and the operator of an automobile have equal rights in a city street, and each is bound to use ordinary care to avoid the other.

[Ed. Note.—For other cases, see Municipal Corporations, Cent. Dig. §§ 1515–1517; Dec. Dig. § 705.*]

In Error to the District Court of the United States for the District of New Hampshire; Edgar Aldrich, Judge.

Action by Alvah W. Sargent against John P. Lane. Judgment for plaintiff, and defendant brings error. Affirmed.

Edward C. Stone, of Boston, Mass. (Sawyer, Hardy & Stone, of Boston, Mass., on the brief), for plaintiff in error.

John L. Mitchell, of Portsmouth, N. H. (John H. Bartlett, of Brockton, Mass., on the brief), for defendant in error.

Before PUTNAM and BINGHAM, Circuit Judges, and BROWN, District Judge.

BINGHAM, Circuit Judge. The plaintiff, Sargent, a citizen of the state of New Hampshire, brings this action against the defendant, Lane, a citizen of the commonwealth of Massachusetts, in the District Court of the United States for the District of New Hampshire, to recover damages for injuries received on August 4, 1912, by being run into by an automobile operated by the defendant. The accident took place while the plaintiff was crossing Main street, in Salisbury, Mass. There was a trial by jury and a verdict for the plaintiff. The case is now here on defendant's bill of exceptions, and the errors assigned are to the exclusion of certain evidence offered by the defendant and the refusal of the judge to give certain requests for rulings.

The accident having occurred in Massachusetts, and the law of the road of that state being a material point in the case, the defendant offered to show what the law of Massachusetts on that subject was by introducing in evidence three decisions of the Massachusetts Supreme Judicial Court, as reported in Galbraith v. West End St. Ry. Co., 165 Mass. 581, 43 N. E. 501, Scannell v. Boston Elevated Ry. Co., 176 Mass. 173, 57 N. E. 341, and Commonwealth v. Horsfall, 213 Mass. 232, 100 N. E. 362, Ann. Cas. 1914A, 682. The evidence was excluded, and the defendant excepted. The trial court, in excluding the evidence, made the following ruling:

"I think this question is a question of law for the court to pass upon, and the court is very glad to have any citation of Massachusetts law submitted to the court, and the court will instruct the jury upon what the Massachusetts

*For other cases see same topic & § NUMBER in Dec. & Am. Digs. 1907 to date, & Rep'r Indexes

law is. Upon that assumption, with this view of the law, the court will not allow the opinions of the Massachusetts court which have been called to its attention to be read to the jury."

[1] The defendant contends that the law of Massachusetts, where the accident occurred, is the law of a foreign jurisdiction, and must be proved as a fact; that the court could not take judicial cognizance of it. This contention cannot be sustained. In Mills v. Green, 159 U. S. 651, 657, 16 Sup. Ct. 132, 134 (40 L. Ed. 293), Mr. Justice Gray, in delivering the opinion of the court, said:

"The lower courts of the United States, and this court, on appeal from their decisions, take judicial notice of the Constitution and public laws of each state of the Union. Owings v. Hull, 9 Pet. 607, 625 [9 L. Ed. 246]; Lamar v. Micou, 112 U. S. 452, 474 [5 Sup. Ct. 221, 28 L. Ed. 751]; Id., 114 U. S. 218, 223 [5 Sup. Ct. 857, 29 L. Ed. 94]; Hanley v. Donoghue, 116 U. S. 1, 6 [6 Sup. Ct. 242, 29 L. Ed. 535]; Fourth National Bank v. Francklyn, 120 U. S. 747, 751 [7 Sup. Ct. 757, 30 L. Ed. 825]; Gormley v. Bunyan, 138 U. S. 623 [11 Sup. Ct. 453, 34 L. Ed. 1086]; Martin v. Baltimore & Ohio Railroad, 151 U. S. 673, 678 [14 Sup. Ct. 533, 38 L. Ed. 311]."

And in Hanley v. Donoghue, 116 U. S. 1, 6, 6 Sup. Ct. 242, 245 (29 L. Ed. 535), the same Justice, in speaking for the court, said:

"In the exercise of its general appellate jurisdiction from a lower court of the United States, this court takes judicial notice of the laws of every state of the Union, because those laws are known to the court below as laws alone, needing no averment or proof. * * *

"But on a writ of error to the highest court of a state, in which the revisory power of this court is limited to determining whether a question of law depending upon the Constitution, laws, or treaties of the United States has been erroneously decided by the state court upon the facts before it—while the law of that state, being known to its courts as law, is of course within the judicial notice of this court at the hearing on error—yet, as in the state court the laws of another state are but facts, requiring to be proved in order to be considered, this court does not take judicial notice of them, unless made part of the record sent up, as in Green v. Van Buskirk, 7 Wall. 139 [19 L. Ed. 109]. * * *

"Where by the local law of a state (as in Tennessee, Hobbs v. Memphis & Charleston Railroad, 9 Heisk. 873) its highest court takes judicial notice of the laws of other states, this court also, on writ of error, might take judicial notice of them."

See Martin v. Baltimore & Ohio Railroad, 151 U. S. 673, 678, 14 Sup. Ct. 533, 38 L. Ed. 311.

The Pawashick, 2 Low. 142, Fed. Cas. No. 10,851, a case relied upon by the defendant in support of his contention, is not in point. There the question was whether a federal court would take judicial notice of the law of a foreign country or it should be proved as a fact.

[2] The defendant also complains of the refusal of the court to give the following instructions:

(1) "The defendant had the right to assume as he drove down the state highway that the plaintiff would continue in the direction he was going until and unless the latter gave reasonable notice of his going in another direction."

(2) "The defendant had the right to assume that the plaintiff, who was, when first observed by the defendant, walking in a place secure from injury, would continue to exercise ordinary care, not only in crossing, but in continuing on his way."

Both of these requests were properly denied. They assumed, contrary to the evidence in the case, that the plaintiff, if he had continued on his way walking beside the car track, would have been in a place of safety, that he did not seasonably indicate his intention to change his course, and that he was not in the exercise of ordinary care in attempting to cross to the east side of the street at a time when, as he observed, the defendant was from 250 to 300 feet back of him, and, as the defendant testified, from 100 to 300 feet. As the requests were not applicable to the facts as presented by the evidence, and would have tended to mislead and confuse the jury, the court did not err in declining to give them.

[3, 4] Furthermore, the jury were properly instructed. The court charged them, in substance, that the plaintiff and the defendant had equal rights in the use of the street, and each, in the exercise of his rights, was bound to use ordinary care with reference to the other.

The judgment of the District Court is affirmed, and the defendant in error recovers his costs on appeal.

(217 Fed. 240)

CACHE CREEK MINING CO. v. BRAHENBERG.

(Circuit Court of Appeals, Ninth Circuit. October 13, 1914.)

No. 2387.

1. MINES AND MINERALS (§ 38*)—FORFEITURE OF CLAIM—PLEADING.

Where, in a suit to determine an adverse claim to a mining location, defendant answered, admitting plaintiff's location as alleged, but denied that plaintiff since 1909 had performed the annual assessment work required by law to hold the claim, and alleged that by reason thereof it became forfeited, and reverted to the public domain. *Held* that, in the absence of objection at the trial, the allegations of the answer were sufficient to support a plea of forfeiture.

[Ed. Note.—For other cases, see Mines and Minerals, Cent. Dig. §§ 87½–113; Dec. Dig. § 38.*]

2. APPEAL AND ERROR (§ 1056*)—REVIEW—RULINGS ON EVIDENCE—PREJUDICE.

Where, on an issue as to whether plaintiff's work on a mining claim had been sufficient, the court gave careful instructions touching the amount of labor necessary to be done, and how the jury should ascertain and determine the value of such that was done, the admission of evidence of the opinion of a workman as to the value of the work, with which he was personally familiar, was not prejudicial to plaintiff, though not fully qualified as an expert.

[Ed. Note.—For other cases, see Appeal and Error, Cent. Dig. §§ 4187–4193, 4207; Dec. Dig. § 1056.*]

In Error to the District Court of the United States for the Third Division of the Territory of Alaska; Robert W. Jennings, Judge.

Action by the Cache Creek Mining Company against Henry Brahenberg. Judgment for defendant, and plaintiff brings error. Affirmed.

The complaint in this case (plaintiff in error being the plaintiff below) in brief shows that on July 28, 1905, one Joseph Anderson located claim No. 1 above on Dollar creek, in the district of Alaska, stating the manner of loca-

*For other cases see same topic & § NUMBER in Dec. & Am. Digs. 1907 to date, & Rep'r Indexes

tion, and that for a valuable consideration Anderson thereafter sold, transferred, and set over the said claim to plaintiff; that plaintiff has since been entitled to the possession of said claim, and has in each year done and performed the full and requisite amount of assessment and development work for holding it under existing law; but that in the year 1912 the defendant did trespass thereon, and unlawfully, wrongfully, and without right take possession thereof from plaintiff, and so wrongfully withholds the same from plaintiff, to its damage in the sum of $5,000. Judgment for possession and for the damages alleged is prayed. The answer of defendant admits the location by plaintiff as alleged, but denies that plaintiff has, since the year 1909, performed the annual labor required by law to hold said claim, or any labor thereon, and alleges that by reason thereof the claim became forfeited, and reverted to the public domain. The answer further sets up location by the defendant in August, 1912, his entry into possession, and claim of right thereunder. The cause was tried by a jury, and verdict and judgment resulted for defendant.

John Lyons, of Valdez, Alaska, James E. Fenton, of San Francisco, Cal., and William A. Gilmore, of Nome, Alaska, for plaintiff in error.

T. C. West, of San Francisco, Cal., and E. E. Ritchie, of Valdez, Alaska, for defendant in error.

Before GILBERT and ROSS, Circuit Judges, and WOLVERTON, District Judge.

WOLVERTON, District Judge (after stating the facts as above). But two assignments of error are relied upon in the briefs of counsel for plaintiff in error for a reversal of the cause. These are:

First, the validity of plaintiff's location being admitted by the answer, it was incumbent upon the defendant to plead forfeiture of the claim through failure to do the proper annual assessment work, and that this the defendant has not sufficiently done; and,

Second, the admission of certain testimony of the witness Rimmer over objections and exceptions.

[1] As to the first assignment, it must be conceded that the allegations setting up forfeiture are meager, but they do state that "all of plaintiff's right to and in said claim became forfeited, and the said claim and all of it became a part of the public domain, subject to location according to law as mineral land, long prior to the year 1912," and this in conjunction with a denial that plaintiff has performed the annual labor required by law to hold said claim since the year 1909, or that it has performed any labor upon said claim subsequent to that date. A trial was had upon practically the sole issue as to whether plaintiff had performed the requisite annual labor for holding the claim, and whether by reason of a failure in that respect it had suffered a forfeiture, and the concrete question was concisely submitted to the jury by clear instructions for their finding. No objection, so far as the record shows, was ever interposed or made to the sufficiency of the pleading until upon this appeal, and the question now is whether in the light of the record, judgment having been entered upon the verdict, the allegations of the answer are sufficient to support a plea of forfeiture.

A forfeiture must be set up before it can be insisted upon. Bishop v. Baisley, 28 Or. 119, 41 Pac. 936. This the defendant attempted to do, and meagerly and imperfectly stated his defense. The result is an imperfect statement of a good defense. Such a statement, it has gen-

erally been held, is sufficient to support the verdict and judgment. The rule has been stated thus:

"A defect in a pleading, whether of substance or form, which would have been fatal on demurrer, is cured by verdict, if the issue joined be such as necessarily required, on the trial, proof of the facts defectively stated or omitted, and without which it is not to be presumed that either the judge would direct the jury to give, or that the jury would have given, the verdict." Houghton & Palmer v. Beck, 9 Or. 325.

See, also, Booth v. Moody, 30 Or. 222, 225, 46 Pac. 884.

The pleading in the case at bar, in the light of the rule, must be held to be sufficient.

[2] Referring to the second assignment, the witness Rimmer was permitted to give his estimate as to what certain work was worth, shown by the plaintiff to have been done as assessment work. His testimony, so far as is necessary to illustrate the situation is as follows:

"In September, 1911, I was working about a mile or a little over from there mining. I afterwards saw the work that was done there. It was just plowing, scraping, preliminary work, about 1,400 feet long. The going rate of wages in that district at that time was $5 a day and board. I don't know what horses were worth up there. Q. Are you familiar with the country there along Dollar creek; that is, the character of the ground? A. Yes, sir. Q. Do you know about how much work it takes to move such dirt as was removed by the Cache Creek Mining Company there? A. I think I do. Q. What would you say that work is worth? By the Court: What is that work worth, done the way the plaintiff says he did it—not what is it worth done some other way? A. Why, I think about $150 would be a liberal allowance for that kind of work in the ditch."

The real objection is that it was not proper for Rimmer to give his opinion touching the value of the work done. He was probably not fully qualified to testify as an expert, yet he had the general knowledge that most workmen about mines have touching the value of assessment work. The court gave careful instructions touching the amount of labor necessary to be done, and as to how the jury should ascertain and determine the value of such as was done, and in view of this fact we are strongly impressed that no reversible error was committed in allowing Rimmer's testimony to go to the jury. If error at all, it was harmless.

Other questions were discussed, and are suggested in the brief of counsel; but they are not presented by the record, and cannot be considered.

Judgment affirmed.

(217 Fed. 321)

LEWIS, LEONHARDT & CO. v. SOUTHERN RY. CO.

(Circuit Court of Appeals, Sixth Circuit. October 16, 1914.)

No. 2466.

1. CARRIERS (§ 32*) — MILLING IN TRANSIT — THROUGH RATES — DISCRIMINATION—REBATES.

Complainant at Knoxville manufactured a saccharine feed consisting of 50 per cent. oats and corn, 26 per cent. molasses, 10 per cent. cotton seed meal, 10 per cent. corn shive, and 4 per cent. salt. The corn and oats were shipped from points north of the Ohio river through Cincinnati and Louisville, and the other ingredients, except the salt, from points in the South. The feed was shipped from Knoxville to points east and south, and by an agreement with defendant complainant was allowed a milling in transit privilege, by which the feed was shipped out on the through rates applying to the corn and oats. Since these grains composed only half of the feed, complainant at first was compelled to sell locally one-half of the corn and oats shipped in, but, this being inconvenient, it was later arranged that complainant should be permitted to ship out double the quantity of feed as compared with the corn and oats shipped in. Complainant paid the inbound local rates on the articles entering into the product and the outbound proportional rates on the feed and, under arbitrary calculations, was afterwards reimbursed in the form of refunds on the hypothesis that the ingredients were all transit articles like the corn and oats, and so entitled, when milled, to the transit rate. *Held*, that such agreement violated Interstate Commerce Act (Act Feb. 4, 1887, c. 104, 24 Stat. 379 [U. S. Comp. St. 1913, § 8564]) § 2, prohibiting rebates, sections 6, 10, as amended by Act March 12, 1889, c. 382, §§ 1, 2, 25 Stat. 855, 856 (sections 8569, 8574), forbidding the collection or receipt of less compensation for transportation of property than is specified in published schedules of rates, and Elkins Act Feb. 19, 1903, c. 708, 32 Stat. 847 (sections 8597–8599), prohibiting concessions, rebates, etc.

[Ed. Note.—For other cases, see Carriers, Cent. Dig. §§ 83–85; Dec. Dig. § 32.*]

2. CARRIERS (§ 35*)—INTERSTATE COMMERCE—ILLEGALITY OF CONTRACT—ACTION FOR DAMAGES.

Where a contract between a shipper and a carrier for a milling in transit privilege was illegal as violative of the Interstate Commerce Act, and the illegal portion was alone sufficient to vitiate the whole contract, complainant could not recover damages for its breach.

[Ed. Note.—For other cases, see Carriers, Cent. Dig. § 94; Dec. Dig. § 35.*]

In Error to the District Court of the United States for the Eastern District of Tennessee; Edward T. Sanford, Judge.

Action by Lewis, Leonhardt & Co. against the Southern Railway Company. Judgment for defendant, and plaintiff brings error. Affirmed.

G. W. Pickle, of Knoxville, Tenn., for plaintiffs in error.

Leon Jourolmon, of Knoxville, Tenn., and C. B. Northrop, of Washington, D. C., for defendant in error.

Before WARRINGTON and DENISON, Circuit Judges, and TUTTLE, District Judge.

WARRINGTON, Circuit Judge. This was an action to recover damages ($100,000) for breach of a contract, set out in the first and

*For other cases see same topic & § NUMBER in Dec. & Am. Digs. 1907 to date, & Rep'r Indexes

third counts of the declaration. The contract in each of the forms alleged concerned a milling in transit arrangement, entered into by the parties in 1901, and in one form or another observed until 1907, when the ultimate breach complained of occurred. At the close of plaintiff's evidence a motion to direct a verdict in favor of defendant was allowed, and plaintiffs bring error.

[1] Prior to and in 1901 the plaintiffs were engaged in the business of selling hay, grain, and feed, at Knoxville, and in December of that year they added to their business the manufacture and sale of dairy feed, called "Saccharine Feed." The contract is alleged to have been made through letters, schedules, and documents appearing in the record, and in substance to have been this: That plaintiffs should establish a manufacturing plant at Knoxville, and pay upon the raw material shipped to and manufactured at the plant and upon the feed shipped out no greater rate than the established through rate on the product from the point of original shipment of raw material to the point of sale and delivery of the feed; that for every 50 pounds of oats and corn, or corn products, shipped to Knoxville and there milled as part of the feed, the plaintiffs should have the right to ship over defendant's lines to ultimate destinations 100 pounds of the product, or in like ratio or proportion; and that defendant for a short season complied with the contract, and issued and published its tariff and rate sheets accordingly. The provision stating the relation in quantities between raw material shipped in and finished product shipped out, is called in the evidence a "two for one" arrangement; this provision appears in the first count, but not in the third, and constitutes the main difference between the counts; and, while it is said to have originated with the railroad and to have been forced on plaintiffs, it was acquiesced in too long by all parties to escape the effect of the rule touching the practical construction of contracts. It was further alleged that the arrangement was to be continued so long as the privilege of milling in transit was granted to other persons at Knoxville. The saccharine feed, according to schedules filed by defendant, consisted of ingredients and in proportions: corn 35 per cent., oats 15 per cent., molasses 26 per cent., cotton seed meal 10 per cent., corn shive 10 per cent., salt 4 per cent. An article known as marsden feed, which is described as "composed of the entire stalk of corn, blade and shuck" except the pith of the stalk, was for a time used in the mixture in question, but was changed in name to that of "corn shive" at the instance of the railroad; and later rice chaff was used in place of corn shive.

It will be observed that oats and corn constituted 50 per cent., and that the remaining articles made up the other 50 per cent. of the ingredients entering into the feed. The oats and corn so used at Knoxville, were shipped from points north of the Ohio river through Cincinnati and Louisville. The other ingredients were shipped into Knoxville generally from the following places: Molasses and rice chaff from New Orleans, cotton seed meal from Memphis, and salt from Cincinnati. While the feed was shipped from Knoxville to many points east and south of that city, it was stipulated by the parties that what was true in respect of such shipments from Knoxville out is suffi-

ciently illustrated by the facts in relation to shipments from Knoxville to Norfolk and Richmond. Thus Knoxville was the transit point within the territory indicated by the points of origin of the articles used in the milling process and the destinations of the product into which they were converted.

The local rates into Knoxville and out and the through rates upon the articles entering into the composition, as also the through rate applied to the product, and the use and application made of some of these rates, during the period in question, will serve to explain the operation and effect and the true intent of the contract in dispute. For present purposes it is enough to refer to the rates mentioned in the margin.[1] There are two methods of practical performance of the contract shown in the record. For a time prior to the "two for one" arrangement the plaintiffs shipped into Knoxville double the quantity of oats and corn used in any given quantity of feed shipped out. Of the oats and corn so shipped in, one half was sold locally and the other half, with an equal quantity of the other articles, was used in making the feed. When the product was shipped out, it was treated as equal to the total quantity of oats and corn shipped in, and so entitled to the through rate that would have been chargeable upon the product if it had moved from Cincinnati or Louisville to Norfolk or Richmond. This plan was apparently adopted as a basis for shipping out feed equal in quantity to that of the oats and corn shipped in. The plaintiffs complained of the plan because it imposed upon them the trouble of selling one-half the oats and corn locally, and unnecessarily complicated the accounts of both parties, as also the settlements of freight charges. The plan was abandoned and the two for one arrangement substituted as an "equivalent." The latter arrangement did not require shipping in more oats and corn than were needed in making the feed; thereafter, if not before, the molasses, rice chaff, cotton seed meal, and salt were in effect, though not in name, given the benefits of the privilege of milling in transit regardless of the differences in points of origin between these articles themselves and between such

[1] The local rate (per 100 lbs.) on oats or corn in car loads from either Cincinnati or Louisville to Knoxville was 19 cents, the through rate on corn or oats, as also on feed, from either of the first two cities named to Norfolk or Richmond in car loads was 12 cents per 100 pounds, and the local proportional rates allowed plaintiffs on their feed from Knoxville out, were 8 cents to Norfolk and 6.9 cents to Richmond (and these rates appear in the testimony of plaintiffs' principal witness and were used in the freight settlements, though they are not shown to have been set out in any published tariff), while the published tariff rate between the same cities on feed in either car loads, or less than car loads, was 27 cents. The local rates per 100 pounds in car loads into Knoxville on the other articles entering into the feed were: Molasses and rice chaff from New Orleans 25 cents and 20 cents, respectively; cotton seed meal from Memphis 13 cents; salt from Cincinnati 13 cents; and the through rates on these last-named articles from their several initial points to Norfolk or Richmond were, in the order just mentioned, 26 cents, 26 cents, 25 cents, and 18.5 cents. The through rates on feed (in 1901 to 1904) from Memphis to Norfolk or Richmond were 35 cents and 59 cents, and thereafter 29 cents and 41½ cents, respectively, in car loads and less than car loads; and the rates on saccharine dairy feed from New Orleans to Norfolk and Richmond were (in 1901 to 1905) 37 cents and (after March, 1905) 26 cents, respectively, in either car loads or less than car loads.

points (except as to the salt) and those of the oats and corn; and after the ingredients including oats and corn, were assembled and milled at Knoxville, the product was still treated as entitled to the through rate the same as it had been under the first plan.

It cannot escape notice that under the applicable rate classification none of the articles comprised in plaintiffs' saccharine feed was "feed" when shipped into Knoxville; and that the through rate on feed between Cincinnati or Louisville and Norfolk or Richmond was lower than the through rate on any of the ingredients entering into plaintiff's mixture except oats and corn. True, there was a through rate alike on feed from Memphis and saccharine dairy feed from New Orleans, both to Norfolk and Richmond; but no milling in transit privilege concerning feeds or their ingredients originating at such points was shown, and, in short, they were not made transit articles at all. Hence, as regards the milling in transit privilege in question, we may safely eliminate feed originating at Memphis or saccharine dairy feed at New Orleans and, as respects transit articles, confine our attention to feed and oats or corn originating at Cincinnati or Louisville. It will be recalled that the through rate on feed from Cincinnati or Louisville to Norfolk or Richmond was 12 cents; and the plaintiff, Lewis, testified, in respect of plaintiffs' milling in transit privilege and of this rate, that "all in excess of 12 cents is the shipper's money when the transaction is completed."

The controlling question thus arises whether the contract relied on could be lawfully made. The insistence for plaintiffs in substance is: The contract related only to the milling in transit privilege and not to rates; it was entered into before the enactment of the Hepburn law, was not until the passage of that act within the jurisdiction of the Interstate Commerce Commission, and so the parties were at liberty to make such nonexclusive arrangement as they saw fit; and since the privilege was similar to other milling privileges given by defendant in Knoxville, the only course open to the railroad was either to withdraw all such privileges, including plaintiffs', or simply to introduce new rates. It is enough to say of "similar privileges" at Knoxville that no other privilege like the one now in issue was shown. The argument that this contract had no relation to rates cannot be sustained. The essential object of the usual milling in transit privilege is to enable shippers to employ a method of transit which, but for the privilege, would subject the material to local rates instead of entitling it to an ultimate through rate. The through rate is applied later upon the theory and the condition that stoppage at the transit point was for some legitimate treatment of the material, and that the continuation of the transit desired is of the same material, its product or equivalent, to a through rate destination. See In re Substitution of Tonnage at Transit Points, 18 Interst. Com. Com'n R. 280, 284. Thus the object at last is to escape local rates and secure a through rate; indeed, apart from this object a milling in transit privilege would have no reason to exist. The privilege of course enters into the cost of transportation, and so in effect is part of the contract for through shipment; this is ordinarily covered by the rate; and such is the theory upon which the privilege is required to be specified in the pub-

lished tariff. Unlawful Rates on Trans. Cotton by K. C. M. & B. R. R., 8 Interst. Com. Com'n R. 121, 135, opinion by Commissioner Prouty in 1899; and see Shiel & Co. v. Ill. Cent. R. R. Co., 12 Interst. Com. Com'n R. 210, 215, decided in 1907. True, the privilege may involve more service and expense (such as excessive switching and detention of cars and the like at the transit point) than the carrier can afford to undertake for the rate; in that event an additional reasonable charge may be imposed (Southern Ry. Co. v. St. Louis Hay Co., 214 U. S. 297, 301, 29 Sup. Ct. 678, 53 L. Ed. 1004), but this does not change the real nature and effect of the privilege. The integrity alike of the local rates and the through rate is manifestly dependent upon the nature of the privilege, as well as its observance. And if the privilege now in issue, either in terms or as it was practically understood and interpreted by the parties, failed to protect these rates, it was, as we shall see, quite as certainly violative of the law before the passage of the Hepburn Act as it was after; but it is to be observed that the right in Congress (and its right is conceded) to empower the Interstate Commerce Commission to regulate such privileges, logically leads to the conclusion that the power of the railroad in respect of the privileges is in its nature a continuing power and similar in character to the rate-making power, and the free and proper exercise of such power cannot be fettered by contract. Armour Packing Co. v. United States, 209 U. S. 66, 82, 28 Sup. Ct. 428, 52 L. Ed. 681; Louisville & Nashville R. R. v. Mottley, 219 U. S. 468, 482, 31 Sup. Ct. 265, 55 L. Ed. 297, 34 L. R. A. (N. S) 671. There can be no difference at bottom between the right directly to change or withdraw a rate and the right indirectly to do the same thing through alteration or withdrawal of a milling in transit privilege.

Furthermore, plaintiffs' argument fails to give due weight to the effect upon the rates, which resulted from shipping the ingredients of the feed from the different sources stated into the transit point and then shipping the feed out under a through rate which was not in terms applicable to substantial portions of the feed; in other words, the through rate on "feed" was evidently made in contemplation of the movement of materials shipped into the transit point from sources corresponding with those indicated by the rate itself. See opinion of Commissioner Clements in Shiel & Co. v. Ill. Cent. R. R. Co., supra, 12 Interst. Com. Com'n R., at page 215. This effect of the contract upon the rates became apparent the moment it was shown that the molasses, rice chaff and cotton seed meal were shipped to Knoxville from New Orleans and Memphis instead of Cincinnati or Louisville. We have seen that under the first method resorted to in performance of the contract the basis for each shipment of finished product out was the shipment in of a quantity of oats and corn equal to the total quantity of product shipped out, and that one-half the oats and corn was sold locally and the ingredients other than oats and corn entering into the product were substituted. This method treated the oats and corn disposed of locally the same as if they had been used in making the outgoing product, and the application of a through rate upon that theory was clearly opposed to the ruling of this court in Grand Rapids

& I. Ry. Co. v. United States, 212 Fed. 577, 585, 129 C. C. A. 113, and in Nichols & Cox Lumber Co. v. United States, 212 Fed. 588, 591, 592, 129 C. C. A. 124. That method was abandoned in July, 1904, and the "two for one" plan substituted as stated. This did not relieve the situation; the effect remained practically the same as before. The vice of the privilege was that the local rates and the through rate were not, and, consistently with the contract, could not be protected. The Interstate Commerce Commission dealt with the subject to some extent in Re Substitution of Tonnage at Transit Points, supra, 18 Interst. Com. Com'n R., at pages 284, 292. On the latter page it is said:

"The maker of mixed feed mills together a number of grains and sometimes cotton seed meal and molasses, producing what is practically a new commodity from various substances, some received upon transit rates and others secured either locally or upon nontransit rates. The present practice at many points is to forward cars of the mixture thus produced upon the transit of solid cars of grain. What has been said above regarding the blending of wheat by millers, and regarding the forwarding of mixed cars, and also regarding the substitution of the local supply for transit tonnage consumed locally, fully indicates the position of the Commission regarding this question of mixed feed. We are convinced that great abuses exist in shipments of this character, but they do not seem to be other than a combination of the abuses separately discussed above. Regarding this matter of the forwarding of mixed feed, it is proper to suggest that there must be a limit to the application of the transit practice, and this limit must be reached when there is such a process of manufacture and such a loss of identity of the inbound commodity that the shipment forwarded may be said to be a new creation. Some of the mixed feeds brought to our attention appear to be beyond the fair limits of a transit practice."

We are disposed to believe that the contract and its practical execution in the instant case contravened the acts of Congress concerning rebates, drawbacks, or other devices, as declared by section 2 of the act to regulate commerce (24 Stat. L. 379), forbidding the collection or receipt of less compensation for transportation of property than is specified in published schedules of rates, as prescribed by sections 6 and 10 of the act as amended March 12, 1889 (25 Stat. L. 855, 856), and also prohibiting rebates, concessions, or discrimination in respect of the transportation of property "whereby any * * * property shall by any device whatever be transported at a less rate than that named in the tariff published and filed by such carrier," as provided in the Elkins Act of February 19, 1903 (32 Stat. L., pt. 1, p. 847).

We shall gain a clearer view of the effect of this statutory policy upon the contract if in the light of the facts already pointed out we consider the methods of settlement, including the system of refunds, adopted, when applying the transit rate (i. e., the 12 cent through rate) to the feed. The plaintiffs paid the inbound local rates on the articles entering into the product and the outbound proportional rates on the product itself, and under purely arbitrary calculations were afterwards reimbursed, in the form of refunds, upon the hypothesis that the ingredients were all transit articles, like the oats and corn, and so entitled, when milled, to the transit rate. Judge Sanford found that the settlements were made by—

"calculating the milling in transit refund on one-half of the ingredients from their points of origin and then doubling the amount of this refund on the

theory that it represents approximately the milling in transit refund on the other one-half of the ingredients from their points of origin."

We understand this to mean, and the practical construction of the contract to have been, that such calculations were made with respect to the local rates on inbound shipments of oats and corn and the proportional rates on outbound shipments of product. This would seem to have been also in accord with the practical construction placed by the parties on the schedules (or circulars, as they are called in the record), which were filed with the Interstate Commerce Commission. It must be said that these circulars are ambiguous and difficult to understand, which augments the binding force of the interpretation placed on them by the parties in their performance of the contract. The substance and effect of the circulars are, we think, sufficiently shown in the margin.[2]

Under the method of settlement before mentioned the oats and corn were alone treated as transit articles and as constituting the entire product; but obviously this ignored the fact that 46 per cent. of the product (excluding the 4 per cent. of salt derived from Cincinnati) was composed of articles that were not shipped in from initial points corresponding with those of the oats and corn, and so were not open to treatment either as transit articles or as entitled to the transit rate. We say this notwithstanding the fact that the constituent elements of the feed are given in the circulars; for, as before shown, these ingredients (except corn and oats) were not made transit articles by any transit privilege, and we need not say again they were never in terms so regarded by the parties themselves. When we consider then the volume of plaintiffs' business, as indicated by the evidence, and the excess of the inbound local rates on molasses and rice chaff over the inbound local rate on oats and corn, it is manifest that the method inured to the substantial advantage of the plaintiffs; and it is equally plain that plaintiffs received in every settlement, under the guise of

[2] We find eight of these circulars in the record. All of them permit "oats and corn" to be shipped "from or through Louisville * * * or Cincinnati * * * to Knoxville * * * milled into dairy or saccharine feed and reshipped" to points named.

Paragraph 3: "For every 35 pounds of corn and 15 pounds of oats received at mill, 100 pounds of dairy or saccharine feed may be shipped out."

Paragraph 5: "Shipments of corn and oats to be milled in transit shall be billed at full tariff rate from point of origin to milling point."

After stating the percentages of the several ingredients entering into the feed, as set out in the opinion, it is provided that "expense bills for corn and oats only will be honored in milling in transit arrangement to the extent shown in paragraph 3."

After providing time limits as to expense bills, paragraph 9 of one of the circulars (relied on in plaintiffs' brief) is as follows: "When the conditions of the rules of this circular have been fully complied with, there will be due the miller at Knoxville, Tenn., refunds as follows: The excess over the sum of the rates paid on the corn and oats from point of origin into the mill and the dairy or saccharine feed out of the mill. And the rate (class D) on the dairy or saccharine feed reshipped from point of origin of the corn or oats to ultimate destination of the milled product as published in Southern Railway Southeastern Tariffs, or as amended by supplements or subsequent issues."

(We take it that the portion of this ninth paragraph, which succeeds the words "refunds as follows," was meant to be a single sentence.)

milling in transit refunds, distinct portions of the inbound local rates which they had previously paid on at least 46 per cent. of the non-transit tonnage of their output, and so obtained rates thereon less than the applicable published tariffs; and the statutes are too plain and the decisions too numerous and clear to justify elaboration in showing that every such refund was in material part a rebate. Armour Packing Co. v. United States, 209 U. S. 56, 71, 80, 81, 28 Sup. Ct. 428, 52 L. Ed. 681; N. Y., N. H. & Hartford R. R. Co. v. Interstate Commerce Commission, 200 U. S. 361, 391, 392, 26 Sup. Ct. 272, 50 L. Ed. 515; United States v. Union Stockyard, 226 U. S. 286, 308, 33 Sup. Ct. 83, 57 L. Ed. 226; Kansas City So. Ry. v. Albers' Comm. Co., 223 U. S. 573, 596, 32 Sup. Ct. 316, 56 L. Ed. 556; Chicago & A. Ry. Co. v. United States, 156 Fed. 558, 562, 84 C. C. A. 324, 26 L. R. A. (N. S.) 551 (C. C. A., Seventh Circuit); Cleveland, C., C. & St. L. Ry. Co. v. Hirsch, 204 Fed. 849, 852, 853, 123 C. C. A. 145, and citations (C. C. A., Sixth Circuit). It follows that filing the circulars with the Interstate Commerce Commission respecting such a milling in transit privilege was futile. The railroad company had no power to grant and the plaintiffs no right to receive such a privilege.

[2] Plaintiffs are now seeking recognition and enforcement of the contract through recovery of damages for its alleged breach. The illegal portion pointed out was alone sufficient to vitiate the whole contract and prevent its enforcement. Cleveland, C., C. & St. L. Ry. v. Hirsch, supra, 204 Fed. at pages 853, 854, 123 C. C. A. 145, and citations. We need not pass upon the other questions presented, although we have fully considered them.

The judgment must be affirmed with costs.

(217 Fed. 328)

BUSCH et al. v. STROMBERG-CARLSON TELEPHONE MFG. CO.

(Circuit Court of Appeals, Eighth Circuit. October 12, 1914.)

(Syllabus by the Court.)

1. APPEAL AND ERROR (§ 1011*)—DECISIONS REVIEWABLE—CONFLICTING EVIDENCE.

The decisions of questions of fact upon the weight of conflicting evidence in the trial of an action at law without a jury are not reviewable in the national courts.

[Ed. Note.—For other cases, see Appeal and Error, Cent. Dig. §§ 3983-3989; Dec. Dig. § 1011.*]

2. CORPORATIONS (§ 472*)—SUBSCRIPTION AGREEMENT—CONSTRUCTION—ACTION AGAINST SUBSCRIBER—DEFENSE—"UNDERWRITING."

An agreement whereby each of 56 subscribers covenants with the others, with a corporation, and with its manager, to sell at par or to take and pay at that rate for the amount of bonds of the corporation maturing 20 years later set opposite his name, in consideration of the covenants in such agreement of the corporation and its manager to sell and deliver to him or to others that amount of bonds at that rate and to pay him 5 per cent. commission in cash and 40 per cent. in full-paid unassessable stock of the corporation for selling or purchasing the subscribed bonds, is an "underwriting," a contract to insure the sale of the bonds at par, and, if they are not sold, to buy them at that price, and not a mere contract

*For other cases see same topic & § NUMBER in Dec. & Am. Digs. 1907 to date, & Rep'r Indexes

to make a loan to the corporation. Neither the subsequent insolvency of the corporation nor the subsequent depreciation or worthlessness of the bonds and the stock constitutes any defense to an action against a subscriber for his breach of his agreement.

[Ed. Note.—For other cases, see Corporations, Cent. Dig. §§ 1837, 1839, 1841; Dec. Dig. § 472.*

For other definitions, see Words and Phrases, Second Series, Underwritten.]

3. CONTRACTS (§ 303*)—INDEPENDENT COVENANTS—BREACH.

Where acts are stipulated to be done at specified times by one covenant of a contract, and acts are stipulated to be done without fixing any time for their performance by another covenant thereof, the latter covenant does not condition the former, is independent of it, and a breach of the latter constitutes no defense to an action for a breach of the former.

The same rule generally governs where acts are stipulated by one covenant to be done at different times from those fixed by another covenant for the performance of other acts.

[Ed. Note.—For other cases, see Contracts, Cent. Dig. §§ 1409–1443; Dec. Dig. § 303.*]

4. CORPORATIONS (§ 472*)—UNDERWRITING—ACTION FOR BREACH—DEFENSE—BREACH OF INDEPENDENT COVENANT.

The subscribers agreed to take and pay for the bonds at times specified in the underwriting, if not sold to others before that time. Just before the defendant signed the underwriting, the corporation, at the demand of the defendant and other St. Louis directors, agreed to build a plant at St. Louis costing about $1,000,000, and the defendant thereupon raised his subscription from $50,000 to $100,000. This agreement fixed no time for the erection of the plant, and was neither embodied nor referred to in the underwriting and the plant was never built.

Held, these facts constituted no defense to an action against the defendant for a breach of his contract to sell or take and pay for the bonds at the agreed times.

[Ed. Note.—For other cases, see Corporations, Cent. Dig. §§ 1837, 1839, 1841; Dec. Dig. § 472.*]

5. ASSIGNMENTS (§ 18*)—UNDERWRITING—ASSIGNABILITY.

An underwriting is assignable.

[Ed. Note.—For other cases, see Assignments, Cent. Dig. §§ 25–27; Dec. Dig. § 18.*]

6. CORPORATIONS (§ 472*)—BREACH OF UNDERWRITING—MEASURE OF DAMAGES.

The measure of damages for the breach by a subscriber of his contract of underwriting is the difference between the price at which he agreed to insure the sale or to purchase the securities and their value.

[Ed. Note.—For other cases, see Corporations, Cent. Dig. §§ 1837, 1839, 1841; Dec. Dig. § 472.*]

Carland, Circuit Judge, dissenting from conclusion reached.

In Error to the District Court of the United States for the Eastern District of Missouri; David P. Dyer, Judge.

Action by the Stromberg-Carlson Telephone Manufacturing Company against Adolphus Busch and others. Judgment against Adolphus Busch, and Lillie Busch and others, executors, etc., bring error. Reversed and remanded with directions to grant new trial.

Franklin Ferriss, of St. Louis, Mo. (Allen C. Orrick, of St. Louis, Mo., on the brief), for plaintiffs in error.

Irvin V. Barth, of St. Louis, Mo. (Warwick Hough and Warwick M. Hough, both of St. Louis, Mo., and Hubbell, Taylor, Goodwin & Moser, of Rochester, N. Y., on the brief), for defendant in error.

*For other cases see same topic & § NUMBER in Dec. & Am. Digs. 1907 to date, & Rep'r Indexes

Before SANBORN and CARLAND, Circuit Judges, and REED, District Judge.

SANBORN, Circuit Judge. [1] The complaint of the plaintiffs in error is that a judgment was rendered against Adolphus Busch, the defendant below, for $27,636.67, because he failed to pay the last installment of $20,000 of his subscription of $100,000 to an underwriting contract for the bonds of the United States Independent Telephone Company, a corporation. A jury was waived, and at the request of both parties the court made a special finding of the facts in this case. Exceptions were taken to some of the findings, and to some failures to find as requested, but an examination of the record has convinced that there was substantial evidence to sustain the findings made, and that the evidence in support of the material findings requested and refused was not conclusive; so these exceptions are here dismissed. The decisions of a court in the trial of an action at law without a jury upon the weight of conflicting evidence are not reviewable in the national courts. Gibson v. Luther, 196 Fed. 203, 204, 116 C. C. A. 35, 36.

[2, 4] The defendant was one of the directors of the telephone company and the first of about 56 subscribers to sign the underwriting. This contract was made on November 23, 1895. By it Mr. Busch subscribed for $100,000 at par value of the bonds of the telephone company, which were secured by the pledge of personal property under a collateral trust agreement, and agreed to pay the amount of this subscription in five equal installments on February 1, 1906, May 1, 1906, August 1, 1906, November 1, 1906 and February 1, 1907, respectively. He paid the first four installments and took $80,000 of the bonds, which were dated October 2, 1905, and were to mature October 1, 1935, and $32,000 at par full-paid, nonassessable stock of the company; but when the last installment of his subscription fell due, the company, which had been prosperous and promising when he made his subscription, had become insolvent, and he declined to pay it.

The main contention of counsel for the plaintiffs in error is that the underwriting agreement is a mere executory contract to loan money to the telephone company, and not an agreement to insure the sale of or to purchase its bonds, and that there can be no lawful recovery for the breach of such a contract by a subscriber: (1) Because an action for specific performance will not lie; (2) because the breach causes no damage, for the agreement to repay the loan offsets the contract to make it; (3) because no recovery can be had for a refusal to advance money on overdue bonds; and (4) because the insolvency of the company and the worthlessness of the bonds releases from the previous obligation to loan to it.

Conceding, without admitting that this might be the result if the underwriting were a mere contract to loan money, let us see if it was such an agreement. It is entitled "Underwriting Agreement." It recites that the telephone company has authorized the issue and the securing of the payment of its bonds, that it has sold or agreed to sell a part of them, that it desires to sell an additional $2,500,000 thereof to finance its future business "and to secure the underwriting of said $2,500,000 bonds or such portion thereof as it shall not sell," and that the

manager has acquired $1,000,000 of the stock of the telephone company (which the record shows had been previously acquired and donated to him by stockholders), and that the company has requested him to act as its agent to sell the $2,500,000 bonds at par with 40 per cent. of the amount thereof in stock or voting trust certificates representing the same. It contains these covenants: "Each underwriter agrees * * * with the manager and every other underwriter that he will take up and pay for at par and accrued interest to the date of delivery" the amount of bonds set opposite his signature. The telephone company covenants that the manager, at any time before the $2,500,000 bonds are taken up and paid for by the underwriters, may sell them at par and accrued interest, and that if he so sells them to others than the underwriters they shall be deemed to have been taken up and paid for by the underwriters and shall be credited to them pro rata. The manager covenants that, as each underwriter takes up and pays for all of said bonds underwritten by him, for each $1,000 par value of bonds taken up and paid for or deemed to have been taken up and paid for and credited to such underwriter, he will deliver to such underwriter $400 par value full-paid and nonassessable stock of the telephone company or a voting trust certificate representing such stock, and that he will pay such underwriter a commission of 5 per cent. in cash upon the sale of each of said bonds when all of the bonds underwritten by such underwriter have been taken up or sold.

This contract is in terms and in legal effect far more than an agreement to loan money to the telephone company. It is an agreement by the subscribers to insure the sale of the bonds subscribed at par, and if they are not so sold to others then to purchase and pay for them at par, in consideration of the covenants of the telephone company and the manager to deliver the bonds and to pay the subscribers for selling or purchasing them 5 per cent. commission in cash and 40 per cent. in full-paid nonassessable stock of the telephone company. It is a contract to insure the sale of the bonds subscribed, and, in case they are not sold before the installments fall due, then to purchase and pay for them at par. It is an underwriting, and not an agreement to loan money. Moreover, it is an entire contract, complete in itself, and the covenants of the telephone company and the manager furnish a valuable and sufficient consideration for those of the subscribers. It is, therefore, no defense to an action against one of the subscribers for his breach of his contract that the telephone company became insolvent and the bonds worthless after he made his contract; much less is it a defense to a subscriber who, like Mr. Busch, has performed four-fifths of his undertaking and received four-fifths of its fruits. Peck Colorado Co. v. Stratton (C. C.) 95 Fed. 741; Otis v. Cullum, Receiver, 92 U. S. 447, 23 L. Ed. 496.

The subscribers might have provided in their agreement that they should be released from their undertaking in case the company became insolvent or the bonds became worthless or depreciated in value. They did not do so, and the reason is manifest. It is that the very purpose and object of the agreement was to insure the telephone company against that contingency, and by their contract the subscribers agreed that either by a sale to others or a purchase themselves they would in-

sure the company the receipt of the par value of the bonds for which they subscribed, however worthless they might become. They agreed to assume the risk of the depreciation of the bonds for the chance that their prospective value, the value of their commission of five per cent. in cash and 40 per cent. in stock of the telephone company, would more than remunerate them for their undertaking; and it is no defense that their expectations have not been realized or that their trade turned out a bad bargain. There was no error in the ruling of the District Court that the underwriting was not a mere agreement to lend money to the telephone company.

Just before Mr. Busch signed the agreement, he and other directors of the telephone company demanded from it, and its board of directors by a resolution agreed that the company would build a plant costing about $1,000,000 in the city of St. Louis, and thereupon Mr. Busch raised his subscription from $50,000 to $100,000, but the company never built the plant. It is specified as error that the court below held that these facts constituted no defense to this action: (1) Because the contract to build was not embodied in the underwriting and did not alter its terms; and (2) because, even if the agreement of the defendant to take and pay for the bonds and the agreement of the company to build the plant had been parts of an entire contract, they were not mutual and dependent covenants, but the covenant to build was independent of the covenant to take and pay for the bonds.

In support of this specification counsel contend that "the signature of Mr. Busch to the underwriting was conditional upon the erection of a plant at St. Louis." The record, however, fails to convince that Mr. Busch conditioned either his signature or his covenant to sell or purchase the bonds by the erection of such a plant. Mr. Busch might have made his signature or his performance of his covenant conditional on the erection of the plant by an appropriate provision in the underwriting, and if he intended to condition them it was his duty to express the condition in that contract. He inserted no such provision. Not only this, but the plant never was built, and at a meeting of the board of directors of the company on March 5, 1906, that board determined and resolved that the construction of this plant was necessarily to be deferred for the present. Notwithstanding all this, Mr. Busch paid four of his five installments, amounting to $80,000, and he paid two of them, amounting to $40,000, after the resolution of March 5, 1906, deferring the construction of the plant. It cannot be held, in the face of these facts, that Mr. Busch either conditioned or intended to condition his signature to the underwriting or his covenant to purchase the bonds with the construction of the plant at St. Louis. And conceding, without admitting, that the agreement of the company to build the plant and the agreement of the subscribers to sell or take and pay for the bonds were parts of an entire contract, the former covenant was independent of the latter, because it was not to be performed at the times when the latter was, and no time for its performance was stipulated or fixed, while the times of the performance of the latter were specified in the covenant itself.

[3] Where acts are stipulated to be done at specified times by one covenant of a contract, and acts are stipulated to be done without fix-

ing any time for their performance by another covenant thereof, the latter covenant does not condition the former, is independent of it, and a breach of the latter, while it may raise a cause of action, is no defense to an action for a breach of the former. The same rule generally governs where acts are stipulated by one covenant to be done at different times from those fixed by another covenant for the performance of other acts. In Loud v. Pomona Land & Water Co., 153 U. S. 564, 578, 14 Sup. Ct. 928, 932 (38 L. Ed. 822), the Supreme Court said:

"In the learned note of Serjeant Williams to the early case of Pordage v. Cole, 1 Saund. 320a, it is said that 'if a day be appointed for payment of money, or part of it, or for doing any other act, and the day is to happen, or may happen, before the thing which is the consideration of the money, or other act, is to be performed, an action may be brought for the money or for not doing such other act before performance; for it appears that the party relied upon his remedy, and did not intend to make performance a condition precedent; and so it is where no time is fixed for performance of that which is the consideration of the money or other act.'"

And this is still the law and the reason of such a case and of this case. Goldsborough v. Orr, 8 Wheat. 217, 223, 5 L. Ed. 600; American Emigrant Co. v. County of Adams, 100 U. S. 61, 71, 25 L. Ed. 563; Red Wing Hotel Co. v. Friedrich, 26 Minn. 112, 115, 1 N. W. 827; Clark on Contracts (1894) pages 655, 656. The court below rightly held that the contract of the telephone company to build the plant and its breach was no defense to the action against Mr. Busch for his breach of his agreement to take and pay for the bonds at the times he promised to do so.

[5] All the assignable rights of the telephone company in or under the underwriting have been duly transferred and conveyed to the plaintiff below, Stromberg-Carlson Telephone Manufacturing Company; but counsel argue that the contract was not assignable, because it recited that the telephone company desired "to sell an additional $2,500,000 for the purpose of financing its future business and to secure the underwriting of said $2,500,000 bonds or such portions thereof as it shall not sell," and because it evidenced a personal trust and confidence of the subscribers in the telephone company to use itself the money to be paid for the bonds for the future business of the company and not to pay its old debts. The argument is not persuasive. It was as indispensable to the successful financing of the future business of the company that its just debts should be paid as that new purchases of property should be made, and the underwriting evidences no legal or moral restriction of the use of the money to be secured by the sale of the bonds to purposes other than the payment of the debts of the company or to any specific purpose. It is the customary underwriting contract, and the money realized from it was legally applicable to the payment of the debts or to any other lawful use of the corporation. The general rule is that contracts and choses in action are assignable, and this contract falls under no exception to that rule. Kirkpatrick v. Eastern Milling & Export Co. (C. C.) 135 Fed. 146, 149; Litchfield Savings Society v. Dibble, 80 Conn. 128, 67 Atl. 476, 477.

[6] Finally, counsel contend that the court erred, in that it allowed a recovery of the entire $20,000 which Mr. Busch agreed to pay as the last installment of the price of the bonds for which he subscribed, when

the recovery should have been limited to the difference between the amount he agreed to pay and the value of the bonds and stock he was to receive for the payment. The agreement on which this suit is founded is a contract to insure the sale of the subscribed bonds at par, and to buy at par the subscribed bonds not sold, and the true measure of damages for the breach of this agreement is the difference between the agreed price and the value at and after the breach of the bonds and stock which the defendant was to obtain therefor. Gordon v. Norris, 49 N. H. 376, 383; Collins v. Delaporte, 115 Mass. 159, 162; 2 Sedgwick on Damages (9th Ed.) § 753; Yellow Poplar Lumber Co. v. Chapman, 74 Fed. 444, 454, 456, 20 C. C. A. 503, 513, 515; Cherry Valley Iron Works v. Florence Iron River Co., 64 Fed. 569, 575, 12 C. C. A. 306, 312; Newark City Ice Co. v. Fisher, 76 Fed. 427, 22 C. C. A. 261; Salem Iron Co. v. Lake Superior Consol. Iron Mines, 112 Fed. 239, 245, 50 C. C. A. 213, 219; Denver Engineering Works Co. v. Elkins (C. C.) 179 Fed. 922, 927; South African Territories v. Wallingford, 1 App. Cas. (1898) 309, 1 Q. B. Div. (1897) 692, 695; Railroad Co. v. Seager, 7 Pa. Super. Ct. 268, 270, 271, 272; San Antonio Ry. Co. v. Busch (Tex. Civ. App. 1893) 21 S. W. 164; Id. (Tex. Civ. App.) 23 S. W. 308.

The recovery to which the plaintiff was entitled was, therefore, the difference between the $20,000 Mr. Busch agreed to pay and the value of the stock and bonds he was to receive for that payment, with interest on that difference. The court below did not find the value of the bonds and stock, nor the difference between that value and the agreed price, although there was evidence in the case tending to show that they had some value. The result is that the findings of the court fail to support the judgment, because they do not contain any finding of the value of the bonds at or after the breach of the contract, nor of the difference between that value and the agreed price of the bonds, and they convince that the damages for the breach were not measured by the true criterion.

For this reason, the judgment below must be reversed, and the case must be remanded to the court below, with directions to grant a new trial. It is so ordered.

CARLAND, Circuit Judge (dissenting as to result). The majority opinion declares:

"It is, therefore, no defense to an action against one of the subscribers for his breach of his contract that the telephone company became insolvent and the bonds worthless after he made his contract; much less is it a defense to a subscriber who, like Mr. Busch, has performed four-fifths of his undertaking and received four-fifths of its fruits. Peck Colorado Co. v. Stratton (C. C.) 95 Fed. 741; Otis v. Cullum, Receiver, 92 U. S. 447, 23 L. Ed. 496. The subscribers might have provided in their agreement that they should be released from their undertaking in case the company became insolvent or the bonds became worthless or depreciated in value. They did not do so, and the reason is manifest. It is that the very purpose and object of the agreement was to insure the telephone company against that contingency, and by their contract the subscribers agreed that either by a sale to others or a purchase themselves they would insure the company the receipt of the par value of the bonds for which they subscribed, however worthless they might become. They agreed to assume the risk of the depreciation of the

bonds for the chance that their prospective value, the value of their commission of 5 per cent. in cash and 40 per cent. in stock of the telephone company, would more than remunerate them for their undertaking; and it is no defense that their expectations have not been realized or that their trade turned out a bad bargain."

I concur fully in this clear and forcible statement of the law, and hence I fail to comprehend the opinion of the majority when as a result of the court's opinion it declares that the measure of damages is the difference between what Busch agreed to pay for the bonds and stock and what the actual value of the same may be shown to be at the trial. The only defense that plaintiffs in error made at the trial, upon the question of damages, was that the bonds and stock had become worthless by reason of the insolvency of the corporation which issued the same. The reasoning of the majority opinion in the language above quoted necessarily results in the affirmance of the judgment below, which I believe would be entirely correct, and for this reason I dissent from the conclusion reached in the opinion of the court.

If I buy bonds and stock at par to-day, I may not, in the absence of a special warranty or fraud, defend to-morrow on the ground that the stock has fallen to 50 cents.

(217 Fed. 335)

PARRISH v. FOREMAN-BLADES LUMBER CO. et al.

(Circuit Court of Appeals, Fourth Circuit. February 21, 1914. On Rehearing, November 19, 1914.)

No. 1227.

1. ADVERSE POSSESSION (§ 101*)—CONSTRUCTIVE POSSESSION.

The holder of the older and better title is to be regarded as having constructive possession, and the holder of the junior and inferior title, that may overlap it, cannot hold adversely until he has entered into the actual boundary claimed by the older and better title and acquired adverse possession thereof or of some part of it; it being insufficient that he enters into possession of land outside the boundaries of the land in controversy, though within the limits of his paper color of title.

[Ed. Note.—For other cases, see Adverse Possession, Cent. Dig. §§ 575–589; Dec. Dig. § 101.*]

2. ADVERSE POSSESSION (§ 53*)—COLOR OF TITLE—CONTINUITY OF POSSESSION.

Where a claimant under color of title takes possession and holds for a time adversely, but vacates before the statutory period expires, the moment such vacation occurs the owner, by reason of his legal title, will be regarded as in constructive possession, and the adverse possession of the wrongdoer is at an end.

[Ed. Note.—For other cases, see Adverse Possession, Cent. Dig. §§ 266–270; Dec. Dig. § 53.*]

3. ADVERSE POSSESSION (§ 112*)—BURDEN OF PROOF.

The burden is on him who asserts adverse possession to sustain every element involved therein by a preponderance of the proof, and, if he fails with reference to any element, it is the court's duty to charge that there is no sufficient evidence of adverse title.

[Ed. Note.—For other cases, see Adverse Possession, Cent. Dig. §§ 651, 653, 654, 657–659, 661–663, 665, 666; Dec. Dig. § 112.*]

---

*For other cases see same topic & § NUMBER in Dec. & Am. Digs. 1907 to date, & Rep'r Indexes

4. ADVERSE POSSESSION (§ 14*)—CONSTRUCTIVE POSSESSION.
No length of constructive possession will ripen a defective title into a valid one, but the possession for that purpose must be actual and continuous.

[Ed. Note.—For other cases, see Adverse Possession, Cent. Dig. §§ 77–81; Dec. Dig. § 14.*]

5. ADVERSE POSSESSION (§ 14*)—POSSESSION OF TRUE OWNER.
Where there is no actual possession of land, the law carries the possession to the real owner.

[Ed. Note.—For other cases, see Adverse Possession, Cent. Dig. §§ 77–81; Dec. Dig. § 14.*]

6. ADVERSE POSSESSION (§ 44*)—COLOR OF TITLE.
Possession of land under color of title must be taken by the claimant himself, his servants or tenants, and by him or them continued for the statutory period, and is not established by proof of a single entry on the land against which an injunction has been promptly secured.

[Ed. Note.—For other cases, see Adverse Possession, Cent. Dig. §§ 226–231; Dec. Dig. § 44.*]

In Error to the District Court of the United States for the Eastern District of North Carolina, at Elizabeth City; Henry G. Connor, Judge.

Action by T. K. Parrish against the Foreman-Blades Lumber Company and others. Judgment for defendants, and plaintiff brings error. Reversed.

George W. Ward, of Elizabeth City, N. C., and J. Crawford Biggs, of Raleigh, N. C. (Ward & Thompson, of Elizabeth City, N. C., and Winston & Biggs, of Raleigh, N. C., on the brief), for plaintiff in error.

A. D. MacLean, of Washington, N. C., and W. D. Pruden, of Edenton, N. C. (James H. Pou, of Raleigh, N. C., and J. B. Leigh, of Elizabeth City, N. C., on the brief), for defendants in error.

Before PRITCHARD and WOODS, Circuit Judges, and DAYTON, District Judge.

DAYTON, District Judge. The plaintiff in error, also plaintiff below, claimed, in this action, that, as tenant in common with the defendants, he was the owner of an undivided two-thirds interest in a tract of 3,306 acres of land, a part of the Josiah White tract, situate in Pasquotank county, N. C. He charged defendants with entering thereon, unlawfully cutting timber therefrom, and refusing to account to him therefor, or any part thereof, wherefore he had secured an injunction from the court below, inhibiting such timber cutting until this action could be instituted at law and the title inter partes could be determined therein. Replying to this complaint, defendants substantially pleaded adverse possession, under color of title, for 3, 7, or 20 years, according to whichever term of limitation, by law, might be necessary to bar plaintiff's right of entry. A trial had in the court below resulted in a verdict and judgment for the defendants.

Without setting forth the long and complicated chain whereby

*For other cases see same topic & § NUMBER in Dec. & Am. Digs. 1907 to date, & Rep'r Indexes

plaintiff traced his title back to the commonwealth's grant to Hamilton, it is sufficient to say that on August 5, 1857, Skinner and Warren owned a two thirds undivided interest and one Cannon the other undivided third interest in this land. On that date they executed their deeds, one to the other, whereby they constituted a line running "south 21½ west from Temple's corner" as a division one between them. Numerous subsequent conveyances and judicial proceedings introduced in evidence substantially established the fact that this paper title, at the time of the institution of this suit, was vested, so far as the land in controversy lying west of this division line was concerned, two undivided thirds in plaintiff and the remaining third in defendants. But, while this is true, it also appears to be true that, after the division line was established, Warren and Cannon undertook, by deed of date September 16, 1866, to convey land lying west of this line, including the land in controversy, to Underwood and wife, and White, on his part, undertook to exclude Cannon and claim the whole of the tract, lying west of the line, in severalty, and in subsequent conveyances by White and his grantees (including three decrees in equity causes relating to his title) the whole of the tract is sought to be conveyed and transferred and not an undivided interest. In effect this gives rise to defendant's contention that, on both sides, the parties in interest, by their acts and deeds, undertook to and did oust each other as tenants in common as to the land in controversy and practically acquired paper colors of title, and the one, so acquired by them, by seven years' adverse possession, has barred plaintiff's right in their favor. On the other hand, it is very earnestly insisted by plaintiff that the general rule "that where one of the several tenants in common executes a deed purporting to convey the entire premises to one who enters in possession thereunder, claiming title or recording his conveyance, this will constitute a disseisin of his cotenants, and after the expiration of the statutory period of limitations their right to the land will be barred," is not upheld in North Carolina, but the contrary, and therefore, being tenants in common still, nothing short of 20 years' adverse possession could bar plaintiff's right. A number of North Carolina cases are cited to sustain this contention. In our view of the case this question becomes immaterial. It is conceded that only color of title could be secured by any such attempted disseisin, and that adverse possession must be held for at least seven years before such color could ripen into perfect title.

[1] Such possession must be adverse, actual, visible, exclusive, and continuous. The holder of the older and better title is always to be regarded as having constructive possession, and the holder of the junior and inferior title, that may overlap it, cannot hold adversely until he has entered upon the actual boundary claimed by the older and better title and acquired adverse possession of it or of some part of it. In other words, he cannot, by entry into and possession of land outside of the land in controversy, although it be within the limits of his paper color of title, overcome the superior right of the holder of the better title by reason of the constructive possession vested by law in the latter.

[2] In case, too, the claimant under color of title does take possession and hold for a time adversely, but vacates before the statutory period expires, that moment the owner, by reason of his legal title, will be regarded as in the constructive possession and the adverse possession of the wrongdoer at an end.

[3] It follows that the evidence of adverse possession must be preponderant, and that the burden is upon him who asserts it to sustain every element involved in it, and, failing in proof of any one of these elements necessary to constitute it, it is the duty of the court to instruct the jury that there is no sufficient evidence to allow him to hold the land. 1 Cyc. 981 et seq. and 1143. Davis v. Seybold (C. C. A. 4th Ct.) 195 Fed. 402, 115 C. C. A. 304; Jarvis v. Johnson (D. C.) 208 Fed. 353.

[4] As said by the Supreme Court of North Carolina in Williams v. Wallace, 78 N. C. 308 (side page 354):

(1) No length of constructive possession will ripen a defective title to land into a good one; the possession must be actual and continuous.

[5] (2) Where there is no actual possession of land shown, the law carries the possession to the real owner.

[6] (3) A possession of land under color of title must be taken by a man himself, his servants or tenants, and by him or them continued for seven years together; therefore, where, in an action to recover land, it appeared that the plaintiff under color of title had made occasional entries upon the land at long intervals for the purpose at one time of cutting timber, at another of making bricks, &c., held, that the plaintiff was not entitled to recover.

Governed by these well-settled principles of law, an examination of all the evidence introduced for the purpose of establishing adverse possession, under color of title in the defendants, of the land actually in controversy in this case, has convinced us that it was wholly insufficient for the purpose, but, on the contrary, tended to refute the claim that such possession had been attempted to be taken within the boundaries of the land lying west of the division line to which this controversy alone related, except upon one occasion, when an injunction was promptly secured against it. The learned trial judge, therefore, erred in refusing the plaintiff's motion for an instructed verdict in his favor.

The judgment of the court below will be reversed, and the case remanded, with instructions to set aside the verdict and award a new trial.

Reversed.

On Rehearing.

PRITCHARD, Circuit Judge. This case was heard and decided by this court at the February term, 1914, at which time the court filed an opinion, reversing the judgment of the lower court, in which it was held that there was not sufficient evidence offered in that court bearing upon the question as to the possession of the defendants to justify the jury in finding in favor of the defendants, and a reversal was directed, and judgment entered accordingly.

On June 13, 1914, a rehearing was granted upon a petition of de-

fendants in error, and the case was reargued at this term. After due consideration of the same, we are of opinion that the conclusion reached by this court in the first instance as respects this point was correct.

Therefore we adhere to our former decision reversing the judgment of the lower court.

(217 Fed. 339)

McKINNON v. NEW YORK ASSETS REALIZATION CO.

(Circuit Court of Appeals, Second Circuit. July 30, 1914.)

No. 232.

1. INJUNCTION (§ 26*)—RESTRAINING PROSECUTION OF ACTION AT LAW—DEFENSES AVAILABLE IN LAW ACTION.

A court of equity will not enjoin the prosecution of an action at law against the complainant, to enable him to establish a defense which, under the statute, he might have pleaded as a counterclaim in the action at law.

[Ed. Note.—For other cases, see Injunction, Cent. Dig. §§ 24–49, 54–61; Dec. Dig. § 26.*]

2. SUBROGATION (§ 26*)—PERSONS ENTITLED TO SUBROGATION—VOLUNTARY PAYMENT OF DEBT OF ANOTHER—"VOLUNTEER."

One who is under no legal obligation or liability to pay a debt is, if he pays it, a mere "volunteer," and cannot invoke the principle of exoneration through subrogation to the rights and securities of the creditor.

[Ed. Note.—For other cases, see Subrogation, Cent. Dig. § 67; Dec. Dig. § 26.*

For other definitions, see Words and Phrases, First and Second Series, Volunteer.

Nature and theory of right of subrogation, see note to Merchants' & Miners' Transp. Co. v. Robinson-Baxter-Dissoway Towing & Transp. Co., 113 C. C. A. 434.]

3. SUBROGATION (§ 26*)—VOLUNTARY PAYMENT OF DEBT.

Corporate stock owned by a bank was wrongfully pledged by another, with stock of another owner, as collateral security for his own note. On maturity he tendered payment of the note, which was refused. Subsequently the bank paid the note and received all of the collateral. *Held*, that the tender by the pledgor, while it did not discharge the debt, extinguished the lien of the pledgee, that the bank could have then recovered its own stock without payment of the note, and that such payment was voluntary, and gave it no legal right to exoneration or contribution from the stock of the other owner.

[Ed. Note.—For other cases, see Subrogation, Cent. Dig. § 67; Dec. Dig. § 26.*]

Appeal from the District Court of the United States for the Southern District of New York.

This suit comes here on appeal from an order and decree made in the District Court of the United States for the Southern District of New York and dated December 19, 1913, dismissing the bill of complaint for insufficiency of facts to constitute a valid cause of action.

On or about February 8, 1907, Arthur P. Heinze contracted to purchase from Clinton Gilbert and Charles W. Morse 2,815 shares of Chase National Bank stock at the price of $275 for each share, and on or about that day he paid $111,000 on account of the purchase price. On or about June 12th of the same year Heinze desired to borrow $150,000 to use in payment of a part of the purchase price, and made an arrangement with Charles W. Morse to give

*For other cases see same topic & § NUMBER in Dec. & Am. Digs. 1907 to date, & Rep'r Indexes

the latter his note for $150,000 to be secured by 500 of these shares of the stock of the Chase National Bank, which were to be purchased with the proceeds thereof, and 2,000 shares of the common stock of United Copper Company; and this note Morse was to have discounted and devote the proceeds to the payment of the balance of the purchase price. In order to obtain for Heinze the money required, Morse made an arrangement with the Metropolitan Trust Company to borrow the sum of $150,000 on his own note to be secured by 1,000 shares of Chase National Bank stock. Heinze then caused to be delivered to Morse the 500 shares of the Chase National Bank stock, which he was able to obtain because the arrangement had been completed to obtain money to pay for the same out of the proceeds of the note. Thereupon on June 16, 1907, Morse gave his note for $150,000 to the Metropolitan Trust Company, secured by those 500 shares and other 500 shares of the Chase National Bank stock belonging to the National Bank of North America, all which shares had been taken for this purpose by Morse without the authority or consent of either Heinze or of the National Bank of North America. The proceeds of Morse's note were applied to the payment for the balance of the purchase price owing by Heinze upon his purchase of the Chase National Bank stock. Morse, having taken the bank's 500 shares to secure money to pay Heinze's indebtedness, transferred the latter's note to the bank, which still owns it. Before the maturity of the note at the Metropolitan Trust Company that company was notified that Morse was not the owner of any of the 1,000 shares which he had pledged, but that 500 shares belonged to the bank and the other 500 shares belonged to defendant Heinze, which the bank was entitled to receive as security for an indebtedness due to it by Heinze. The latter also notified the trust company that 500 of the shares belonged to him, but made no tender of the amount owing either upon the Morse note or upon his own note for the same amount. Upon the maturity of the note, Morse and one John L. Elliott tendered the full amount and interest of the Morse note to the trust company and demanded the return of the 1,000 shares of the Chase National Bank stock. This request was not complied with, on the ground that the stock did not belong to Morse and Elliott, and that 500 of the shares were the property of Heinze. Thereafter the trust company refused a tender made by the receiver of the National Bank of North America. An action was then begun by the receiver against the trust company for the conversion of the 500 shares of stock belonging to the bank, which action was successful, and by stipulation the trust company delivered 1,000 shares of the stock of the Chase National Bank on the payment to it by the receiver of $150,000 with interest. And on appeal to this court the judgment was affirmed. 172 Fed. 846, 97 C. C. A. 194.

The receiver paid the trust company the amount of Morse's note and received the 1,000 shares of Chase National Bank stock, and assumed to hold in accordance with the opinion of this court "the possession of all of the collateral, one-half as owner, the other as substituted pledgee." The receiver having thus obtained possession of the shares sold the whole 1,000 shares. The sale was made on September 3, 1911, was in accordance with the terms of the Morse note, and after notice to Heinze had been given; and the latter is alleged in the bill of complaint to have acquiesced in the sale.

Thereafter and on December 12, 1911, the New York Assets Realization Company, the defendant herein, as assignee of Heinze, commenced an action at law for the alleged conversion of these shares of stock through this sale, and demanded $275,000 damages. The complaint was dismissed; but on writ of error this court reversed the judgment, on the ground that Morse's tender had discharged the lien of the trust company (209 Fed. 791, 126 C. C. A. 515); and on rehearing this court adhered to its previous ruling (209 Fed. 795, 126 C. C. A. 515).

J. Markham Marshall and Alexander B. Siegel, both of New York City, for appellant.

Ferdinand E. M. Bullowa, of New York City (Ferdinand E. M. Bullowa, Emilie M. Bullowa, and Richard S. Harvey, all of New York City, of counsel), for appellee.

Before WARD, HUNT, and ROGERS, Circuit Judges.

ROGERS, Circuit Judge (after stating the facts as above). [1] This is a suit in equity in which the District Court was asked to enjoin the defendant from the prosecution of an action at law which it has brought against the complainant to recover for the alleged conversion of 500 shares of the capital stock of the Chase National Bank of New York, which shares are alleged to be of the value of $275,000 and to assume jurisdiction of the whole controversy existing between the parties in respect to the stock in question. The suit is brought upon the theory that the complainant is entitled to certain relief which a court of equity alone can grant; and it is necessary for us to determine whether the court below erred in dismissing the bill.

When Morse pledged with the trust company the Heinze shares and the shares belonging to the National Bank of North America, the trust company had no knowledge of the fact that Morse had no title to the stocks and was without power to make such use of them. The trust company advanced the money bona fide upon the Morse note without notice of the actual ownership of the shares and in reliance upon the apparent title of Morse. This wrongful pledge of the stock gave the trust company a lien upon it by estoppel under the authority of the well-known case of McNeil v. Tenth National Bank, 46 N. Y. 325, 7 Am. Rep. 341 (1871).

And so long as the lien continued the National Bank of North America, if it desired to recover the possession of the shares, would have been under the necessity of paying the Morse note, and if it had, under such necessity, paid the note in order to protect its rights and save its property, it would, no doubt, have been justified in invoking the principle of subrogation and would have succeeded to the rights and securities of the trust company.

But the difficulty is that the lien which the trust company acquired on the collateral deposited with it was lost prior to the time when the bank paid the note. It appears from the allegations contained in the bill that after Morse's note had matured he tendered to the trust company the full amount, with interest, and demanded the return of the collateral, but the tender and the demand were refused. Likewise after the maturity of the note the receiver of the National Bank of North America tendered the trust company the amount due, with interest, and demanded the delivery of the stock, and this demand was also refused.

The refusal of the trust company to accept the tender made by Morse, the pledgor, did not discharge the debt, but it did discharge the lien. We have already passed on that question and decided that the lien was lost. New York Assets Realization Co. v. McKinnon, 209 Fed. 791, 126 C. C. A. 515 (1913). That question cannot be regarded as an open one in this court. We know of no conflict in the authorities, and the principle is as well established as any other in the law, that a valid legal tender of the amount of a lien debt discharges the lien and leaves the creditor to his personal claim against the debtor.

The receiver of the National Bank of North America, after the trust company refused its tender and demand for the return of the collateral,

brought an action against it for the conversion of the 500 shares which belonged to the bank. It had been stipulated before the case was tried that if a verdict should be found in favor of the plaintiff "judgment should be entered to the effect that the Metropolitan Trust Company should deliver the said note of Charles W. Morse, dated June 13, 1907, together with the said 1,000 shares of the stock of the Chase National Bank, to the said Charles A. Hanna, as receiver of the National Bank of North America in New York, upon payment to the said Metropolitan Trust Company, by the said Charles A. Hanna as receiver, as aforesaid, of the full amount due upon the said note." A verdict was directed in favor of the plaintiff, and judgment entered in accordance with the verdict and stipulation. Upon appeal to this court the judgment was affirmed. Metropolitan Trust Co. v. McKinnon, 172 Fed. 846, 97 C. C. A. 194 (1909). There were expressions contained in that opinion which indicated that the bank could only obtain possession of the collateral by paying the note, and that in paying the note the bank would not be a volunteer, nor an intermeddler, but would be protecting its own property. Thereupon the complainant paid the note and received the collateral; and having thus obtained possession of the 1,000 shares it sold them at the highest price obtainable, $362.50 a share. It applied the proceeds realized from the sale of Heinze's 500 shares to the payment of the Morse note, and what remained was applied to the payment of the note due from Heinze to the bank.

This led to the commencement of an action brought by the New York Assets Realization Company, as assignee of Heinze, to recover $275,000 for the conversion of the stock by the sale which the bank had made. The complaint was dismissed in the court below, but the case was reversed in this court. The reversal was based on the fact that the tender had discharged the lien, a fact which does not seem to have been brought to the court's attention in the earlier case in this court. That decision, therefore, established the right of the New York Assets Realization Company, as the assignee of Heinze, to maintain its action at law against McKinnon as the agent of the National Bank of North America to recover for the conversion of the stock, and that action is still pending. It is that action which we are now asked to enjoin.

It appears that, in the answer which McKinnon interposed to the complaint in that action, he failed to set up by way of counterclaim and in diminution of damage the amount of the Heinze note for $150,000 which was transferred to the National Bank of North America by Morse, and to the payment of which, as before said, the bank, after selling the stocks, had applied a part of the proceeds thus realized.

The Revised Statutes of the United States provide that:

"The practice, pleadings, and forms and modes of proceedings in civil causes, other than equity and admiralty causes, in the Circuit and District Courts, shall conform, as near may be, to the practice, pleadings, and forms and modes of proceedings existing at the time in like causes in the courts of record of the State within which such Circuit or District Courts are held." U. S. R. S. § 914 (U. S. Comp. St. 1901, p. 684).

Under the New York Codes the complainant might have set up Heinze's note as a counterclaim in the action brought to recover for

the conversion. The Code of Civil Procedure provides (section 500) that the answer of the defendant may contain a statement of any new matter constituting a defense or counterclaim. And it is provided in section 501 that the counterclaim must be one of the following causes of action against the plaintiff or against the person whom he represents and in favor of the defendant:

(1) "A cause of action arising out of the contract or transaction, set forth in the complaint as the foundation of the plaintiff's claim, or connected with the subject of the action."

The matter which the complainant relies upon, and asserts he is entitled to counterclaim, he might have set up in the action at law, as it is a matter which arose "out of the contract or transaction set forth in the complaint." He did not, however, see fit to do so, and has never made any application to the court below to amend his answer and permit him to set it up as a defense in the action at law. The fact that he might have availed himself of this defense in the action at law and has failed to do so affords him no ground for coming into equity. Bispham in speaking of the right of set-off says:

"This right [of set-off], although it did not originally exist at common law, was, nevertheless, so effectually introduced by statute that it now, perhaps, furnishes no ground for interference by a chancellor as an equitable right."

This view he supports by an extended citation of the cases. And the law is settled that where one has a good defense at law, and failed to set it up when he had the opportunity, equity withholds any assistance, unless he can show that he was prevented from availing himself of the defense by fraud or accident unmixed with his own or his agent's negligence.

[2] The complainant also bases his appeal to the aid of a court of equity upon the theory that he is entitled to be exonerated from the payment of the Morse note and to be reimbursed for his payment of the note in accordance with the terms of the judgment against the Metropolitan Trust Company by the proceeds from the sale of the Heinze stock, and that this right of exoneration is recognized solely in equity. The answer to this is that the principle of exoneration is not applicable to the facts of this case. It is true that the 500 shares which belonged to the bank were taken without consideration to it and used to secure for Heinze the money wherewith to pay for the balance of the purchase price of the shares belonging to Heinze, and that the bank at one time may have been in a position where it would have been entitled to have had the shares of Heinze's stock belonging to it exonerated from the payment of the Morse note. But, whatever its right to do this may have been, it ceased to possess any such right when it voluntarily paid the Morse note. It paid that note as a volunteer, being at the time the payment was made under no compulsion to make it. While the trust company's lien on the stock continued it could not have recovered its own stock without paying the note, but when the trust company lost its lien on the stock by the tender the bank could at once have recovered the stock without paying the Morse note. One who is under no legal obligation or liability to pay a debt

is, if he pays it, a mere volunteer. In paying the note as a volunteer the complainant lost his right to invoke the principle of exoneration.

"The equities of contribution and exoneration arise only when the payment is made in discharge of a binding obligation." Bispham's Equity, § 332.

[3] We do not question the principle that where the owner of property pledges it for the debt of another such property occupies the position of a surety. That principle has been recognized in numerous cases. Smith v. Savin, 141 N. Y. 315, 36 N. E. 338; Le Marchant v. Moore, 150 N. Y. 209, 44 N. E. 770; Farwell v. Bank, 90 N. Y. 483. And if complainant is right in thinking that the Bank of North America at one time had the right to compel the application of the Heinze shares to the payment of the Morse note before resort was had to the shares which it owned, we cannot see that that principle can be invoked now under the existing facts. If the bank's shares at one time occupied the position of surety, that position was lost when the tender was made and refused. In Mitchell v. Roberts (C. C.) 17 Fed. 781, the court said:

"When property of any kind is mortgaged or pledged by the owner to secure the debt of another, such property occupies the position of surety, and whatever will discharge a surety will discharge such property."

The jurisdiction of a court of equity to protect equitable rights by enjoining an action at law cannot, of course, be questioned. An injunction will be granted to restrain a legal proceeding whenever an equitable title is not recognized or an equitable right not enforced in the action at law, or when exact and complete justice cannot be had between the parties, except through the remedies of the equity court. But there is nothing in the facts of this case to show that the complainant has any right for which courts of law do not afford an adequate remedy.

Decree affirmed.

(217 Fed. 344)

THE SAMSON.†

BARGES NOS. 8, 9, AND 27.

(Circuit Court of Appeals, Ninth Circuit. October 13, 1914.)

No. 2393.

1. ADMIRALTY (§ 118*)—REVIEW ON APPEAL—FINDINGS OF FACT.

In cases on appeal in admiralty, when questions of fact are dependent on conflicting evidence, the decision of the district judge, before whom the case was tried, and who heard and saw the witnesses, will not be reversed, unless clearly against the evidence.

[Ed. Note.—For other cases, see Admiralty, Cent. Dig. §§ 758–775, 794; Dec. Dig. § 118.*]

2. COLLISION (§ 66*)—MEETING TOWS—UNMANAGEABLE TOW.

A finding by the district court that a collision on the Columbia river at night between barges loaded with stone in tow of a tug passing down, which had a barge on each side and one in front, and a steamer coming up with an oil barge on her side, was due to the fault of the tug, whose

*For other cases see same topic & § NUMBER in Dec. & Am. Digs. 1907 to date, & Rep'r Indexes

† Rehearing denied November 17, 1914.

tow became unmanageable, and was carried by the current over toward the Oregon side of the river, *held* supported by the evidence.

[Ed. Note.—For other cases, see Collision, Cent. Dig. § 84; Dec. Dig. § 66.*

Collision with or between towing vessels and vessels in tow, see note to The John Englis, 100 C. C. A. 581.]

8. COLLISION (§ 132*)—SUIT FOR DAMAGES—MEASURE OF DAMAGES.

Where a vessel, which became a total loss as the result of a collision, had no market value, the cost of her construction, with proper deduction for depreciation, may properly be taken as the measure of damages.

[Ed. Note.—For other cases, see Collision, Cent. Dig. § 286; Dec. Dig. § 132.*]

Appeal from the District Court of the United States for the District of Oregon; Edward E. Cushman, Judge.

Suit in admiralty for collision by the Shaver Transportation Company, owner of the steamer Henderson, against the steam tug Samson and barges No. 8, No. 9, and No. 27, Columbia Contract Company, claimant, with the Standard Oil Company of California impleaded. Decree against respondent vessels, and claimant appeals. Affirmed.

For opinion below, see 208 Fed. 347.

Libel in rem against the steamer Samson and barge No. 8, barge No. 9, and barge No. 27, owned by the Columbia Contract Company, and libel in personam against the Standard Oil Company of California, owner of oil barge No. 93, for damages for loss of the steamer Henderson.

Teal, Minor & Winfree and Rogers MacVeagh, all of Portland, Or., for appellant.

Wood, Montague & Hunt, of Portland, Or., for appellee.

Snow & McCamant and George B. Guthrie, all of Portland, Or., for Standard Oil Co.

Before GILBERT, ROSS, and MORROW, Circuit Judges.

MORROW, Circuit Judge. 1. This action is the result of a collision between the steamship Henderson and a barge loaded with stone in tow of the tugboat Samson on the Columbia river on July 22, 1911, at about 1:40 a. m.

The Henderson was a stern-wheel river steamer 158 feet long with a beam of 31.6 feet. At the time of the accident, she was proceeding up the river at a speed of about three or four miles an hour, and was towing a steel oil barge, known as barge No. 93, owned by the Standard Oil Company. The oil barge was 300 feet long, with a beam of 34 feet. The Henderson was lashed to the port quarter of the oil barge in such manner that she extended along the port side of the barge a distance of about 100 feet; the stem of the Henderson being slightly inclined toward the side of the oil barge. The barge had no motive power of her own; but the pilot who was in command of both vessels was stationed on the oil barge, and the steering of both vessels was directed by him from the deck of the oil barge.

The Samson was a sea-going tugboat about 110.4 feet long with a beam of 25.4 feet. She was proceeding down the river at a speed of

*For other cases see same topic & § NUMBER in Dec. & Am. Digs. 1907 to date, & Rep'r Indexes

about seven miles an hour, and was towing three barges (Nos. 8, 9 and 27), each of which was loaded with about 1,000 tons of stone. The barges were arranged in what is known as a "spike tow"; barge No. 8 being lashed to the starboard side of the Samson in such position that the stern of the barge was about abreast of the beam of the tugboat, barge No. 9 being lashed to the port side of the Samson and opposite to and abreast of barge No. 8, and barge No. 27 being lashed between barges Nos. 8 and 9 and directly in front of the tugboat, the stern of barge No. 27 setting against the stem of the tugboat. Barge No. 8 and barge No. 9 were about 160 feet long, with a beam of 38 feet. Barge No. 27 was 150 feet long, with a beam of 36 feet. Barges Nos. 8 and 9 extended in front of the stem of the Samson for a distance of about 90 feet, and barge No. 27 extended in front its full length of 150 feet. The barges were propelled and steered by the tugboat and were in command of a pilot who was stationed on the tugboat.

The night of the accident was dark, but clear. There was no fog, and lights were easily discernible. The tide was running downstream, and the ordinary flow thereof was increased by reason of the freshets of that season of the year. On the right-hand side of the river, ascending the same, was the Oregon shore; on the left-hand side was Puget Island. At the point of the accident, and for a distance of about a mile above the same, the river was about one-half of a mile wide. Deep water prevailed from shore to shore. The channel was designated by a range line extending approximately down the center of the river; the range line being delineated by range lights placed at appropriate points on the shore. About one mile up the river from the point of the accident it made a turn to the eastward around a point of Puget Island, forming an angle of about 135 degrees.

The pilot, who was in charge of the Samson and the barges which she was towing, testified that he first saw the Henderson and the oil barge coming up the river as he was rounding the point of Puget Island at the bend of the river; that the Samson was then well over on the island side of the river, and only about 400 feet from that shore; that, upon observing the Henderson, he immediately ported his helm; that, when the Henderson had reached a point about one-half of a mile down the river, she blew one whistle, thereby indicating that she intended to pass the Samson port to port; that he immediately answered with one whistle; that, upon the exchange of these signals, he ported his helm a little more; that about two minutes intervened between the time when he first saw the Henderson and the time when the whistles were exchanged and the helm of the Samson further ported; that at the latter time he was about 800 feet off of the Puget Island shore; that he continued to put his helm to port until he was within about 400 feet of the Henderson; that the Henderson then gave another whistle, again signifying her intention to pass port to port; that he answered this second signal, and then put the helm of the Samson hard over to port; that he was then about 800 feet from the Puget Island shore; and that the collision occurred almost immediately after the second whistles were exchanged. The evidence is conflicting as to which of the barges in tow of the Samson struck the Henderson. Both barge

No. 9, which was lashed to the port side of the Samson, and barge No. 27, which extended out in front of the Samson, were damaged to some extent, and it is very probable that both of them contributed to the hole which was torn in the port bow of the Henderson just aft of the stem. The oil barge was not damaged. The lines by which the Henderson was lashed to the oil barge were broken by the force of the impact, and she sank almost immediately thereafter, drifted down the river for some distance, and was later beached by the Samson in shallow water along the Oregon side of the river. After the collision, the oil barge was anchored in the river about 200 feet from the Oregon shore. The Samson's barges were also anchored, but the testimony is in conflict as to their positions; the pilot of the Samson testifying that they were anchored within 200 feet of the Puget Island shore, and some fishermen, who were tending their nets in the vicinity, testifying that two of them were anchored on the Oregon side of the river and the third on the Puget Island side.

So far as the signals exchanged between the vessels prior to the collision are concerned, the testimony is in all substantial respects without conflict. But the testimony relating to the position of the Henderson and of the Samson at the time of the collision, with respect to the range line marking the channel of the river, is absolutely irreconcilable. The range line, as we have stated, extended up the middle of the river. In view of the signals which had been exchanged between the vessels, the Henderson was therefore entitled to all of that portion of the stream lying on the Oregon side of the range line, and the Samson was entitled to all of that portion of the stream lying on the Puget Island side of the range line. Each of the parties, appreciating these facts, endeavored to show that its vessel was on its rightful side of the river, and that the collision was caused by the vessel of the other party transgressing thereon.

Witnesses for the libelant, including the pilot who was in charge of the Henderson and the oil barge, testified that the collision occurred on the Oregon side of the river, and the libelant contended that the position of the oil barge after the accident conclusively established the exact position of the Henderson at the time of the collision. On the other hand, witnesses for the claimant of the Samson testified that the collision occurred well over on the Puget Island side of the river, and the claimant points to certain testimony with respect to the position of the stone barges after the collision as conclusive of the question.

[1] Out of the great mass of conflicting testimony with respect to the maneuvers of the respective vessels prior to the collision, and the positions of the various tows thereafter, the learned judge of the court below found that the point of collision was well to the Oregon side of the channel, and concluded that the fault was with the Samson. This finding, under well-settled rules of appellate procedure, should not be disturbed. Spencer v. Dalles, P. & A. Navigation Co., 188 Fed. 865, 868, 110 C. C. A. 499. As said by this court in The Alijandro, 56 Fed. 621, 6 C. C. A. 54:

"The rule is well settled that in cases on appeal in admiralty, when the questions of fact are dependent upon conflicting evidence, the decision of the district judge, who had the opportunity of seeing the witnesses and judging

their appearance, manner, and credibility, will not be reversed, unless it clearly appears that the decision is against the evidence."

[2] In the present case we think the finding of the trial judge is fully supported by the great weight of the evidence. The reasonable inference to be drawn from the testimony of the pilot of the Samson is that at the time of the collision, and for some time prior thereto, he did not have complete control of his tugboat and the barges which he was towing. The tide was running down the river. In addition, it was the flood season of the year, when the currents of the river were particularly strong. The pilot testified that, at the point of the island where he made the turn to go down the river, the current had a tendency to set over to the Oregon shore, although the full sweep of the current did not commence until a point about 200 feet off the Puget Island shore was reached. Yet, despite his knowledge of these facts, he proceeded to round the point of the island, with the three barges heavily loaded with stone, at a speed of about seven miles an hour, and, as he himself testified, at a distance of about 400 feet off the Puget Island shore. That he got caught in the sweep of the current and lost control of the Samson and of her tows is shown by his testimony to the effect that when he first sighted the Henderson he had his helm aport and was about 400 feet from the Puget Island shore; that, after sighting the Henderson and receiving her first signal, he further ported his helm; that he continued with his helm almost hard aport for a distance of about one-half of a mile or until he got the second signal from the Henderson, and that at this latter time he was 800 feet from the Puget Island shore. In explanation of this he admitted that he thought the Samson drifted away from the island "on account of the current setting her off." He further testified as follows:

"Q. Still not seeing you were getting closer to the island, but on the contrary getting further away, why didn't you give hard aport helm? A. I gave her hard aport helm just before the second whistle was given. She was swinging, heading toward the island all the way. I couldn't do more than keep her that way, but she was going down broadside. Q. Didn't you think it was your duty when nervous about this bad steering and trying to give plenty of room, when you were not getting closer to the island but further away, don't you think it was your duty to put your helm hard aport? A. She was going over all the time. Giving more port helm all the time. Q. Wasn't she going away from the island? A. I couldn't help that. The boat wouldn't shove the scow in. That is all there was to it. Q. Could have by giving hard aport helm, couldn't you? A. I don't think so; would have laid right across the current with hard aport helm. Q. Do you mean you couldn't control the tow there? A. Not to get in the island that short a space; no, sir."

But the pilot insisted that, despite the fact that the Samson and the barges were caught in the sweep of the tide and were beyond his control, still at no time was he further than 800 feet from the Puget Island shore, or about one-third of the distance across the river. We think the position of the oil barge after the collision in and of itself conclusively refutes this statement. She was broken away from the Henderson by the force of the collision, and, although there is some conflict in the testimony, it is strongly in favor of the fact that her anchors were dropped within a few seconds thereafter. There is no dispute

that the oil barge was anchored about 200 feet, or, as some of the witnesses testified, within her own length (300 feet), of the Oregon shore.

[3] 2. The trial judge found that the Henderson, by reason of the collision, became a total loss; and, although there is some testimony to the effect that she could have been raised and repaired for a comparatively small sum, we think that the testimony to the effect that she was a total loss, coupled with the condition of the vessel as shown by the photographic exhibits introduced by the libelant, show that the conclusion reached by the court below was right. It appeared from the testimony of the libelant that there was no general market for vessels of the type of construction of the Henderson, and that no market value thereof could be deemed fixed. This testimony was not controverted by the claimant. The libelant then introduced testimony tending to show the original cost of the vessel, and also the extent to which she had depreciated in value. This, in the absence of market value, was the next best evidence of value.

"The measure of damages in case of total loss is the market value of the vessel at the time of the collision, together with its cargo and freight, and such other losses as are a direct result of a collision. * * * When the conditions are such that no market value can be shown, where there is no market value, or, if shown, it is so manifestly disproportionate to the intrinsic value of the vessel that to order a sale at such a price would be a hardship, the court may adopt as the value of the ship the cost of construction, with proper deduction for the deterioration in its value from the time of construction." Spencer on Marine Collisions, § 200.

By this method the court found that the value of the Henderson at the time of the collision was $38,888.21. From this sum was deducted $8,520.16, representing the net value of certain machinery salvaged from the wreck, leaving $30,368.05, to which was added the sum of $502.70, representing the value of supplies lost with the vessel, making a total of $30,870.75, for which a judgment was entered against the claimant.

The claimant contends that the amount of the judgment was excessive. We do not understand that it denies that the method employed by the trial judge in arriving at the amount of damages was not the correct one; but it insists that the amount was excessive, in view of certain testimony introduced by it showing a greater percentage of depreciation of the vessel than that adopted by the court, and also in view of certain testimony with respect to the amount which should have been awarded as the net value of the salvage. The testimony on each of these items is very conflicting. We have read all of it, and are unable to state that the record contains testimony of greater weight than that upon which the conclusion of the trial judge was based. The testimony of the builder of the Henderson was to the effect that she cost $51,597.60 at the time of her construction in 1901; that she was ten years old at the time she was sunk; and that the depreciation on all parts of her during that period would amount to $7,709.39, leaving a value at the time of the collision of $43,888.21. But, in view of other testimony tending to show a greater depreciation than that stated by the builder of the Henderson, the trial judge reduced the value of the Henderson $5,000, thus fixing the true value thereof at $38,888.21. We are of opinion that the latter amount is not excessive.

The judgment of the court below is affirmed.

(217 Fed. 350)

JACKSON CO. et al. v. GARDINER INV. CO. et al.†

(Circuit Court of Appeals, First Circuit. November 19, 1914.)

No. 1067.

CORPORATIONS (§ 584*) — LIQUIDATION — POWER OF MAJORITY — REVIEW BY COURTS.

A majority of the stockholders of the J. Company, having decided to liquidate the company, in good faith and without fraud, in corporate meeting voted to sell its assets to the N. Company for shares of stock in the N. Company of the market value of $585,000, which was to be distributed among its stockholders on the basis of 1½ shares of stock in the N. Company for each share in the J. Company; the N. Company also assuming all debts and liabilities of the J. Company. The market value of 1½ shares in the N. Company was equal to the market value of a share in the J. Company, or $975. An arrangement was also made by which the stockholders in the J. Company might receive $975 per share, instead of taking stock in the N. Company. In a suit to enjoin the sale, it was found that the market or sale value of the assets of the J. Company, as represented by a share of stock, was $1,174.94 when the sale was made, and $1,494.65 two years later, and that the replacement value was $2,721.25 when the sale was made. *Held*, that the transaction was a sale of the assets of the J. Company, and not an exchange of such assets for stock, and hence the value of the stock two years after the sale and its replacement value were immaterial, and the difference between the market value at the time of the sale as found, and the valuation placed thereon by the majority, was too slight to show gross mismanagement, and therefore the decision of the majority shareholders, made in good faith and without fraud, was not subject to revision and reconsideration by the court, and it would not enjoin the sale.

[Ed. Note.—For other cases, see Corporations, Cent. Dig. §§ 2343–2347; Dec. Dig. § 584.*

Acquisition by corporation of stock of other corporation, see note to Anglo-American Land, M. & A. Co. v. Lombard, 68 C. C. A. 120.]

Putnam, Circuit Judge, dissenting.

Appeal from the District Court of the United States for the District of New Hampshire; Edgar Aldrich, Judge.

Suit by the Gardiner Investment Company and others against the Jackson Company and others. From a decree in favor of complainants, defendants appeal. Modified.

Frank S. Streeter, of Concord, N. H. (Streeter, Demond, Woodworth & Sulloway, of Concord, N. H., and Peabody, Arnold, Batchelder & Luther, of Boston, Mass., on the brief), for appellants.

Burton E. Eames, of Boston, Mass. (Tyler, Corneau & Eames, of Boston, Mass., and Hollis & Murchie, of Concord, N. H., on the brief), for appellees.

Before PUTNAM, DODGE, and BINGHAM, Circuit Judges.

BINGHAM, Circuit Judge. When this case was previously before the court (200 Fed. 113, 118 C. C. A. 287), on cross-appeals arising out of an order of the District Court for the District of New Hampshire entering an ad interim injunction, the answer of the respondents had not been filed, and a hearing upon the merits had not been had. Since

*For other cases see same topic & § NUMBER in Dec. & Am. Digs. 1907 to date, & Rep'r Indexes

† For opinion on petition for rehearing, see 220 Fed. 297, 133 C. C. A. 324.

then certain parties other than the original complainant have been permitted by leave of court to come in either as interveners or under a supplemental bill of complaint, and various pleadings have been filed, including the answer of the respondents. The case has been sent to masters, who have heard the parties upon the merits and made their report. Upon the report a final decree has been entered in the District Court enjoining the carrying out of the sale of the assets of the Jackson Company to the Nashua Company, as voted on May 10, 1911, except upon payment to the complainants of the sum of $3,228.13 for each share of stock of the Jackson Company held by them. The case is now here on appeal by the respondents from this decree, assigning various errors.

Upon the prior appeal the respondents took the position that the District Court should have dissolved the injunction and dismissed the proceeding, on the ground that the controversy was res judicata by reason of a similar suit brought by other stockholders in the state court of New Hampshire (Bowditch v. Jackson Co., 76 N. H. 351, 82 Atl. 1014, Ann. Cas. 1913A, 366), raising the same issue, and for want of equity in the bill. It was held that the decree in the state court did not render the questions here involved, and as between these parties, res judicata; that the bill in that court was brought by specific stockholders, without an allegation that it was brought in behalf of other stockholders who might join; and that in the absence of such an allegation other stockholders could not intervene as of their own right. It also appears from the opinion then delivered that the court understood from the allegations of the bill that, while each stockholder of the Jackson Company, who declined to take stock in the Nashua Company in payment of his interest in the assets of the Jackson Company on the basis of 1½ shares of Nashua Company stock for one of the Jackson Company, might have $975 in cash for his interest in those assets as represented by each share of Jackson Company stock, free from all indebtedness, nevertheless that sum was "apparently the ordinary market value" of each share of the stock, and not its intrinsic value as represented by the assets of the Jackson Company, which the bill alleged was of the value of $3,277.51, and that as under this "arrangement a shareholder of the Jackson Company would be compelled to exchange his stock for stock of the Nashua Company on the basis named, or to receive in cash less than one-third of the intrinsic value of what he surrendered," there could be no doubt about the equity of the bill and the power of the court to afford relief; that the complainant, having come "into equity, must be content to receive, under the circumstances, a fair equivalent of the intrinsic value of its shares, to be ascertained by the court in such manner as equity requires," and was not entitled to have the court order an auction sale of the assets, as requested in one of the prayers of the bill.

We therefore understand, from the allegations and prayers of the bill and from the decision of the court, that what the original complainant sought by the bill, and what the court meant by intrinsic value of the stock, was what the assets back of the stock would bring at a fairly conducted sale, or its equivalent, as ascertained by the court upon the reception of evidence leading to that conclusion.

In the masters' report, it is found that there was no fraud or bad faith on the part of either the Jackson Company or the Nashua Company, or their officers, with relation to the sale; that the offer of the Nashua Company (which was accepted by the stockholders of the Jackson Company, the vote being 490 shares for and 104 shares against the proposition, 6 shares not being represented) provided for the purchase of the property, franchises, and good will of the Jackson Company by the payment therefor of 900 shares of Nashua Company stock, of the market value of $585,000, and the assumption of all its debts and liabilities, amounting to $1,522,679.71; that the market value of 1½ shares of the stock of the Nashua Company was equal to the market value of one share of the Jackson Company stock, or $975, and that the 900 shares of Nashua Company stock were to go into the treasury of the Jackson Company, and were to be distributed among the stockholders of that company, on the basis above stated, if they consented to take it; that stockholders owning 460 shares of Jackson Company stock consented, thus taking care of 690 shares of the Nashua Company stock; and that an irrevocable offer under seal, to continue for one year, was procured, running from the American Trust Company to the Jackson Company, agreeing, in case the trade went through, to buy the remaining 210 shares of Nashua Company stock, or any part thereof, that was not taken by stockholders of the Jackson Company, and to pay therefor the sum of $650 a share, thus assuring to every stockholder of the Jackson Company, who might decline to take Nashua Company stock, the sum of $975 for his interest in the assets of the Jackson Company as represented by each share of stock owned by him. It is thus seen that a majority of the stockholders of the Jackson Company, having decided to liquidate the company, in pursuance of this purpose, and in good faith and without fraud, entered into an agreement to sell the assets of the company for 900 shares of Nashua Company stock, of the market value $585,000, and the assumption of all its debts and liabilities, and made provision whereby a stockholder who had not already consented to take stock might have cash, which, in the case of the owner of one share, would be the sum of $975. The transaction, therefore, though in form an exchange of the assets of the Jackson Company for stock in the Nashua Company, was in substance a sale for $585,000, and the assumption of the debts and liabilities of the Jackson Company, with a provision that stockholders who desired should receive stock, and those who did not so desire should be paid in cash.

The masters have found that the market or sale value of the assets of the Jackson Company as represented by a share of stock in that company was in May, 1911, when the sale was made, $1,174.94, or $199.94 more than the value fixed by the majority in their sale to the Nashua Company; and that their market or sale value in May, 1913, was $1,494.65. It was also found that their replacement value in May, 1911, was $2,721.27, and in May, 1913, was $3,228.13. The findings as to replacement values are of no consequence, for, as above pointed out, we are only concerned with market or sale values; and the finding as to the market or sale value of the assets in May, 1913, is unimportant, for the case as now presented is not one of an exchange of assets for

stock in the Nashua Company, as it was interpreted to be by the court when it was here on the previous appeal, for then it appeared, according to the allegations of the bill, that the interest of a Jackson Company shareholder was of the value of $3,277.51, and that the vote of the majority in fixing its value at $975 could result in nothing else than in compelling the dissenting Jackson shareholders to take stock in the Nashua Company, a thing which was beyond the power of the majority to require them to do. As the transaction was a sale, and the sale was not illegal, it is evident that the value of the Jackson Company assets must be determined as of the date of the sale.

The only remaining question of importance is whether the decision by the majority shareholders in the Jackson Company that the market or sale value of the assets of the Jackson Company, as represented by a share of its stock, was $975, is subject to revision and reconsideration by the court; it having been made in good faith and without fraud. This was one of the questions under consideration in Bowditch v. Company, 76 N. H. 351, 365, 82 Atl. 1014, Ann. Cas. 1913A, 366. It was there pointed out that, when a corporation is in the hands of the court for the purpose of liquidating its assets, it is open to the court to say whether the assets should be sold at auction, or a valuation should be placed upon them under its direction. But that liquidation was not necessarily a judicial proceeding, and judicial action with reference to it could not be invoked except for cause. It was there said:

"It is not a matter of course that a court of equity will interfere in the liquidation of the assets of a corporation or firm by a majority in interest. It is the right of the parties to conduct this part of their business for themselves. Before this right can be interfered with, it must be made to appear that the majority are assuming to exercise powers not conferred upon them, or are proceeding in a manner not authorized by law."

Then, further along, it is said:

"The majority are trustees, with not only the power, but also the positive duty, to liquidate the assets;" and having determined in good faith to negotiate a sale, and for a reasonable price, there is "no equity in the claim of a dissatisfied minority that the trust should be administered in accordance with their views and against the wishes of the majority;" that, "the sale being one the majority have power to make, and being free from all taint of fraud or irregularity, a court of equity will not interfere unless there be such inadequacy of price as to amount to proof of gross mismanagement." 76 N. H. 366, 367, 82 Atl. 1021 (Ann. Cas. 1913A, 366).

With these views we fully agree; and we are also of the opinion that the majority, having in the exercise of an honest business judgment voted to sell the assets of the Jackson Company for $585,000, and the assumption of its debts and liabilities, amounting to $1,522,679.61, and having fixed, as above stated, the price which a dissenting stockholder was to receive for each right held by him in the assets of the Jackson Company at $975, could not be said to have determined upon a value that was so inadequate as to amount to proof of gross mismanagement; that in a transaction of this magnitude the difference in value as fixed by the majority, and as found by the masters, is so slight that it is quite as probable the valuation was correct as that it was erroneous; that it discloses, if anything, nothing more than an error of judgment, and would not authorize a finding of gross mismanagement.

The other questions raised by the respondents' assignments of error are of minor importance, in view of the conclusions here reached, and we pass them by. It is to be observed, however, that inasmuch as the offer of the American Trust Company was to expire in one year from June 8, 1911, and may not have been renewed, the injunction granted in this case should be so modified as to make it conditional upon the payment to the complainants of $975 a share, instead of $3,228.13.

The decree of the District Court is reversed, and the case remanded to that court, with directions to enter a decree or decrees dissolving the injunction and dismissing the bill with costs to the respondents, appellants, upon payment, or the giving of security by them, in such form as the District Court may approve, for the payment to the complainants, appellees, mentioned in the third paragraph of the decree hereby reversed, of the sum of $975 for each and every share of stock in the Jackson Company held by said complainants, appellees; and said appellants recover their costs of appeal.

PUTNAM, Circuit Judge (dissenting). The opinion of the court necessarily plants itself for its support solely on the action of the stockholders of the Jackson Company, at a meeting where they voted to exchange the stock of the Jackson Company for shares of stock in the other corporation. No other corporate action was taken. This, in the prior opinion of the court in this same case, was held to be ultra vires, and therefore void, and so goes for nothing. The report of the masters, which subsequently followed the prior opinion of this court, fixed alternative values for the shares of stock of the Jackson Company, at alternative dates. It was strictly in accordance with the prior action of this court that one of those amounts should be accepted as the value the dissenting stockholders should receive. On the other hand, two judges of the court having changed since the first hearing, the views expressed by the court in the first opinion, though not formally thus ruled, have been repudiated, and the action of the majority of the stockholders, which we then held to be invalid, has been made the basis of the present final judgment.

As all the facts upon which the court now relies appeared by the record when the case was first heard, the judges who united in the first judgment thus became chargeable with the useless and vain and expensive and troublesome prolongation of the litigation. The judgment now entered might just as well have been entered as the result of the earlier hearing, if the court, as then constituted, had deemed it proper.

The rule which the court now applies is a wholesome rule when applied to proper circumstances; but it involves a lawful action of the corporation at a meeting duly held, when everybody, including the minority and majority, may have a proper hearing, and a consequent action, of a quasi judicial character, on the specific proposition offered for adoption. Such a meeting was had; but no proposition for sale of shares of stock in the corporation for cash was offered or adopted. Subsequently an offer was made by the American Trust Company of a price per share which the court now fixes, which, under the circumstances, was an unreasonable amount to obtain for it. As a result, what happened was a force-put, by which the minority stockholders

were forced to fix a price for stock which is below any admitted value for it, and far below that which the minority shareholders claim. At any rate, the price now fixed is an artificial and arbitrary one, admittedly varying from the real value, although claimed to be but little less than the real value. This comes about by the force of the power of the majority, instead as the result of a deliberate consultation after a conference among all shareholders where all might be heard.

Notwithstanding the fact that the rule referred to would be binding in reference to a reasonable proposition where all are consulted, followed by a formal vote of sale for cash, even though a minority did protest it, the rule sought to be applied here has no relation to proceedings of the character which in fact occurred; but it can apply only as a result of regular proceedings with reference to a vote for a sale for cash at a lawful meeting, as to which there might be full consultation, even though no complete concurrence. Under the circumstances, the position is an open one for a sale to be fixed by the court at a reasonable price, of the kind indicated by the prior opinion at several points, namely, the "intrinsic value."

(217 Fed. 355)

FULKERSON et al. v. SHAFFER et al.

(Circuit Court of Appeals, Eighth Circuit. September 10, 1914.)

No. 4181.

1. BANKRUPTCY (§ 58*)—ACT OF BANKRUPTCY—PREFERENCES—CONVEYANCE TO HINDER AND DEFRAUD CREDITORS.

Where an alleged bankrupt, who was cashier and stockholder of an insolvent bank, while insolvent and subject to a double liability on his stock in the bank to the bank commissioner, after the bank had been taken possession of by the commissioner, executed a note for the full amount of such double liability, secured by a mortgage on nonexempt real property, with intent to prefer the commissioner over his other creditors, he thereby committed an act of bankruptcy, and was properly adjudicated a bankrupt.

[Ed. Note.—For other cases, see Bankruptcy, Cent. Dig. §§ 57, 72–79, 83; Dec. Dig. § 58.*]

2. BANKRUPTCY (§ 58*)—PREFERENCES.

Under Bankr. Act July 1, 1898, c. 541, § 3a, 30 Stat. 546 (U. S. Comp. St. 1913, § 9587), providing that "acts of bankruptcy by a person shall consist of his having * * * (2) transferred, while insolvent, any portion of his property to one or more of his creditors with intent to prefer such creditors" over others, a transfer to a trustee for creditors will be treated as if made direct to the creditors.

[Ed. Note.—For other cases, see Bankruptcy, Cent. Dig. §§ 57, 72–79, 83; Dec. Dig. § 58.*]

Appeal from the District Court of the United States for the Western District of Oklahoma; John H. Cotteral, Judge.

Petition by A. H. Shaffer and others against Martin M. Fulkerson and others. From an order adjudging Fulkerson a bankrupt, he and J. D. Lankford, as Bank Commissioner, appeal. Affirmed.

---

*For other cases see same topic & § NUMBER in Dec. & Am. Digs. 1907 to date, & Rep'r Indexes

Charles West, Atty. Gen., and Joseph L. Hull, Asst. Atty. Gen., of Oklahoma, for appellants.

G. H. Buckman, of Winfield, Kan., Sam K. Sullivan, of Newkirk, Okl., and S. C. Bloss, of Winfield, Kan., for appellees.

Before SANBORN and SMITH, Circuit Judges, and TRIEBER, District Judge.

SMITH, Circuit Judge. [1] A petition was filed in the District Court to have Martin M. Fulkerson adjudged an involuntary bankrupt. The petition contained the following:

"That within four months preceding the filing of this petition, viz., on the 9th day of August, 1913, the said Martin M. Fulkerson, while insolvent, committed an act of bankruptcy, in that he did on said date execute and deliver a certain mortgage deed to J. D. Lankford, bank commissioner of Oklahoma, and his assigns and legal representatives, wherein to secure the payment of a note for $13,900 of said date, due one year thereafter, he mortgaged the southwest quarter (S. W. ¼) of section nine (9), all in township twenty-seven (27), range fourteen (14) west, in Woods county, Oklahoma, subject only to a prior mortgage of $6,500; that said real estate above described was non-exempt, and was not transferred in the due course of business, and was not transferred for a valuable consideration, but that said transfer was made by the said Martin M. Fulkerson while insolvent as aforesaid, with intent to prefer the said J. D. Lankford, bank commissioner, over his other creditors, and with intent to hinder, delay, and defraud the creditors of the said Martin M. Fulkerson; that said real estate mortgage was filed for record in the office of the register of deeds of Woods county, state of Oklahoma, August 9, 1913, at the hour of 4:15 o'clock p. m."

Martin M. Fulkerson and J. D. Lankford, bank commissioner, both filed answers, admitting the execution of the mortgage to Lankford, bank commissioner, but denying any act of bankruptcy. The parties made an agreed statement of facts, upon which the case was submitted, and resulted in an adjudication of bankruptcy, from which Mr. Fulkerson and Mr. Lankford, bank commissioner, appeal.

It appears that Mr. Fulkerson was cashier and stockholder to the amount of $13,900 of the Alva Security Bank, a banking corporation of the state of Oklahoma, and on August 9, 1913, the bank commissioner of Oklahoma declared the bank insolvent and took possession thereof, and on the same day took the note and mortgage referred to in the petition in bankruptcy. Two days later, but in pursuance of an agreement made on August 9th, the acting bank commissioner made a contract with the Central State Bank of Alva that it should assume all the liabilities of the defunct Alva Security Bank in consideration of certain specified assets of the Alva Security Bank and $97,199.79 in state banking board warrants. Among other things the stipulation contained the following provision:

"Party of the first part also agrees to immediately deliver to the party of the second part one certain note and mortgage securing same of $13,900, signed by M. M. Fulkerson and Sara H. Fulkerson, and the same to be applied in the same manner as all other double liability assessments which are collected."

The statutes of Oklahoma provide for the appointment of one bank commissioner by the Governor, by and with the consent of the senate,

and the appointment of a number of assistants, and they also provide for the usual double liability of stockholders in banks; but this provision is not specific as to who shall collect such liability. All references to the Oklahoma statutes are to the Harris-Day Code.

Section 298 creates the state banking board. Section 299 provides for a depositors' guaranty fund by assessment on the banks of the state. Section 300 provides for replenishing the fund when depleted. Section 302 provides that, whenever the bank commissioner shall become satisfied of the insolvency of any bank, he may, after due examination of said bank and its assets, proceed to wind up its affairs and enforce the personal liability of the stockholders, officers, and directors. Section 303 provides that, in the event the bank commissioner takes possession of any bank, the depositors shall be paid in full, and when the cash available, or that can be made immediately available, is not sufficient, the said banking board shall draw from the depositors' guaranty fund and from additional assessments, if required, the amount necessary to make up the deficiency, and the state shall have, for the benefit of the depositors' guaranty fund, a first lien upon the assets of the bank and all liabilities against the stockholders, officers, and directors of said bank.

When this bank was taken possession of by the bank commissioner under section 302, he was authorized under the same section to collect the double liability of Fulkerson, and that liability and his other liabilities made him insolvent. Although his liability was under the statute of Oklahoma, it was contractual in character. Richmond v. Irons, 121 U. S. 27, 55, 7 Sup. Ct. 788, 30 L. Ed. 864; Stuart v. Hayden, 169 U. S. 1, 8, 18 Sup. Ct. 274, 42 L. Ed. 639; Matteson v. Dent, 176 U. S. 521, 20 Sup. Ct. 419, 44 L. Ed. 571. And his liability became fixed from the date of insolvency of the bank. Stuart v. Hayden, 169 U. S. 1, 8, 18 Sup. Ct. 274, 42 L. Ed. 639. But in this case Mr. Fulkerson settled all questions as to his liability by giving to the bank commissioner his note for the full amount of his double liability. This liability upon this note was clearly contractual, even if his liability had previously not been so. For what was this note given? It was in effect stated in the contract between the bank commissioner and the Central State Bank of Alva that it was given to represent his double liability. It is said that the—

"mortgage was given in consideration of Fulkerson's liability to the bank commissioner for advances to be made by him out of the depositors' guaranty fund to pay the depositors of the failed bank."

On the other hand, it is expressly agreed:

"That said bank commissioner demanded from said Fulkerson payment of his liability as stockholder, and said Fulkerson delivered, in compliance with said demand, said note and mortgage."

As the law provided for the double liability, and as section 302 clothes the bank commissioner with authority to enforce the liability, and he demanded its payment, and in compliance therewith Fulkerson gave the note and mortgage, there seems no basis for the claim that he gave it solely for his liability to the bank commissioner for ad-

vances to be made by him out of the depositors' guaranty fund which it was obligatory upon the state banking board to make under section 303. Nor does the fact that section 303 gave to the state, for the benefit of the depositors' guaranty fund, a first lien upon all liability against the stockholders, change this result, or make the transfer solely for the purpose claimed by appellants.

[2] Under the Oklahoma statute he owed Lankford, as bank commissioner; but, even if he did not, Lankford took the mortgage as trustee, and the giving of a mortgage to a trustee for a creditor, instead of direct to the creditor, cannot take it out of the plain terms of the bankruptcy statute, which are:

"Sec. 3.—a Acts of bankruptcy by a person shall consist of his having * * * (2) transferred, while insolvent, any portion of his property to one or more of his creditors with intent to prefer such creditors over his other creditors."

This is a proceeding in equity, and under this statute a transfer to a trustee for the creditors would be treated as if made direct to the creditors. If Fulkerson, to secure his double liability, upon which a cause of action had already accrued to the bank commissioner, gave this note and mortgage to secure such double liability, the mere fact that the state law gave a lien in favor of the state for the depositors' guaranty fund upon the double liability made the double liability no less a liability of Fulkerson, and if the mortgage was in part to secure the state for its advances it would none the less subject Fulkerson to be adjudged a bankrupt under the section quoted.

The appellants seem to, in a measure, treat this case as if it were an action under section 60, clauses "a" and "b," to recover the mortgaged property as given in preference and even if their theory were sustained, upon which we express no opinion, the creditors of Fulkerson would none the less be entitled to have him adjudicated a bankrupt, because, if it be conceded that there was some other consideration for the mortgage, it will not be claimed that it did not secure his double liability, which already existed. He had therefore committed an act of bankruptcy under the section of the bankruptcy law quoted, and the decree is affirmed.

(217 Fed. 358)

MIDLAND GUARANTY & TRUST CO. v. DOUGLAS COUNTY et al.

(Circuit Court of Appeals, Eighth Circuit. September 10, 1914.)

No. 4182.

1. TAXATION (§ 572*)—NATURE OF LIABILITY—"DEBT."

Under the Nebraska law, taxes are not "debts," in the ordinary sense, and an action will generally not lie to recover them.

[Ed. Note.—For other cases, see Taxation, Cent. Dig. §§ 1132-1137; Dec. Dig. § 572.*

For other definitions, see Words and Phrases, First and Second Series, Debt.]

2. TAXATION (§ 507*)—TAXES ON PERSONAL PROPERTY—LIEN.

When taxes on personal property become delinquent in November of each year, as provided by Cobbey's Ann. St. Neb. 1911, § 10914, the tax

*For other cases see same topic & § NUMBER in Dec. & Am. Digs. 1907 to date, & Rep'r Indexes

becomes a lien, not only on the identical personal property taxed, but on all personal property of the taxpayer within the county.

[Ed. Note.—For other cases, see Taxation, Cent. Dig. §§ 937-941; Dec. Dig. § 507.*]

3. TAXATION (§ 573½*)—TAXES—"PERSONAL OBLIGATION"—ENFORCEMENT.

While, under the Nebraska law, each piece of real estate is liable only for the taxes assessed against it, and the owner is not personally liable therefor, the assessment of personal taxes is a "personal obligation" of the property owner, though he is not ordinarily subject to a suit to collect the same, because the statutes have provided another adequate and exclusive remedy.

[Ed. Note.—For other cases, see Taxation, Cent. Dig. §§ 1145, 1146; Dec. Dig. § 573½.*

For other definitions, see Words and Phrases, First and Second Series, Personal Obligation.]

4. TAXATION (§ 390*)—RAILROAD PROPERTY—ASSESSMENT—PERSONAL PROPERTY.

Where railroad property located in Nebraska was in the hands of a receiver, it was properly listed by him for taxation, and assessed as personal property, as provided by Cobbey's Ann. St. Neb. 1911, §§ 10927, 10985.

[Ed. Note.—For other cases, see Taxation, Cent. Dig. §§ 652-655, 658, 659; Dec. Dig. § 390.*]

5. RECEIVERS (§ 153*)—CLAIMS—TAXES—COLLECTION.

Where railroad property located in Nebraska was in the hands of a receiver, and was properly assessed for taxes as personal property, the railroad company being hopelessly insolvent, the taxes were collectible from the receiver, as provided by Cobbey's Ann. St. Neb. 1911, §§ 10915, 10937.

[Ed. Note.—For other cases, see Receivers, Cent. Dig. §§ 276, 277; Dec. Dig. § 153.*]

6. RECEIVERS (§ 153*)—CLAIMS—TAXES—COLLECTION.

Where a receiver of property of an insolvent railroad company was liable for taxes payable to the county, the proper method to collect the taxes was for the county to appear in the receivership case and pray for an order directing payment by the receiver.

[Ed. Note.—For other cases, see Receivers, Cent. Dig. §§ 276, 277; Dec. Dig. § 153.*]

Appeal from the District Court of the United States for the District of Nebraska; W. H. Munger and Thos. C. Munger, Judges.

Claim by the County of Douglas and others against Arthur English, as receiver of the property of the Nebraska Traction & Power Company and the Midland Guaranty & Trust Company, trustee, in mortgage foreclosure proceedings, to recover certain taxes. From an order directing the payment of the taxes, the trustee appeals. Affirmed.

H. C. Brome, of Omaha, Neb. (Clinton Brome, of Omaha, Neb., on the brief), for appellant.

Charles Haffke, of Omaha, Neb., for appellees.

Before SANBORN and SMITH, Circuit Judges, and TRIEBER, District Judge.

SMITH, Circuit Judge. This suit was commenced by the Carbon Timber Company against the Nebraska Traction & Power Company, hereafter called the Power Company, and the Midland Guaranty &

*For other cases see same topic & § NUMBER in Dec. & Am. Digs. 1907 to date, & Rep'r Indexes

Trust Company, to foreclose a lien for materials used upon the property of the Power Company. The Power Company is a railroad corporation organized under the laws of Nebraska, and owned an interurban railway located in Douglas and Sarpy counties in that state. Arthur English was appointed as receiver of the property of the Power Company on October 28, 1910. The Trust Company named held a mortgage on the railroad, and it filed a cross-bill asking foreclosure. On May 20, 1913, decree was entered finding the amount due on the mortgage to be $192,400, and the receiver was ordered to sell the property and that:

"The proceeds of such sale be applied to the payment of the outstanding receiver's certificates, costs of suit, certain liens adjudged by the court to be prior to the lien of said mortgage, and the residue of the proceeds of said sale, if any, to be applied toward the payment of the amount due upon the bonds secured by said mortgage."

The property was sold by the receiver for $110,000, and the sale was confirmed by the court on July 5, 1913. The money having been paid, said receiver on August 15, 1913, executed a deed and delivered possession of the property. Pursuant to the order of May 20, 1913, the receiver had on November 1, 1913, paid upon receiver's certificates $71,941.35. On November 20, 1913, the court ordered the receiver to pay the balance in his hands on the liens adjudged paramount to the mortgage and the other liens and costs. By February 13, 1914, the said receiver had paid upon the liens adjudged to be prior to the mortgage the sum of $12,908.37, and had also paid a dividend of 12 per cent. upon the bonds secured by the mortgage. On the 15th day of April, 1913, the said receiver returned a schedule of such Power Company to the state board of equalization and assessment, and said board, having valued said property in the manner required by law, made its return of such value to the county clerks of the counties of Douglas and Sarpy, and the levy was such that the taxes due to the county of Douglas amounted to $710.85 and the amount due the county of Sarpy was $210.38. On the 10th day of November, 1913, said counties of Douglas and Sarpy demanded of said receiver the payment of said taxes from the funds in his hands, and the receiver applied to the court for its order and direction in the premises. The court found they should be paid, and the Midland Guaranty & Trust Company appealed to this court.

The following are excerpts from Cobbey's Annotated Statutes of Nebraska, edition of 1911:

"10911. All property in this state not expressly exempt therefrom, shall be subject to taxation, and shall be valued at its actual value which shall be entered opposite each item and shall be assessed at twenty per cent. of such actual value."

"10914. Taxes assessed upon personal property shall be a first lien upon the personal property of the person to whom assessed from and after the first day of November of the year in which they are assessed, until paid."

"10915. When property is assessed to any person as agent for another, or in a representative capacity, such person shall have a lien upon such property, or any property of his principal in his possession, for the taxes thereon until he is indemnified against the payment thereof, or, if he has paid the taxes, until he is reimbursed therefor."

"10927. Personal property shall be listed in the manner following: * * * Seventh. The property of corporations whose assets are in the hands of receivers, by such receivers."

"10937. If the property of any taxpayer be seized by legal process so as not to leave a sufficient amount exempt from levy and sale to pay the taxes, then the taxes on the property of such taxpayer shall at once fall due, and be paid from the proceeds of the sale of the property so taken on such process in preference to all other claims against it."

"10983. The property of railroads, railroad corporations and car companies, shall be annually assessed as prescribed in this act by the state board of equalization and assessment."

"10985. The board on the first Monday in May, 1904, and annually thereafter shall proceed to ascertain all property of any railroad company owning, operating or controlling any railroad or railroad service in this state, which for the purpose of assessment and taxation, shall be held to include the main track, side track, spur tracks, warehouse tracks, roadbed, right of way and depot grounds, and all water and fuel stations, buildings and superstructures thereon, and all machinery, rolling stock, telegraph lines and instruments connected therewith, all material on hand and supplies provided for operating and carrying on the business of such road, in whole or in part, together with the moneys, credits, franchises and all other property of such railroad company used or held for the purpose of operating its road, and appraise and assess the same as personal property as herein provided."

"11043. * * * No demand for taxes shall be necessary, but it shall be the duty of every person subject to taxation to attend at the treasurer's office and pay his taxes."

[1] Under the construction of the laws of Nebraska, by its Supreme Court, taxes are not debts in the ordinary sense, and generally an action will not lie to recover them. Richards v. Commissioners of Clay County, 40 Neb. 45, 58 N. W. 594, 42 Am. St. Rep. 650.

[2] When the time comes for a lien for personal property taxes, which is now on November 1st (section 10914), it attaches, not to the identical personal property taxed, but to all the personal property of the taxpayer within the county. Hill v. Palmer, 32 Neb. 632, 49 N. W. 718; Reynolds v. Fisher, 43 Neb. 172, 61 N. W. 695; Farmers' Loan & Trust Co. v. Memminger, 48 Neb. 17, 66 N. W. 1014; Foster & Smith Lumber Co. v. Leisure, 3 Neb. (Unof.) 237, 91 N. W. 556; Chamberlain Banking House v. Woolsey, 60 Neb. 516, 83 N. W. 729; Woolsey v. Chamberlain Banking House, 70 Neb. 194, 97 N. W. 241. But in Millett v. Early, 16 Neb. 266, 20 N. W. 352, it was held that while a suit will not ordinarily lie for taxes, a method exclusive of suit having been adopted by the Legislature for their collection, if the taxpayer dies and his property passes into the custody of the probate court, a claim for the taxes may be filed against the estate. The court said:

"The statute requires all claims against an estate, which are to be paid out of the general assets, to be filed and allowed; and as taxes upon personalty are to be collected from any personal property of the person against whom they are assessed that can be levied upon, they certainly constitute a claim against the estate. While such taxes are not a debt, in the ordinary meaning of the word, they do constitute an obligation imposed by law, for which the estate is liable. This being so, the claim was properly allowed against the estate."

In Toy v. McHugh, 62 Neb. 820, 87 N. W. 1059, it was held that a land tax created no personal liability against the owner of the land; that such tax must be collected, if at all, by a sale of the particular

tract against which it is charged and upon which it is by the statute made a specific lien.

[3] It thus appears, while each piece of real estate is liable only for the taxes upon it, and the owner thereof is not personally liable therefor, the personal taxes become a personal obligation of the owner, but do not subject the owner ordinarily to a suit, not because he is not liable, but because, the law having provided adequate means for their collection, that remedy is exclusive.

[4] The railroad was properly assessed as personal property under the express provisions of section 10985. Under section 10927 the railroad was properly listed by the receiver in the spring of 1913.

[5] The statute has not been construed as to whether this section means that railroads in the hands of receivers shall be assessed to the receivers as owners, and there is nothing in this case to show how this railroad was in fact assessed for 1913, whether to the railroad company or to the receiver. If the railroad was legally assessed to the receiver as owner, as this was a tax on personal property, it was not only a lien upon all personal property of the receiver as such, but was a personal claim against him as receiver.

It is conceded that the railroad, having been sold before November 1st, was free of the lien of the taxes for that year; and as the railroad company is hopelessly insolvent, if the railroad was assessed to the railroad company, the entire taxes must be lost to the counties, unless they are collectible from the receiver under some of the provisions of the statute referred to. We conclude that they were so collectible under sections 10915 and 10937.

[6] If the receiver was liable for these taxes, then the proper proceeding was to appear in the receivership case and ask an order for their payment. In re Tyler, 149 U. S. 164, 186, 187, 13 Sup. Ct. 785, 37 L. Ed. 689.

The decree of the District Court is affirmed.

(217 Fed. 362)

FARMERS' OIL & GUANO CO. v. DUCKWORTH CO.

(Circuit Court of Appeals, Fifth Circuit. October 5, 1914.)

No. 2552.

1. COURTS (§ 280*)—FEDERAL COURTS—DETERMINATION OF QUESTIONS OF JURISDICTION.

In a federal appellate court, the question of the jurisdiction of that court, and of the trial court, must be determined, whether raised by the parties or not.

[Ed. Note.—For other cases, see Courts, Cent. Dig. §§ 816–818; Dec. Dig. § 280.*]

2. COURTS (§ 280*)—FEDERAL COURTS—JURISDICTION—HOW SHOWN.

In the federal courts, jurisdiction must affirmatively appear in the record.

[Ed. Note.—For other cases, see Courts, Cent. Dig. §§ 816–818; Dec. Dig. § 280.*]

---

*For other cases see same topic & § NUMBER in Dec. & Am. Digs. 1907 to date, & Rep'r Indexes

3. COURTS (§ 322*)—JURISDICTION OF FEDERAL COURTS—CITIZENSHIP OF CORPORATION—SUFFICIENCY OF ALLEGATION.

Allegations, in the petition in an action in a federal court, that plaintiff is a "corporation of New Jersey" and defendant is a "corporation of Georgia," are not the equivalent of allegations that the corporations were organized under the laws of such states, and are not sufficient to show the requisite diversity of citizenship to give the court jurisdiction.

[Ed. Note.—For other cases, see Courts, Cent. Dig. §§ 876–881, 887; Dec. Dig. § 322.*

Diverse citizenship as a ground of federal jurisdiction, see notes to Shipp v. Williams, 10 C. C. A. 249; Mason v. Dullagham, 27 C. C. A. 298.]

In Error to the District Court of the United States for the Southern District of Georgia; Emory Speer, Judge.

Action at law by the Duckworth Company against the Farmers' Oil & Guano Company. Judgment for plaintiff, and defendant brings error. Reversed.

This is a suit brought to recover damages for breach of contract of sale of cotton for future delivery. In the petition commencing the suit the plaintiff below, as to jurisdiction, alleged as follows:

"First. That it is a corporation of the state of New Jersey, and was a corporation of the said state at the times hereinafter mentioned.

"Second. Your petitioner shows that the Farmers' Oil & Guano Company is a corporation of the state of Georgia, now having its principal place of business at Sandersville, in the county of Washington, in said state, within said circuit and district, and had its principal place of business therein at the times hereinafter mentioned, and is hereinafter called the defendant."

The petition further averred that among other objects for which the defendant was incorporated was buying and selling seed or lint cotton, and that on the 18th day of September, 1909, the said defendant through its president sold to petitioner 300 bales of cotton, basis good middling at 12⅝¢ f. o. b. Savannah, October shipment, a copy of the memorandum of sale being as follows:

"Savannah, Ga., September 18, 1909.

"Messrs. The Duckworth Company, Savannah, Georgia—Dear Sirs: We confirm the sale to you of 300 bales, basis good middling, at 12⅝ cents, f. o. b. Savannah, October shipment, weights and grades to be determined in Savannah, subject to the rules of the Savannah Cotton Exchange, weights to be fifty thousand pounds per hundred bales 5% more or less.

"Yours very truly, Farmers' Oil & Guano Co.,
"J. C. Cooper, Pres't."

The petition further alleges:

"Fifth. Your petitioner further shows that on the 21st of October, 1909, the said defendant, through its president, J. C. Cooper, agreed to sell said contract of sale with your petitioner on a cash basis at market differences on or before the last day of October, 1909, in lieu of shipping the cotton as per contract, a copy of said agreement being as follows:

" 'Savannah, Ga., October 21, 1909.

" 'Messrs. The Duckworth Company, Savannah, Georgia—Dear Sirs: Referring to our contract with you, dated September 18/09, for three hundred (300) bales at 12⅝¢, basis Gd. Midd., f. o. b. Savannah, we now beg to confirm conversation held this morning between the writer and your Mr. M. M. Hopkins, wherein it was agreed that we are to settle this contract with you on a cash basis at market differences on or before the last day of October, 1909, in lieu of shipping the cotton as per contract. Payment in cash to be made on day we agree upon for settlement. Settlement to be made at the average weight of fifty thousand pounds per one hundred bales.

" 'Very truly yours, Farmers' Oil & Guano Co.,
" 'J. C. Cooper, Pres't.'

*For other cases see same topic & § NUMBER in Dec. & Am. Digs. 1907 to date, & Rep'r Indexes

"Sixth. Your petitioner further shows that the loss on said cotton, through the failure of said defendant to deliver the same as agreed on, was the sum of three thousand one hundred and eighty-seven and $^{50}/_{100}$ dollars ($3,187.50), besides interest from the 30th day of October, 1909, whereby said defendant became indebted to your petitioner in the said sum of three thousand one hundred and eighty-seven and $^{50}/_{100}$ dollars ($3,187.50), besides interest as aforesaid."

The defendant by answer admitted the contract of the sale of cotton for future delivery but denied liability for the sale on the ground that it was a wagering contract, and further that the plaintiff had suffered no damages whatever by the breach of the contract.

Upon this defense coming in, the plaintiff amended his petition by adding the following paragraph, to wit: "Petitioner further shows that said defendant has acted in bad faith, has been stubbornly litigious, and has caused the plaintiff unnecessary trouble and expense, whereby petitioner is entitled to recover expense of the litigation and his reasonable attorney's fees."

The case came on for trial, and thereon verdict was directed in favor of plaintiff in the amount claimed, but leaving to the jury the question as to whether the plaintiff could recover for attorney's fees on account of stubborn and litigious defense claimed. In the assignment of errors in this case, special stress is laid upon excess of damages as instructed by the court and the allowance of counsel fees as found by the jury, but no question of jurisdiction is presented.

Alexander Akerman, Charles Akerman, and John R. Cooper, all of Macon, Ga., for plaintiff in error.

George W. Owens, of Savannah, Ga., for defendant in error.

Before PARDEE and SHELBY, Circuit Judges, and FOSTER, District Judge.

PARDEE, Circuit Judge (after stating the facts as above). [1] Although not questioned in the District Court, nor by assignment of error in this court, the jurisdiction of the District Court is the real question now to be determined. In Morris v. Gilmer, 129 U. S. 315–326, 9 Sup. Ct. 289, 292 (32 L. Ed. 690), our duty is clearly declared as follows:

"On every writ of error or appeal, the first and fundamental question is that of jurisdiction, first of this court, and then of the court from which the record comes. This question the court is bound to ask and answer for itself, even when not otherwise suggested, and without respect to the relations of the parties to it."

[2] It is well settled in the federal courts that jurisdiction must affirmatively appear in the record. See Morris v. Gilmer, supra, and the cases there cited. This proposition has been announced and acted upon in very many cases in this court, and we announce it again for the information of the bar of this circuit.

[3] In this case, the sole showing of the diverse citizenship necessary to confer jurisdiction on the District Court is in substance the averments that the plaintiff is a corporation of the state of New Jersey and that the defendant is a corporation of the state of Georgia. A suit brought by a private corporation is practically a suit brought by all the stockholders of such corporation, and to give jurisdiction to the federal courts facts must be so specifically and sufficiently averred that the court on the record can conclusively presume that all the stockholders

of the plaintiff or defendant corporation are citizens of the particular state wherein the corporation claims citizenship.

In American Sugar Refining Company v. Johnson, 60 Fed. 503, 9 C. C. A. 110, this court, reviewing adjudged cases, considered the sufficiency of the showing necessary to confer jurisdiction on the federal court in suits by or against private corporations, and therein held that an averment that "the American Sugar Refining Company, a corporation domiciled and doing business in this city [New Orleans] and a citizen of New Jersey, and found within the Eastern district of Louisiana, and authorized to accept service of legal process, is indebted," etc., was insufficient, and the opinion concludes:

> "From these considerations and authorities we conclude that in a suit for or against a corporation in the courts of the United States the matter of jurisdiction may be shortly stated as follows: That, in order to hold that a private corporation is a citizen of a particular state, within the meaning of the word 'citizen' as used in the judicial acts of the United States, and thereby conclusively presume that all of the shareholders of such corporation are citizens of the particular state, it must affirmatively appear that the corporation was created under the laws of such state; and it would seem that an averment that the body suing or sued is a corporation or a citizen or both of a particular state is insufficient."

See cases cited and Curtis on Jurisdiction, pp. 145–148; St. Louis & San Francisco Ry. Co. v. James, 161 U. S. 545, 562, 16 Sup. Ct. 621, 40 L. Ed. 802.

It may be noticed that, in further disposing of American Sugar Refining Co. v. Johnson, we said:

> "This conclusion is sufficient to reverse the case; but, as the error in question may be cured by amendment in the court below, and the case retried, we proceed to consider the other assignments of error."

In the present case, identical in this particular aspect, we intended following much the same course; but as the judges were not all of the same mind as to the sufficiency of the assignments of error in relation to damages, and as the lamentable death of Judge Shelby has intervened, necessarily changing the personnel of the court, and as on sufficient averments and a new trial the precise questions may not again arise, we pretermit all further discussion of the case.

The judgment of the District Court is reversed, and the cause is remanded, with instructions to dismiss the same, unless by proper and sufficient averments the jurisdiction of the court shall be shown, in which case a new trial may be awarded.

(217 Fed. 366)

CITY OF HARRISBURG v. NEW YORK CONTINENTAL JEWELL FILTRATION CO.

(Circuit Court of Appeals, Third Circuit. September 14, 1914.)

No. 1807.

1. PATENTS (§ 328*)—INFRINGEMENT—FILTRATION PLANT.
The Jewell reissue patent, No. 11,672, for a filter for municipal or other large waterworks plants, and the Jewell patent, No. 644,137, for the method of purifying water by the use of such filters, *held* not infringed, on uncontradicted evidence that experiments conducted during six months with the alleged infringing filters in use by defendant city, while being operated in the customary manner, failed to show the characteristics claimed to be inseparable from the operation of the patented apparatus and method.

2. WORDS AND PHRASES—"POSITIVE HEAD"—"NEGATIVE HEAD."
"Positive head," as used in connection with a filtration plant, means the weight of the water both within and above the sand bed, and is usually measured from the controller or the under drainage system to the surface of the water to be filtered. "Negative head," used in the same connection, means the force that comes into play when a partial vacuum is created either within or below the filter bed.

3. WORDS AND PHRASES—"EFFECTIVE SIZE."
Sand of "effective size," as used in connection with a filtration plant, means sand containing 10 per cent. by weight that is finer in grain than the diameter sought to be secured.

Appeal from the District Court of the United States for the Middle District of Pennsylvania.

Suit in equity by the New York Continental Jewell Filtration Company against the City of Harrisburg. Decree for complainant, and defendant appeals. Reversed.

For opinion below, see 208 Fed. 10.

M. W. Jacobs, of Harrisburg, Pa., for appellant.

James I. Kay, of Pittsburgh, Pa., for appellee.

Before HUNT and McPHERSON, Circuit Judges.

HUNT, Circuit Judge. [1] The New York Continental Jewell Filtration Company, plaintiff herein, and hereinafter to be called the filtration company, brought suit against the city of Harrisburg, defendant in the court below and appellant here, alleging infringement of reissue letters patent upon a filter and of letters patent upon a method of purifying water, both alleged to be the invention of O. H Jewell, and praying for an injunction and accounting. Defendant denied the validity of the patents and infringement of them. After trial, it was decreed by the District Court that the patents were valid, and that the claims had been infringed. Injunction and accounting were ordered, and from such decree the city of Harrisburg has appealed.

Claim No. 2 of the reissue patent involved is as follows:

"(2) A filter consisting of a filter tank, a pure-water pipe communicating with the lower portion thereof, a granular filter bed in said tank, the lower portion of said filter bed being compacted more closely than the upper por-

*For other cases see same topic & § NUMBER in Dec. & Am. Digs. 1907 to date, & Rep'r Indexes

tion thereof, means for maintaining a partial vacuum in said filter bed during filtration, and means for reversing the flow of water through said filter bed, substantially as described."

The three claims involved in the method patent are as follows:

"(1) The method of purifying water, which consists in passing the impure water through a granular filter-bed having an exposed filtering-surface, and at the same time applying suction from below, substantially as described.

"(2) The method of purifying water, which consists in passing the impure water downward through a granular filter-bed of gradually-increasing compactness from the top downward, and at the same time applying suction from below, substantially as described.

"(3) The method of purifying water, which consists in passing the impure water through a granular filter-bed having an exposed filtering-surface, and at the same time extracting from the water by suction and retaining within the filter-bed a greater or less portion of the air contained in the water, substantially as described."

The invention disclosed by the patents in suit has reference to atmospheric filters, filters in which, by the creation of a partial vacuum within or below the filtering material, atmospheric pressure above the liquid to be filtered is rendered effective to force it through the filtering material.

There are two general types of such filters: The slow sand, or English, filters, and the rapid, mechanical, or American, filters. Of the latter, some use pressure, and some use gravity; the Jewell filter belonging to the gravity class. Essentially the bed of each type is of a granular material, usually sand, exposed to the air and resting upon gravel; the gravel containing a system of small pipes which collect the filtered water and deliver it into a large outflow pipe connecting with the distributing system. In both types, less water actually passes through the bed than its full capacity; the rate of flow is determined, not only by the type, but also by such conditions inter alia as the turbidity of the unfiltered water, the amount and kind of bacteria, and the quantity of water needed for use. The quantity is regulated by rate-controllers, devices which are in practically universal use. The slow sand filters deliver from 2,000,000 to 10,000,000 gallons per acre per day, and the bed is deeper and of finer sand. They use no coagulant, and are cleaned by scraping at infrequent intervals. The rapid gravity filters will deliver from 100,000,000 to 150,000,000 gallons per acre per day, and their beds are shallower and coarser; they use a coagulant and are cleaned frequently by reverse washing.

After a slow sand filter has been in use for a short time, various substances, bacteria, etc., accumulate on the surface, forming a sticky coating that lessens the spaces, or voids, between the grains of sand, and thus helps to retain the impurities that are suspended in the water. Some chemical action also takes place (oxidation, etc.), and this aids the process of purification. In a rapid or mechanical filter, however, the water passes through the bed so quickly that such a coating has little time to form out of natural materials, and certain coagulants are therefore added to produce an artificial coating. A coagulant often used is sulphate of aluminum, which in alkaline waters soon produces a flocculent substance that permeates the water and afterwards the

bed, and detains much of the suspended impurity. This flocculent matter is sticky and reduces the pore-spaces between the grains of sand. These rapid filters need cleaning frequently (as often as once a day, or even oftener), and this is accomplished by draining off the coagulated water down to a certain level, and then injecting from below a stream of clean water. This water disturbs the sand thoroughly and carries off the impurities that have accumulated in the bed. The process of washing by an upward current is usually assisted by mechanical agitation, as by arms or rakes, or by forcing a blast of air up through the bed.

[2] Several matters should be briefly alluded to. "Positive head" means the weight of the water both within and above the sand bed, and is usually measured from the controller or the underdrainage system to the surface of the water to be filtered. "Negative head" is the force that comes into play when a partial vacuum is created either within or below the filter bed. Under usual conditions, negative head cannot begin to operate until the bed becomes somewhat clogged with material. A gravity filter may operate exclusively by positive head, and all gravity filters use such a head to some extent; but a negative head filter uses both kinds of head, and is therefore provided with some means for producing a partial vacuum within the bed. This may be a pump, a trapped pipe, or some equivalent device. The trapped pipe may drop below the bed, thus adding to the total available head; or it may lead away horizontally at the bottom of the bed.

[3] Sand of "effective size" means sand containing 10 per cent. by weight that is finer in grain than the diameter sought to be secured. The ideal sand would have all its grains of uniform size, but, as this cannot be attained, the size is "effective," if about 10 per cent. by weight is finer. It is also true that some percentage of the grains is larger than the particular diameter aimed at. In all municipal filtration plants, careful provision is made for preliminary treatment of the water before actual filtering begins. This consists either of sedimentation or coagulation, or of both, and thus a certain quantity of suspended impurities is removed, and the filters proper are relieved from much of the work they would otherwise have to do.

In the specification accompanying the apparatus patent of 1895, and also in the specification accompanying the reissue, the invention involved in the present suit is described generally as follows:

"This invention relates to improvements in 'gravity-filters' of the kind adapted for filtering large masses of water, and which are provided with a power-driven agitator for stirring up the filtering material during the process of washing and cleansing the same. The object of the invention is to provide a filter having the highest efficiency, and which can be constructed and operated at minimum cost, for material and labor. The invention consists, briefly, in combining a filter and subsiding-chamber in one tank or vessel occupying but one foundation, and so constructed and arranged relatively that the accumulation of sediment in the subsiding-chamber may be conveniently removed and driven out therefrom by mechanical appliance and without other power or machinery than that found in connection with the agitator, which is thus utilized for this purpose. The invention further consists in the novel features of construction, combination, and arrangement of parts hereinafter described and set forth; reference being had to the accompanying drawings."

A description of the device is then given, in which a filtered-water pipe leading to the reservoir outside the tank is referred to. The specification then goes on:

"* * * Said pipe is provided with a water-trap *9*. Said filtered-water pipe is extended some distance below the filter-tank to form a downdraft by removing the air-pressure from the under side of the filter-bed, and thus to make effective the air-pressure upon the water above said bed, and said trap is for the purpose of sealing the lower end of said filtered-water pipe to prevent the air from entering therein above said trap when the flow and velocity of water down the pipe is diminished by the accumulation of impurities in the bed."

In the paragraph just quoted appears the only reference to the presence and effect of a partial vacuum in the filter-bed; the vacuum being caused by the trap in the downdraft pipe. The single claim of the original patent referred to the subject (if at all) only by the implication of the italicized phrase:

(1) "In a filter the combination of a filter tank, a subsiding tank, and a filter material holding tank, *formed as described*, with a central communicating passage or opening between said tanks, an agitator for said filter, the shaft of which passes through said central opening, and projects into said subsiding chamber, and a pipe elbow rigidly secured to said shaft, and adapted to be rotated thereby, to give force and direction to the water passing down through said central opening and elbow, for flushing out and removing the sediment from said subsiding chamber, substantially as set forth."

But, when the reissue was applied for, this subject of partial vacuum was so expanded and emphasized as to become much the most important, as will appear from the following quotation of new matter in the specification:

"As soon as the water passes into the filter-tank from the subsiding-tank it begins to percolate through the sand or other granular material composing the filter-bed, and after passing through the bed is carried off by the filtered-water pipe *8*. When a continuous flow of water is secured through the filtered-water pipe *8*, the downdraft exerted by the column of water in said pipe creates and maintains a partial vacuum in the filter-bed; the vacuum being greatest in the lower portion of the bed. The granular filtering material is consequently compacted by atmospheric pressure, the lower part of the bed being compacted more closely than the upper part; the degree of compactness gradually diminishing toward the upper surface of the bed. As the result of this condition of the filter-bed, the impurities carried by the water to be filtered are not all collected at the surface of the bed, forming a crust or substantially impervious stratum, as is the case where granular filter-beds of substantially uniform density are used without suction, but only a part of the impurities are removed at the surface; a great portion of the suspended matter, by reason of its being in a more finely-divided state, being permitted to pass the more widely-separated granular particles in the upper portion of the bed to be intercepted afterward by the more closely-compacted particles in the lower portion of the bed. Furthermore, by employing the downdraft, as above described, the upper portion of the filter-bed, which usually contains a comparatively large proportion of the impurities, may be agitated by means of the agitators without interrupting the process of filtration, inasmuch as the lower portion of the bed is maintained in a compact state by the downdraft, preventing the passage of the impurities freed by the agitation of the upper portion of the bed, the partial vacuum maintained by the downdraft acting to prevent the agitation of any part of the bed except that which is directly operated upon by the agitators.

"In prior filters, where a loose granular filter-bed was used, it was impracticable to agitate the filter-bed during filtration, because, as soon as the upper crust of the bed was broken by the agitation, the impurities would at once be permitted to pass entirely through the bed and be carried off in the filtered water. In my improved filter the agitation of the bed may be repeated as often as may be desired, or it may be continuous, thereby permitting the mass of the impurities to penetrate further into the bed until the entire bed becomes saturated with impurities, when it is necessary to wash the bed, as will be hereinafter described.

"It will be evident from the above description that a filter constructed, as herein described, is capable of use without washing for a much longer period of time than prior constructions, thereby effecting a great saving both in labor and in the water used for washing. Furthermore, the capacity of the filter is greatly increased, as by distributing the impurities more or less uniformly throughout the bed, and preventing the formation of a thick crust at the upper surface, the water is caused to pass much more rapidly through the bed without interfering with successful filtration.

"The maintaining of a partial vacuum in the filter-bed, as above described, further improves the operation of the filter and increases its efficiency by effecting the coagulation of the suspended impurities; such coagulation being effected by the separation and concentration of the air contained in the water under filtration, thus increasing the bulk of such impurities and enabling the filter-bed to intercept and retain them. The air separated from the water remains to a great extent in the filter-bed, and is especially useful in washing the bed, as when the current of water is reversed in washing, as hereinafter described, the air rising through the filter-bed causes a violent agitation thereof, liberating the accumulated impurities and permitting them to be carried up with the wash-water to the overflow. (In filters of this class daily washing is usually required, while the sediment in the subsiding-chamber may accumulate for a month or more before its removal is necessary. The daily wash is performed by closing the valve to the subsiding-chamber, filtering the water down, closing the valve in the pure-water pipe, and opening connection therewith to the wash-water, stand-pipe, or pump, forcing the water up through the filter-bed, during which the agitator is kept in motion and the washed-out impurities flow over the top of the material-bank into the annular space surrounding it and pass out through the valve-opening at the bottom thereof. The wash-water is prevented from getting into the subsiding-chamber by the central pipe, which projects above the top of the material-tank for this purpose. The wash is completed by closing the valve of the annular space and permitting the first filtered water to pass out into the sewer instead of the pure-water reservoir.) As soon as the downdraft again becomes effective, the filter-bed is at once compacted to such an extent that it is necessary to draw off only a very small amount of water after washing."

The part we have placed in parenthesis appears also in the original specification, but the rest is new. The theory that was thus elaborated in the reissue is further dwelt upon in the specification of the method patent:

"My invention relates to purifying waters for potable purposes by filtering such waters through granular filters. As is well known, the principal object of filtering the water supply of towns and cities is to remove the suspended impurities, which in many instances are in a finely-divided state, and experience has proven that granular filters (that is to say, filters in which the water is caused to percolate through a filter-bed composed of loose sand or other granular material) furnish a filtering medium which is best adapted for removing the suspended impurities while permitting the water to flow at a rapid rate, as is necessary where the water supply of a town or city is being filtered. In using granular filters heretofore, however, it has been found that in most instances a granular filter-bed will not intercept and retain the suspended matter in the normal condition, and it has therefore been found necessary in almost all instances to introduce a coagulant, such as alum, into the

water before filtration, the coagulant serving to coagulate the suspended matter into masses which are larger and more susceptible of interception and retention by the granular particles composing the filter-bed; in some instances it being necessary to use such a large quantity of alum as to affect the taste of the filtered water.

"My present invention consists of an improved process of purifying water by filtration through a granular filter-bed by which the necessity of the use of alum or other coagulant is in many instances entirely avoided, and in other instances, where the impurities are in an exceptionally finely-divided state, the quantity of alum which under former processes would be necessary is very greatly reduced.

"To this end my invention consists in effecting what may be termed the 'coagulation' of the suspended impurities of the water by suction while passing through the filter-bed, the particles of suspended matter being thereby caused to come together into masses of sufficient size and of such character as to be readily intercepted and retained by the granules composing the filter-bed.

"My invention further consists in applying the suction principally at the lower portion of the filter-bed, so that it acts more strongly upon the finer particles of suspended matter which have passed through the upper portion of the filter-bed.

"My invention further includes the compacting of the filter-bed in such manner that the lower portion thereof will be of the greatest density, the density gradually decreasing toward its upper surface, as by this means, while the larger masses of impurities will be retained by the more widely separated granules at the upper portion of the bed, the lower portion of the bed will be sufficiently dense and compact to intercept the smaller particles of suspended matter, especially after they have been coagulated, as above stated.

"In the accompanying drawings I have shown apparatus designed to utilize my improved process, each apparatus in general consisting of a filter-bed of loose granular material contained in a suitable receptacle and a pure-water pipe in the bottom of said receptacle, said pipe being provided with suitable strainers to prevent the granular material from entering such pipe, and with an off-carrying pipe vertically arranged and of such length that, as the filtered water is carried off by said pipe, a partial vacuum will be created within the filter-bed; the vacuum being greatest in the lower portion of the bed and gradually diminishing toward the upper surface thereof. By this means, a continuous suction is exerted which is greatest in the lower portion of the bed, compacting it so that its density will be greatest at the bottom and will gradually diminish toward the upper surface thereof. Furthermore, the suction causes the air contained in the water to separate and concentrates it; the minute bubbles coming together, forming larger bodies of air, which are to a great extent retained within the filter-bed. As the fine air-bubbles converge they act to concentrate and coagulate the particles of suspended matter, so that finally the suspended matter is formed into larger bodies, which may easily be intercepted and retained by the filtering material. As the process of filtration continues, the air extracted from the water gradually accumulates in the bed, still further compacting it and increasing the efficiency of the filter to such an extent that, even though the bed contain large quantities of impure matter extracted from the water, the filter may nevertheless be continued in use with satisfactory results, thus making it unnecessary to wash the bed as frequently as has been necessary with other forms of filters employing granular filter-beds. * * *

"Referring to Fig. 1, which, as above stated, illustrates the condition of the granular material after filtration has commenced in accordance with my new process, it will be noted that the granular matter in the lower portion of the bed is compacted to a much greater extent than that at the upper portion thereof; the degree of compactness gradually diminishing as the surface of the bed is approached. Such compacting of the bed is effected by the creation of a partial vacuum, principally in the lower portion of the bed, by means of the downdraft through the pipe *10*. By thus compacting the bed it is much better adapted for removing the finer particles of suspended matter than would be the case were the bed of uniform density. Furthermore, the

entire body of filtering material is utilized instead of substantially the upper surface only, as in prior constructions.

"In Fig. 2 it will be noted that in the lower portion of the bed there are a number of air-spaces; the larger air-spaces being at the lower portion of the bed. Such spaces are formed in the bed by the accumulation of the air extracted from the water by suction, as hereinbefore described. After the air has performed its office of coagulating the suspended matter, it accumulates within the bed, as illustrated, and afterward is especially useful in washing the bed, as, when the current of water is reversed for the purpose of washing, the air being liberated rises through the bed and, escaping, agitates it violently, thereby freeing all the accumulated impurities, so that they may be carried off with the wash-water.

"The manner in which the impurities are coagulated by the extraction and concentration of the air contained in the water is clearly illustrated in Figs. 3, 4, 5, and 6. Fig. 3 illustrates, on a magnified scale, the condition of the air and the minute suspended impurities in the water; the circles representing the air-bubbles and the black marks the suspended impurities. It will be noted that the air-bubbles, as well as the impurities, are at first comparatively widely separated from each other. After suction has been applied to the filter-bed for a short time, the air-bubbles are drawn together, carrying with them the suspended matter, as shown in Figs. 4 and 5, until, as shown in Fig. 6, the air-bubbles finally come together, forming larger bubbles, the suspended impurities also coming together, forming clots or masses of sufficient size to be intercepted and retained by the granules of the filter-bed. In this way, with many waters, practically all the suspended impurities will be coagulated and removed without the use of a chemical coagulant, while with those waters in which coagulants must be used the quantity of the coagulant which it is necessary to use is greatly reduced.

"While in the apparatus shown in the drawings the necessary vacuum is secured by the action of the pure-water discharge, I do not limit myself to securing the vacuum in that way, as other means may be employed to secure such result. I prefer the apparatus shown, however, as by it the suction is applied uniformly through the lower portion of the bed and is substantially uniform in any given stratum."

Then follows a disclaimer in view of the prior art:

"I am aware that heretofore atmospheric pressure has been employed to force water through filtering material, such as stone or felt, but such use has been simply for the purpose of forcing the water through the filtering substance, and has not effected the extraction and concentration in the filtering material of all or a part of the air contained in the water or the coagulation or agglomeration of the impurities, as described; nor has it secured a bed of filtering material of varying density or compactness. My invention, therefore, does not contemplate the use of filtering materials such as those above referred to, but is limited to the use of a granular filtering material having an exposed filtering-surface, by which I mean a surface uncovered by felt or similar material which would prevent its use in connection with my improved process."

The basis of the decision of the District Court was that in Jewell's patent a pull of suction exists whereby a pulling force is created upon the material in the bottom of the filter, and that the use of such suction action tends to release air from the water which may be of advantage, and also tends to cause the sand grains in the vicinity of the strainer system to reseat themselves, and thereby compacts the section of the bed. In his opinion, among other things, the learned judge said:

"* * * That the process and apparatus disclosed by Jewell * * * do in practical use, by the creation of a vacuum, utilize the whole sand body

as a filtering agency, as it was never used before. Indeed that the workings of a downdraft or negative filter must in the nature of things be different from a gravity or positive head filter is self-evident, from the fact of its calling into play the powerful agency of atmospheric pressure. From this we can readily understand that such atmospheric force, whether venting itself as a weight from above or a suction from below, must cause new results in a process, the basic element of which is the pressure passage of liquid through impeding matter."

Thus the reasoning of the court was in effect that the process and theories disclosed by Jewell in his patent in practical use did, by the creation of a vacuum, utilize the whole sand body as a filtering agency as it had not been used before, and that the Jewell process does by the use of a downdraft, sealed, vertical outlet pipe create and maintain an operative vacuum, which vacuum effects a deeper utilization of the sand body for filtration than in positive head filters; that the presence of a released air incident to the use of a downdraft vacuum is helpful and not harmful by reason of the velocity imparted to the passing water by such vacuum; that the process makes the runs longer; and that both structural and maintenance costs are lessened by its use. Now it appears that, in the art of filtration, it has been the practice, when it is desired to lengthen the run of a filter or to obtain the more rapid passage of the liquid through the filtering material, to utilize atmospheric pressure upon the liquid by creating a partial vacuum within or under the filter, in this way unbalancing the atmospheric pressure which had previously been equal on both sides of the liquid. The way of accomplishing this is called "suction," and in the language of the patents in suit is described as "suction from below."

Application of this way has been accomplished in filters of many kinds. In British patent, No. 4393, of 1819, issued to Tritton for a filterer, the process was described to be one by means of an air pump or other mode of producing exhaustion or vacuum in the part or parts of the apparatus into which the filtered liquid flows, and thereby to create a difference between the atmospheric pressure acting on the liquid before and after filtration, and by means of that difference of atmospheric pressure more actively to force the unfiltered liquid through the pores, apertures, and interstices of the filter. Tritton also describes in his apparatus a part of the filter intended to receive the unfiltered liquid as communicating with the external air in such a manner that, when such part of the filter as is intended to receive the filtered liquid and the receiver are exhausted by an air pump or otherwise, the power of atmospheric pressure on the surface of the unfiltered liquid, together with the pressure used in ordinary filtration, may force it through the filter or filters by which it is to be strained.

In British patent, No. 6160, issued to James Neville (1831), and cited by the examiner in all of Jewell's applications, the invention being entitled "An improved apparatus for clarifying water and other fluids," the patent referred to a downdraft tube trapped, which, when filled with any fluid of the specific gravity of water and the cock is turned, the action of the atmosphere on the surface of the fluid contained in the cistern will be with immense force, whereby a large

quantity of the fluid would be driven through a clarifying medium in a short time. Neville used a filter bed of granular material and described his apparatus, stating that, in carrying the pipe as low as possible, he did so in order to obtain greater atmospheric pressure on the surface of the fluid contained in the vessel or reservoir, by which means a greater quantity of water would be forced though the clarifying medium. Neville disclaimed novelty as part of his invention, for the use of charcoal or sand as a clarifying medium, because that had been known and acted on for a long time before.

So, without going into greater detail, it is clear that, for many years before Jewell went into the field, there were filters with granular filter beds having exposed filtering surfaces with means for producing a partial vacuum in the filter bed and the actual application of suction from below, as well as means for reversing the flow of water through the filter.

In British patent, No. 8371, of 1899, to Edwards for "improvements in the prevention of the pollution of river waters and water courses from manufacturer's polluted waters and waste, and for cleaning and purify ordinary river waters," the filtering materials used were burnt coke reduced to small proportions, well washed river sand, and all or any or either of these materials, as best suited the special conditions under which the filter might be operated. The patent, after describing a siphon pipe and an ejector and a pipe for supplying steam, said that, in order to draw off the filtered water from each subcompartment, the inventor introduces into it one limb of a siphon, to which he attaches a steam jet ejector, by which he was enabled to acquire any required vacuum in the subcompartment and below the filter-bed. His patent also stated that such vacuum, if found to be more than required for perfect filtration, could be regulated by means of a small tap in each compartment to admit a portion of air when necessary.

The Lawrence city filtration plant, a slow sand filter, disclosed that in 1892, and prior thereto, trapped downdraft pipes were used upon slow sand filters having exposed filtering surfaces. They were apparently used in 1893 in the Lawrence city filtration plant, and in Hazen's book on the Filtration of Water Supplies, written before April, 1895, the author described the Lawrence experiment station filters.

In the Crocker mill filters, installed in 1891 at Holyoke, Mass., there were filter tanks containing filter-beds of sand with exposed filtering surfaces. In these filters, it is evident, from the testimony, a partial vacuum was created and maintained in the same sense as in the patents in suit.

In August, 1895, there was published in the Paper World the description of the Moore filter; the article referring to high and low pressure filters, and describing high-pressure filters as distinguished from the low. It was there said that, in the low-pressure class, a strong wooden case, open at the top, was employed, the water flowing as required, and after percolating through the sand was conducted away; the latter operation being generally aided by a pump, which,

establishing a partial vacuum, aided the passage of the water by suction. This reference appears to have been made as if such a use has been a common one, and certainly it fits a description of the operation of the filters of which the Crocker and one other filter theretofore in operation furnish instances. Prior art also shows means of producing a partial vacuum or suction in a filter, as illustrated by patents, such as the Neville, O. H. Jewell, No. 423,430 (1890), Sinclaire, No. 171,056 (1875) and Simmons No. 59,467 (1867).

The principle of physics which controls is that by diminishing the atmospheric pressure below (that is, by unbalancing the pressure), the atmospheric pressure above, which remains constant, always becomes effective for pushing or forcing the liquid through the filtering material. It therefore seems certain that nothing new can be claimed for "suction," or the creation of a partial vacuum within or beneath a filter-bed. Again, the compacting of the filter-bed greater at the bottom was described in the patent issued to Hyatt, No. 293,745, and, as a means employed to produce "suction," there are instances in which a trapped downdraft pipe has been used. In the present case, the patentee is confined to a downdraft pipe, trapped, inasmuch as untrapped downdraft pipes were well known in the art before the invention claimed by the patentee herein. The patents we have examined as introduced in evidence show that there were in use granular beds having exposed filtering surfaces in combination with suction, and that, when Jewell in 1895 made application for his original patent, there were means very like his for making effective the air pressure above the filter-bed. Again, the reissued patent uses the term "suction," based upon the idea that there is a pulling effect so compacting the lower portion of the filter-bed by the presence of a partial vacuum beneath it; and in the method patent the terms "suction" and "suction from below" are used with an attribution to them of a drawing effect. A witness for the filtration company, after describing compacting action under suction, states as follows:

"Third. Under these conditions the weight of the column of water descending in the suction or downdraft pipe causes the production of a larger output of properly filtered water; and the sediment separated from the water during filtration is carried farther down into the bed by the weight and velocity of the descending column of water below the bed, which force acts, as the upper portion of the bed becomes choked with sediment, to draw portions of such sediment layer downwardly into the bed, the upper portion of the bed being maintained in looser condition than it is in a positive head filter, and so allowing the free entrance of the suspended matters, and the lower portion of the bed being more compacted than the upper part, as before stated, and so tending to retain such impurities within the bed."

The "pulling of suction" theory does not stand under critical examination, however, for the testimony of scientific witnesses proves that the operative force of what is commonly called "suction" is not a pulling, but is atmospheric pressure exerted upon the liquid or other movable material to the extent of the difference of pressure upon the opposite sides of the movable material; that is to say, the operative force is unbalanced atmospheric pressure, and this atmospheric pressure acts in the direction of the area of diminished pressure, so it

becomes a pushing force, well described by one of the witnesses for the appellant in the following simple language:

"The operation of a partial vacuum in the lower part, or any other part of a filter, simply means that at a section above that part of the filter the sand is so clogged up that the water cannot pass through it as fast as it can run out of the outlet valve, and there is a tendency for the water in the filter to pull apart and leave in the sand a space not occupied by water (a partial vacuum), into which the air pressing on the surface of the water on top of the filter drives the water with increased force, measured by the degree of vacuum produced. Therefore, when a partial vacuum exists in a filter-bed, there is an added force applied on the surface of the water in the filter, tending to drive the water through the sand; under no circumstances can there be a force applied from below to pull the water through. The application of the force is from above downward, and acts, in driving the water through the sand, precisely as would an added equivalent head of water."

Another expert witness, whose scientific attainments are very clearly established, said:

"Suction does not mean that there is a pulling of the water: in fact, water has not cohesive properties to permit it to be pulled, but it must move either by being pushed or else by the force of gravity. Hence the expression 'suction applied from below,' intimating that there is a pulling force upon the bottom of the filter, refers to something that does not exist, and a force is actually applied at the top of the body of water resting upon the sand bed in the filter by virtue of the unbalancing of the atmospheric pressure."

It is proven that a partial vacuum is not made when the filter begins operation; nor is it shown that such vacuum is always greatest at the bottom of the bed. The supply from the filter-bed being regulated by a device or controller, the effluent pipe delivers less than the full capacity of the filter. From these facts it follows that, if we have a bed of clean sand, there can be no unbalancing of atmospheric pressure so long as the head presses the water through the bed at the rate set by the regulating device, and that it will be only when a clog happens that the effluent pipe will carry off water quicker than it is delivered and that a vacuum can occur. As explained by one of the witnesses for the appellant, the statement in the patents that the vacuum will be greatest at the bottom of the filter-bed is erroneous, if it is understood that such vacuum is normally and at all times or even usually found at the bottom, because such partial vacuum is a variable phenomenon conditioned upon the interval which has elapsed since the filter may have been washed, the degree of fineness of the superficial layer of sand, as compared with that below it, and the degree of clogging of the filter. The clogging would seem to be likely to be anywhere, depending upon size and kind of sand, rate of flow, presence of air, or other factors; hence the partial vacuum may occur at any time or place apparently not capable of determination by device or method of the patent.

We are uncertain whether or not, as a result of a partial vacuum at the bottom of the bed, there is a greater compactness at the bottom than above, or, as it is said, whether there is a differential compacting from below upward. Prof. John W. Langley, a distinguished physicist, said that such differential compacting did not occur in any filter where cleansing by upward washing was a feature of the action. He

said that the upward wash brings the finer grains of any heavy granular material to the top, forming thus a subsidence layer of such material of variable depth, in which the compacting is greater than in any other part of the bed. He added that any differential compacting which might occur below this top fine sand stratum would be very small in amount, and would be the result of natural forces, whereby a very small additional compacting of the sand might be near the bottom, due possibly to the friction of the water passing down through the sand as a necessary consequence of the properties of water and sand. Dr. Mason, another distinguished scientist, said that it would be impossible to make any actual measurements as to compacting of the filter-bed or near the strainer openings within the filter here involved, so as to determine the matter experimentally, and that, while he believed there would be an action toward compacting in the lower part of the bed, he could not say how far such action would extend, or what its amount would be, or whether it would be progressively smaller in a uniform degree.

We might quote at length from what scientific men testified to, but it would make our opinion needlessly long. We are agreed, however, that, when we weigh the evidence of one side against the other, it is highly probable that the lower part of the bed is but little affected by the so-called "pull of suction," and that there is but very little compacting by compression of the grains of sand, or by the sand grains moving because of the superincumbent weight of water and air. Moreover, such compacting of the lower part of the bed as occurs under the weight of water and air is not peculiar to filters operating under negative head. Neither has it been proved that the friction of the filtering water compacts the bed by rearranging the sand grains throughout the bed; and, in any event, such rearrangements would be as likely to occur in a filter under positive head as in a filter under negative head. There may be some rearrangement of sand grains near the strainer system; but, if so, it lacks the support of experiment, and would seem to be inconsiderable in extent, and as likely to be present in a filter under positive head as in a filter under negative head. Moreover, we think it is true that compacting due to overlying weight or to the downward flow of water is not the compacting contemplated by the patents. And, after a mechanical filter has been washed by a reverse current of water and air, the sand is finest and most compact at the top, because the bed must then rearrange itself in accordance with the subsiding values of the grains.

With regard to the assertion that the suspended impurities penetrate the bed more deeply under the operation of the patents, the only direct testimony on the subject is unsatisfactory. Some of the testimony relates to observations made from 8 to 15 years before the witnesses were examined; and, as no records were kept, we regard it as unsafe to rely on the unsupported recollection of witnesses after the lapse of so long a time. One other witness made a single experiment under conditions that were not very fully described and were apparently not conducted with caution. The other testimony on this point on behalf of the plaintiff was largely theoretical, and is so colored by the under-

lying assumption that "suction" is a pulling force as to be much impaired in value. Indeed, misconception of the principle of "suction" has destroyed appellee's case, for it is the real foundation thereof.

With regard to the liberation of air in the bed and its usefulness there as a "coagulant," the weight of the evidence seems to indicate that air does not of itself act as a coagulant, and that its presence in a filter-bed is almost always objectionable.

The objections to the theories of the patents have been strongly put in the able brief for the city, and we can do no better than quote them as follows:

"(1) In accordance with the pretensions of the patents, the whole invention of Jewell resides in the compacting of the granular filter-bed, greatest below and gradually diminishing towards the top, and the extraction and retention within the filter-bed of a greater or less portion of the air contained in the water. The cause of such differential compacting is alleged to be the formation of a partial vacuum in the filter-bed, greatest below and diminishing towards the top, which partial vacuum is also claimed as the cause of the liberation of air. The beneficial results of such compacting are claimed to be deeper penetration of suspended impurities into the filter-bed, and the consequent greater utilization of the entire filter-bed, and, of the liberation of air, the agglomeration or coagulation of suspended impurities, so as to dispense. entirely or to a great extent, with the use of a chemical coagulant, and the greater agitation of the filter sand in washing by a reverse current. Except the mere fact that air is liberated from water by diminution of pressure or the formation of a partial vacuum, every one of the pretensions is controverted and has, we believe, been shown to be false.

"(2) In a so-called negative head filter, as ordinarily constructed and operated, a partial vacuum does not occur at the commencement of the run and continue throughout it. It may not occur at all and, if at all, will occur only after the conditions of clogging have become such that the positive head, or pressure due to the superincumbent water, has been utilized in forcing the water through the clogged area or plane of greatest resistance, and this will be towards the end of the run. In the Harrisburg filters (said to be infringements), it occurred at all in only 25 per cent. of the runs, and then only for a short time at the end of the run.

"(3) Actual observation shows that it will occur, not necessarily or usually first or greatest at the bottom of the filter-bed, but always immediately below the plane of greatest resistance, which may be anywhere in the filter, from the strainer system up. In the Harrisburg filters it occurred indifferently at the top or bottom of the filter-bed or anywhere between, and was 'greatest in the lower portion of the filter-bed,' 115 minutes in nearly 5 months, or .06 per cent. of the entire time the filters were in operation.

"(4) The time and place of the occurrence of a partial vacuum depends upon various conditions, viz., amount and character of suspended impurities, size of sand, rate of flow, use of coagulant, temperature of water, etc., and are wholly beyond the control of the operator. Complainant's testimony is of little or no weight, because it fails to take these things into account.

"(5) In a negative head filter there is no compacting of the filter-bed, greatest below, due to the creation and maintenance of a partial vacuum greatest in the lower portion of the bed, for the reasons: (a) That such vacuum does not so appear usually, but only occasionally, and then only at the end of a run; and (b) that such vacuum, when it occurs, is incapable of producing such compacting. Neither is there such compacting due to the pulling or drawing of 'suction' upon the sand grains, for the reason that what is commonly called 'suction' has no such effect, but operates merely by rendering effective the atmospheric pressure upon the water column within and above the sand bed, and thus adding to the effective head in the same manner as an additional depth of water or any other additional pressure.

"(6) Such differential compacting of the lower part of the filter-bed as may

be due to weight of superincumbent sand and water, by way of either compression or movement of the sand grains, is negligible in amount and has no effect upon the operation of the filter. It has no relation to suction and will occur, if at all, as well in positive as in negative head filters.

"(7) Movement of sand grains due to velocity of flow is, as to the lower part of the filter, also negligible in amount. It will occur more in the top layers of the sand, where the grains are free to move, than in the lower portion of the bed, where they are held in a state of great fixity by the superincumbent weight. It has no relation to suction, and there being no difference between negative and positive head filters, based upon rate of flow, will occur in the same manner and to the same extent in the latter as in the former.

"(8) Differential compacting due to superincumbent weight or velocity of flow is not the kind of compacting called for by the specifications and claims of the patents in suit, which is compacting alleged to be due to underlying vacuum or 'suction from below.'

"(9) In all filters whose sand beds are washed by a reverse current of water (which is the universal practice in all rapid or mechanical filters), compacting is always greatest at the top of the bed, by reason of the subsidence, after washing, of the finer grains of sand at the top and the coarser grains below. This is practically an admitted fact in this case, being testified to by defendant's four expert witnesses and substantially by complainant's witnesses, Dr. Mason and Mr. Milligan, and is not denied by any of complainant's witnesses, although there was ample opportunity to do so; and no attempt was made to show that such compacting, greatest at the top, is overbalanced or offset by any compacting below.

"(10) Penetration of suspended impurities is a function of the flow of the water carrying them. The depth to which the impurities will penetrate into the filter-bed depends upon amount and character of suspended matter, size of sand, rate of flow, amount of coagulant, temperature of water, etc., and is not affected by the character of the actuating head, which, whether positive or negative, is, as we have seen, pressure—in the one case, hydrostatic, and in the other, hydrostatic and pneumatic.

"(11) Penetration of the filter-bed is not effected by partial vacuum greatest in the lower portion of the bed, because, if the latter occur there at all, it is only occasional and of brief duration, and because it is incapable of producing such penetration; nor is it effected by the 'pull of suction,' for reasons already stated.

"(12) Utilization of the entire filter-bed and deep penetration of suspended impurities is neither desirable nor safe, because of the danger of the impurities passing entirely through the filter-bed and fouling the filtered water. It is always desirable to reserve the lower part of the filter-bed as a factor of safety to meet any abnormal conditions that might develop, and thus prevent deterioration of the effluent.

"(13) The possibility of deep penetration with safety to the effluent would depend upon the compacting of the filter-bed greatest in the lower portion. This is clearly admitted in the patents and is necessarily true. But such compacting does not occur in negative head filters using a reverse current in washing, for reasons already stated.

"(14) The liberation of air in the filter-bed, far from being useful, is a nuisance, and the greatest objection to negative head filters, because it causes 'air binding' of the sand bed, and because, when the air-bubbles grow large enough, they rise by their buoyancy and 'break through' the sediment layer, causing channel-ways and irregularities of filtration which seriously affect the effluent.

"(15) It is shown that in the best modern filter practice liberated air is gotten rid of as far as possible, and complainant has attempted to show that the velocity of the moving water carries the air off through the effluent pipe. But, if it is so carried off, it cannot perform the useful functions claimed for it in the patents. Besides, if it is carried off below, it clogs the drainage pipes, reducing their capacity and causing unequal rates of filtration when large bubbles of air are suddenly carried out. 'Whichever way it goes it makes trouble, decreasing the efficiency of filtration or the length of the run, and frequently both.'

"(16) Liberated air is not useful in washing the filters. This pretension was rejected by Dr. Mason and by defendant's witnesses, and was disclaimed by complainant's counsel at the oral argument.

"(17) The pretense that air bubbles are useful in agglomerating or coagulating suspended impurities is also without foundation. It is rejected by Dr. Mason, as well as by defendant's witnesses.

"(18) The same is to be said of reduction in the amount of coagulant used.

"(19) The liberation of air depends upon the reduction of atmospheric pressure or creation of a tendency to a vacuum, and hence depends upon the conditions above stated relative to the formation of a partial vacuum, and time, place, and amount are wholly beyond the control of the operator. It being an admitted fact that liberated air, if not gotten rid of or controlled, is harmful, the patents, while claiming its utility, fail to point out how it can be controlled so as to be made useful and not harmful.

"(20) All the above-mentioned things, maintenance of a vacuum greatest in the lower part of the filter-bed, compacting of the bed greatest below, deeper penetration of suspended impurities, utilization of entire filter-bed, coagulation of impurities by air-bubbles, and other utility of liberated air, upon which the reissue was asked for and the method distinguished from that of Neville, and upon which both patents are built up, are either admitted or shown to be without existence. All that remains, as the only useful function of the Jewell apparatus or effect of the Jewell method, is the unbalancing of atmospheric pressure so that the atmospheric pressure above the filter-bed may become effective to force the water through the filter-bed when the same becomes clogged; and this is expressly disclaimed in the method patent, because Neville had already done it, and is what many others had been doing for 75 years before Jewell came into the field."

In the main, these criticisms commend themselves to us as well founded. However, it is probably enough to say that (at the best) the evidence in behalf of the company leaves us in much uncertainty whether the theories of the patents are sound. We do not feel bound to go the length of declaring the patents invalid; the reissue patent, indeed, has already expired, leaving the patentee only a claim for royalties; but we are fully prepared to say that, while the subject is so surrounded by uncertainty, the company cannot reasonably object to the application of a test that tries the Harrisburg filters by the theories of the patents. If these filters do not produce the results called for by these theories, it is certainly fair to conclude that the company has not succeeded in making out the charge of infringement. On this point, there is one piece of evidence that is not referred to by the district court, but in our opinion is of decisive weight upon the issue of infringement. We mean the prolonged experiment that was made with the Harrisburg filters, the results of which may be summarized as follows: Filter No. 2, which is typical of the 12 filters operated by the city, was prepared for the experiment under Prof. Fuertes before January 9, 1909, when a preliminary or trial run was made. It was provided with a series of gauges to show loss of head, and these indicated upon a scale the pressure at seven levels—the first in the water just above the filter bed, the next four at different levels within the bed of sand, the sixth in the gravel, and the seventh in the outflow pipe carrying the filtered water away. These gauges were read hourly from January 21st to June 11th, inclusive. Diagrams, together with the record of these readings, were given in evidence; 256 runs of the filter were covered during the winter, the spring, and the early

summer, when the water varied in temperature from 36° to 74° Fahr., and when the turbidity varied between 5 and 85 parts in a million gallons. There could hardly be better evidence of what goes on within an exposed filter-bed of sand, where means exist for producing suction, so far at least as a reduced pressure or a tendency to a vacuum is concerned. The filter was operated in the usual manner, so that nothing exceptional impaired the value of the experiment. Now, when the assertions of the patents are remembered, namely, that as the water flows down the trapped pipe a partial vacuum is created and maintained, that the vacuum is greatest below and gradually decreases towards the top, and that the filter bed is thus compacted, more densely below and gradually less towards the top, it is significant that the records of filter No. 2 do not bear these assertions out. On the contrary, they show that a partial vacuum never came into being at or near the beginning of a run; that 191 runs out of 256, or about 75 per cent. of the whole, did not show a partial vacuum at all; and that while 65 runs, or about 25 per cent., showed a partial vacuum, they did not show it until near the end of the run. Further, of these 65 runs, in which a partial vacuum appeared near the end of the run, it appeared at the bottom in only 8, while in the remaining 57 it appeared in different places, sometimes near the top of the bed, sometimes at varying levels between the bottom and the top. To state the matter from another point of view: During the whole experiment, the records show that a partial vacuum appeared first at the bottom and remained greatest in that part of the bed during only 115 minutes, or for only about .06 of 1 per cent. of the time during which the filter was in operation.

It is not easy to exaggerate the value of these carefully conducted experiments, and we think it within bounds to say that, while the Harrisburg filters are charged with infringement, it is remarkable that their customary operation during six months failed to show the characteristics that are asserted to be inseparable from the apparatus and the method of the patents. No counter experiments were made, and no serious attack was made upon these records, or upon the conclusions they seem to justify. In our opinion, therefore, the case may safely be decided by finding upon the evidence that the city has not infringed either patent.

We therefore reverse the decree, with costs, and direct the District Court to dismiss the bill.

(217 Fed. 381)

CROWN CORK & SEAL CO. OF BALTIMORE CITY v. STERLING CORK & SEAL CO.

(Circuit Court of Appeals, Sixth Circuit. October 16, 1914.)

No. 2460.

1. PATENTS (§ 17*)—ADOPTION FROM ANOTHER ART.

Having gone into another art and adopted a device therefrom, and adapted it to this art, the patentee could not thereafter get a valid patent covering broadly another adoption from the same art for similar purpose.

*For other cases see same topic & § NUMBER in Dec. & Am. Digs. 1907 to date, & Rep'r Indexes

There remained open for the later patent only the adaptation not the adoption.

[Ed. Note.—For other cases, see Patents, Cent. Dig. §§ 16, 17; Dec. Dig. § 17.*]

2. PATENTS (§ 328*)—INFRINGEMENT—BOTTLE SEALING MACHINE.

The Painter patent, No. 638,354, for a machine for automatically sealing bottles, the essential feature of which is a yielding plunger on which the bottles rest, construed, and, as limited by the prior art, *held* not infringed.

3. PATENTS (§ 157*)—CONSTRUCTION OF CLAIMS.

Only when necessary to make the claims of a patent operative, or in case of ambiguity apparent on the face of the claims, or induced by their study in connection with the specification and prior art, is a court permitted to read in an element not named therein, in order to narrow a claim so as to make valid one otherwise invalid.

[Ed. Note.—For other cases, see Patents, Cent. Dig. §§ 229–232; Dec. Dig. § 157.*]

4. PATENTS (§ 328*)—INFRINGEMENT—FEEDING APPARATUS FOR BOTTLE SEALING MACHINES.

The Painter & Hawkins patent, No. 643,973, for an automatic feeding apparatus for bottle-sealing machines, claim 2, construed, and *held* infringed.

5. PATENTS (§ 168*)—CONSTRUCTION—EFFECT OF PROCEEDINGS IN PATENT OFFICE.

The effect of the rejection of a claim by the Patent Office, and an amendment, is not necessarily a limitation, but, even if so, it may not affect the claim in the particular involved in a subsequent litigation, and the exact thing done must be examined from all sides, and especially in connection with the point later in controversy, before its effect can be interpreted.

[Ed. Note.—For other cases, see Patents, Cent. Dig. §§ 243½, 244; Dec. Dig. § 168.*

Conclusiveness and effect of decisions of Patent Office in proceedings on applications, see note to Novelty Glass Mfg. Co. v. Brookfield, 95 C. C. A. 530.]

Appeal from the District Court of the United States for the Northern District of Ohio; John M. Killits, Judge.

Suit in equity by the Crown Cork & Seal Company of Baltimore City against the Sterling Cork & Seal Company. Decree for defendant (210 Fed. 26), and complainant appeals. Reversed in part.

This was the usual infringement suit, brought by the appellant, as plaintiff, based on two patents—one granted to Painter, No. 638,354, December 5, 1899 (application filed October 28, 1898), for a machine for automatically sealing bottles, and one granted to Painter & Hawkins, February 20, 1900, No. 643,973, for an apparatus for automatically supplying to the former machine the crowns which it attached to bottles. These crowns are shallow metal caps containing a thin cork disc, and the two machines, co-operating rapidly and automatically, place these discs upon the tops of and over the bottles, and then, under very heavy pressure, form the edges down over the top of the bottle neck and so make an air-tight closure. The District Court thought that neither patent was infringed, and dismissed the bill. The two patents are so distinct that they require separate consideration.

Painter's patent is designed to meet a problem presented by the fact that bottles, supposedly alike, are not precisely of the same height, and that, if such a machine is adjusted to give a pressure of (say) 700 pounds in seal-

*For other cases see same topic & § NUMBER in Dec. & Am. Digs. 1907 to date, & Rep'r Indexes

ing a bottle of the standard height, it will fail properly to close a bottle which is a trifle short, and it will crush a bottle which is a trifle high. The accompanying sketch shows his solution. The bottle was supported by a stand, which, with each revolution of the machine, was raised a certain distance by a supporting cam. The stand consisted of three telescoping members. The upper bottle-holding member is provided with a long rod carrying, at its bottom, a piston-shaped device adapted to enter the extreme bottom telescoping member or socket. Such entry, however, is normally prevented by locking dogs, which prevent telescoping and make the two members a unit in resisting pressure. An outer case serves as a third telescoping member, within which the bottle-supporting member passes downwardly whenever the bottom piston is permitted to enter the receiving socket. Within this case, and interposed below a shoulder on the upper member and above a sliding disc or horizontal portion, which normally is held rigid by the upper end of the locking dogs, but which may descend when these dogs are unlocked at the lower end, there is interposed a spring, known as the "spring under predetermined compression" (which we shall call the "upper spring"). It will be seen from the accompanying sketch that this horizontal disc or diaphragm which is the lower end of the part marked e^5, primarily receives and carries the entire thrust of the sealing operation, and does so through this upper spring; and it is evident that if this spring is set so that it will not be further compressed until it receives a pressure of more than (say) 700 pounds, all the parts named will at first be held in rigid, relative position, but that when this pressure is exceeded, and this spring yields very slightly, the dog-retaining piston, at the lower end of the rod, will descend correspondingly, the dogs will swing inwardly, the locking engagement will disappear, and, thereupon, if nothing further was provided, the entire upper part of the device, including the supporting stand and its rod, with the upper spring and the part e^5 and the dogs, would fall until stopped by the bottom of the receiving socket, and these parts would then have to be raised until the dogs could again spring into locking position to be ready for the next operation. To accomplish this resetting automatically, Painter provides a further spring, under suitable compression, but somewhat less than in the upper spring, and the bottom of the part, e^5, is supported in the casing by this resetting spring. The result is that, as soon as by the yielding of the upper spring the dogs have been unlocked, the entire thrust is transferred to the lower spring, which gives a yielding resistance thereto, and then, as soon as the pressure is relieved, sufficiently ele-

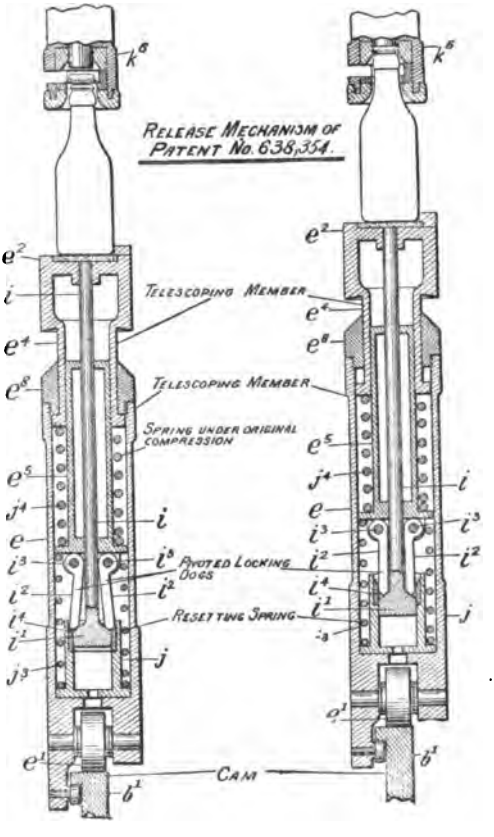

vates the upper parts and resets the device. The secondary resistance interposed by this spring to the thrust, thereby preventing the parts from being telescoped further than is necessary and avoiding a collapse, seems an important function, though it receives no mention in the specification.

Of the three claims sued upon under this patent, 4, 5, and 6, it is sufficient to quote claim 6, which is as follows:

"Claim 6.—In a pressure-limiting mechanism for bottle-sealing machines, a bottle-support, a compound cylinder, a spring between the two members thereof held under a predetermined compression, a tripping device for automatically releasing said predetermined compression, consisting of a pair of tripping-dogs pivoted to one member of said compound cylinder, and means carried by the other member of said compound cylinder for actuating the dogs, whereby said compound cylinder will become automatically shortened as a whole when the predetermined compression is reached and the pressure applied to the bottle resting thereon be automatically released, substantially as described."

Diagram Defendant's Machine.

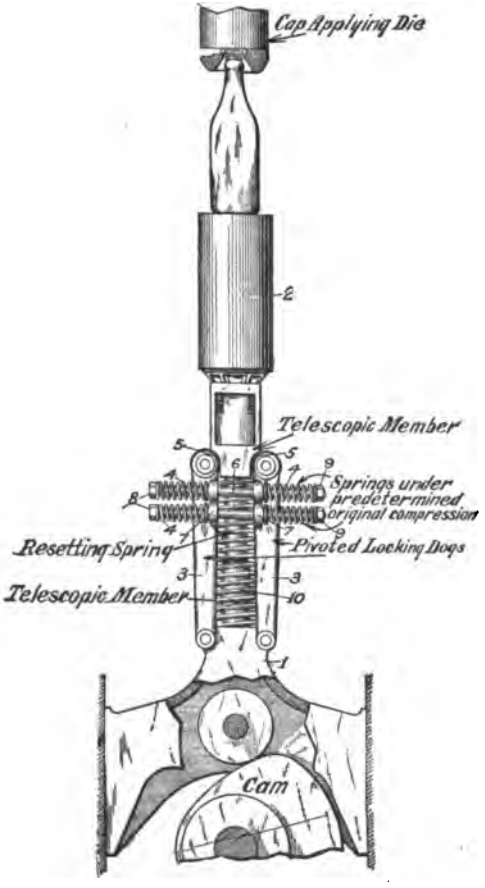

The defendant uses the device shown by the accompanying diagram. It is sufficient to say that it has all the parts called for by the claim, accomplishing all the contemplated results, but that they are in such different form and arrangement, and reach their ultimate result under such variant conditions, that the question of infringement depends upon the breadth of equivalency allowed to the claims; and this necessarily brings us to the prior art.

The Painter patent in suit was not his first attempt to solve the problem. He had found another solution, by his patent No. 609,209, of August 16, 1898. This may fairly be called similar, in general construction and operation, to the patent in suit, excepting that the piston carried by the bottom of the rod was more truly a piston and rested upon a body of oil which filled the casing below that point. When the pressure overcame the resistance of the upper spring and the piston rod moved downward slightly, it opened ports in this piston and thereupon the piston would slowly descend as the pressure continued and as the liquid passed to the other side. The supposed breadth and scope of this invention are indicated by claim 1, which is as follows:

"Claim 1.—In combination in a bottle-sealing machine, a pressure-applying head, a table or rest for the bottle, means for moving one of said parts relatively to the other to obtain the desired pressure, and means for automatically limit-

ing the application of pressure when a predetermined degree is reached, irrespective of the length of stroke of the movable part, substantially as described."

J. Q. Rice, of New York City, and R. H. Parkinson, of Chicago, Ill., for appellant.

C. P. Byrnes and G. H. Parmelee, both of Pittsburgh, Pa., for appellee.

Before WARRINGTON and DENISON, Circuit Judges, and EVANS, District Judge.

DENISON, Circuit Judge (after stating the facts as above). [1] It is familiar knowledge that, either on account of the injury to the material handled or on account of the breakage of the machine on an unexpected resistance, it has been common in many arts to provide a pitman or plunger which would exert force rigidly up to a predetermined point, and, if the resistance was not overcome, would then yield. The record informs us that this method of treatment has been so common and the plan which is devised for one situation is often so adaptable to other situations that the Patent Office maintains, in its classification list and under the class "Machine Elements," a subclass known as "Pitman—Longitudinally Yieldable." Yielding resistance by hydraulic cylinder, or by air cylinder, or by springs, were different principles invoked in the different forms. The conception which lay at the bottom of plaintiff's 1898 patent, viz., that he could go to the yielding plunger art, or to some specific art, and adopt a yielding plunger as an element of a bottle-sealing machine, was a meritorious conception. It may have entitled him to a broad monopoly upon any use of a yielding plunger in that association (as was apparently secured to him by the first claim of his 1898 patent). That question is not before us, and we do not mean to intimate any opinion; but, however that may be, having had this conception in 1898 and having received a patent, he could not have another patent in 1899 which would do more than cover the improvement which he then discovered. Having gone into the yielding plunger art, and adopted and adapted the hydraulic cylinder yielding plunger into and for a bottle-sealing machine, and having thus bridged over whatever gap there was between bottle-sealing machines and yielding plungers, and having thus incorporated the two arts together, he could not the next year adapt a mechanical trip-yielding plunger to bottle-sealing machine use and then get a valid patent covering any kind of a mechanical trip-yielding plunger when used in a bottle-sealing machine. Yet this is, in effect, his present position, and must be his position to succeed. There remained open for his 1899 patent only his adaptation, not his adoption. Judge Killits happily expressed this thought in his opinion below, when he said:

"But, when Painter patented the mechanism alleged to be infringed in this case, the art of bottle-sealing by crowns had already invaded the art of yielding pitman, of which the known forms were many, and had made an appro-

priation therefrom. Whatever may be the merits of his invention, we find nothing in his grant which shuts the door of opportunity to some other inventor to go to the yielding plunger art for an old device of this character."

[2] Defendant's structure is, speaking broadly, a reproduction of the pressure relief mechanism or yielding plunger which was shown by the now expired patent to Penfield, April 22, 1890, No. 426,315, as part of a brick machine. The parts in defendant's device are the same in number, form, shape, and arrangement as in Penfield (with the exception of the resetting spring hereafter mentioned). The Penfield structure was probably intended to prevent breaking the machine, which was of great weight and strength, when there was a large stone in the brick mold; and to adapt this machine to handling glass bottles required changes in details and very nice machining and adjustment. Whether these changes and this adaptation involved invention, and entitled the defendant to a patent, is a question not involved, except somewhat collaterally. It has no direct bearing on the inquiry whether the patent in suit is entitled to a sufficiently broad construction to include the defendant's form. It is sufficient to say that, for the reasons we have stated, Painter's second patent, which, to be valid, must be confined to the general type of resisting spring and mechanical trip which he shows, cannot cover another type of yielding plunger, the different typical character of which is demonstrated by its development from the older art, instead of from Painter's patented improvement.

[3] Another feature with reference to this patent requires attention. So far as the record informs us, the lower spring, having the double function of furnishing secondary resistance and resetting the device, was quite new in this association, and it seems to give distinct and meritorious character to Painter's device, above and beyond the credit due him for devising an efficient form of mechanical trip. Apparently, he would have been entitled to a patent securing to him the use of this double function spring in combination with any suitable form and arrangement of the other elements. In this aspect of the invention, it has been appropriated by defendant, who was apparently compelled to add Painter's resetting spring to the Penfield brick machine in order to make it satisfactory for the desired purpose. This feature of the case leaves us dissatisfied with a conclusion of noninfringement, if any reasonable construction of the claim permits the inclusion of this resetting spring as a characterizing element; but we are convinced that such construction cannot be given without doing violence to settled rules. Only when necessary to make the claims operative, or in case of ambiguity apparent on the face of the claims, or induced by their study in connection with the specification and prior art, is a court permitted to read in an element not expressly named therein, in order to narrow a claim, so as to make valid one otherwise invalid. McCarty v. Lehigh Co., 160 U. S. 110, 16 Sup. Ct. 240, 40 L. Ed. 358. This court has applied this rule, and has refused thus to narrow a claim, and confine it to what turned out to be the real invention, in many cases (see National Co. v. Gratigny, 213 Fed. 463, 467, 130 C. C. A. 109); and we have, for that purpose, limited a claim beyond its apparent

scope only in cases like Lamb Co. v. Lamb Co., 120 Fed. 267, 269, 56 C. C. A. 547, when it contained some general term of reference which was capable of being so narrowed by interpretation without importing an element distinctly foreign.

In the Painter patent in suit we can find no room for a suggestion of inoperativeness or uncertainty which would justify such interpretative treatment. All the 12 other claims of the patent, not selected for this suit, refer to the machine as a whole. One of them expressly includes this secondary or lighter spring as an element, and others contain phrases which might be construed as referring to that spring; but each of these 12 claims is, in other respects, so limited that, very likely, plaintiff was well advised in not bringing suit upon them. In distinction from the other 12, each of the 3 claims sued upon is confined to the "pressure-limiting mechanism" of the machine, and directed only to the pressure-limiting function, apparently with the distinct purpose that these claims might be broad enough to cover Painter's pressure limiting mechanism, no matter in what general association it was put. The "pressure-limiting function" is finished before this secondary spring begins to operate, and to read the secondary spring into these claims would be to say that a pressure-limiting mechanism, described as consisting of certain parts, included a part which was not named and which had no share in limiting the pressure. This is an impossible conclusion. If this suit were directed against a device which had no such secondary spring, but in which the telescoping cylinders completely collapsed when the dogs were tripped, and in which the table must, each time, be manually raised and reset, we would be compelled to find that infringement of these three claims was not avoided by the omission of this resetting spring. It is not improbable that the patentee and his solicitor regarded this secondary spring as of importance only where there was a series of sealing machines working in very rapid succession, as shown in the specification and as specified in the only claim which names the resetting spring, and that the patentee purposely drafted these three claims so that they would be broad enough to cover a slower device which should be reset by hand. To narrow them now by a limitation which the patentee refused to have would be to trifle with the patent contract. So far as the decree below finds noninfringement of the Painter patent, it must be affirmed.

[4] The other patent in suit concerns a more complicated structure. The crowns come to the sealing machine in a confused mass and are poured into a hopper. Before these can be fed to the sealing mechanism through a suitable chute, it is necessary that they be arranged so that each will be presented in exactly the same position at the receiving end of the chute, and especially that they must all be the same side up. It was common to put buttons or rivets, in a mass, in a hopper, and, in connection with agitating them, assort and select and present them, so that they would pass through a suitably shaped delivery chute. In a broad sense, this was the same operation desired for crowns for bottles; but the record is convincing that the peculiar character of these crowns so far required special treatment as to leave

abundant room for invention in adapting to their manipulation the general features of construction used for handling buttons and rivets. The constructions involved are shown by the accompanying cuts. The single claim in suit, No. 2, is given in the margin.[1] Referring to this claim and the drawing of the patent, the hopper and its inclined bottom are apparent; the external chamber of the claim is marked *E*. In the form shown, it is a short cylinder with horizontal axis, which cylinder is a part of the frame or body of the structure, and carries, centrally, a suitable box or hub for a revolving shaft. Carried by and rotating on this shaft is what the claim calls a "receptacle or cage." The further or outer side of this cage is closed by a dome-shaped cap, *k*. The side adjoining the hopper (or, more accurately, adjoining the external chamber, *E*, here considered as part of the hopper) has a central opening surrounding the rotating shaft, and through which the closures may pass from the chamber, *E*, into the rotating cage. By reason of the inclined bottom of the hopper and the comparatively separated chamber, *E*, it follows that the crowns are not presented to the selecting mechanism in a large mass, or pressed by the weight of those in the hopper, but that comparatively few continually come down and fall over against the rotating side of the cage. This is provided with lifters or wings, which pick up the crowns from the bottom of the chamber, *E*, and carry them up to a higher position, from which they slide through the opening in the side of the cage into its interior. Here the comparatively few which enter at a time are tumbled, and in the periphery of the tumbling cage are passages or openings such that, whenever a crown is presented in

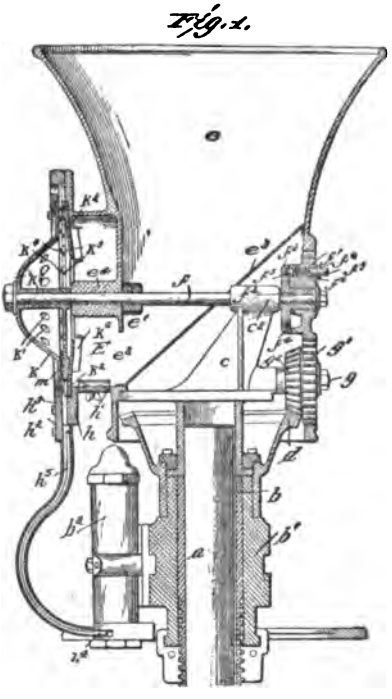

[1] "Claim 2.—In an automatic feeding apparatus for bottle-sealing machines, a hopper for the indiscriminate reception of the crowns or closures, a chamber external to said hopper, an inclined bottom to said hopper adapted to leading the closures to said external chamber, and a receptacle or cage rotating within said external chamber, having one side closed and a central opening in the side adjoining said hopper, adapted to receive the crowns or closures indiscriminately from the hopper, and containing in its periphery suitably-formed passages such that the crowns or closures can pass therethrough in one position only, whereby, by the tumbling action of said cage, the crowns or closures are changed in position therein until they present themselves in proper position to pass through said passages to a surrounding channelway, substantially as described."

proper position, it will fall out of the cage through the opening or passage and into the surrounding channel which leads to the delivery chute. The defendant's device is generally similar, but different in some respects. It clearly has the hopper, and there is an inclined hopper bottom and a rotating receptacle or cage, which, on the side away from the hopper, is more or less completely closed, which has an opening on the side toward the hopper, and which contains, away from its center and towards its periphery, passages suitable for receiving the crowns in one position only and for leading them to a surrounding channelway. Crowns in limited quantity fall from the hopper up against the interior surface of the rotating cage, when it is in the position shown. They are then impelled by inclined wings on the cage to fall through into the interior of the cage, where they are tumbled until they go out through the passageways. The distinctions which are claimed to be vital and to avoid the charge of infringement, when the claim is construed so as to save its validity, are three. It is said that the device does not contain the "external chamber" of the claim, that the rotating cage is not closed upon one side, and that the rotating cage does not have a central opening in the opposite side. As collateral to the lack of the external chamber, it would follow that there could be no inclined hopper bottom adapted to lead the crowns to the external chamber, and there could be no cage rotating within such chamber.

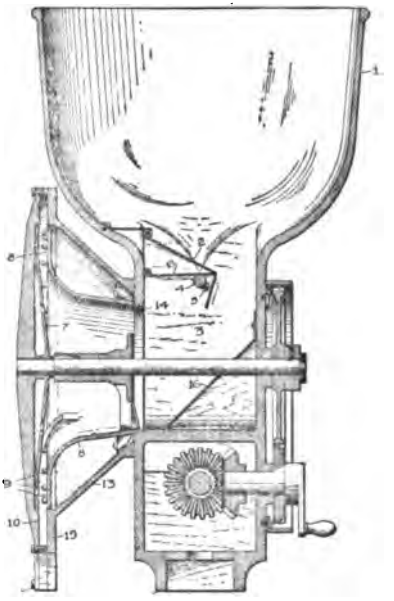

As to the first subject-matter, it is said that defendant's device is all one unitary hopper leading down to and against the interior surface of the rotating cage, and that the inclined part, marked "*2*," at the bottom of the upper wider portion, is only an agitator operated by cam *4*, preventing the crowns from arching at the hopper opening and delivering them down more slowly to the bottom of the hopper. We think it not very material to decide whether this plate *2* is or is not the "inclined hopper bottom" of the claim. The external chamber of the claim is not defined therein. So far as the terms of the claim go, the chamber may be directly below the hopper as well as at the side; and it is no distortion of the ordinary meaning of the words used to assume that plate *2* or plates *2* and *6* constitute the hopper bottom, and that everything below that point is an external chamber. We get the same result, however, if we assume that plate *16* is the inclined hopper bottom. Even then, all of chamber *3* which is above the extreme bottom and below the partition *6*, and which is at the left of an unde-

fined line connecting the external bottom point of *16* to some point in partition *6*, responds to the general idea of such external chamber. It is a chamber, and it is external to the main part of the hopper structure—that part which is permitted to operate as a hopper. If the phrase "external chamber" is treated as meaning merely a suitable passageway which will receive from the inclined hopper bottom a limited number of crowns and permit them, as they accumulate, to lie over against the face of the rotating cage, so that they will there constitute only a shallow pile (and this construction does no violence to the words used), then the defendant employs this feature.

As to the next point, it is quite fair to say that the defendant's rotating cage is closed on the side away from the hopper. There are openings, not clearly shown in the drawing, such that this side could not be called closed for all purposes; but, as used in this connection, the word merely contrasts with the open condition on the other side. "Open" and "closed" mean "open" so that the crowns will fall in, and "closed" so that they will not fall out, and with this natural and reasonable interpretation this side of the defendant's cage is closed. The fact that the closing plate does not usually rotate with the cage is not important.

The contention that the opening on the hopper side of the rotating cage is not central of the cage is not tenable. True, the exact center on this side of the cage is closed by the shaft and its box, and the opening is an annular one surrounding this box or shaft hub; but exactly the same thing is true of the patent in suit, and, in both cases, this opening is relatively central with reference to the extreme diameter of the cage.

[5] It being thus apparent that, upon a fair and natural construction of the claim language, there is infringement, the inquiry must be whether the state of the art or the Patent Office proceedings import into the language such limitations as to require the contrary result. Our study of earlier patents, as proved in this case, shows no anticipation (indeed, no complete anticipation is claimed); and we find nothing justifying any further claim limitations than were required during the progress of the application through the Patent Office; and so we come to the question, as the really vital one in the case, what the effect was of the various rejections and amendments. On this question it is as important not to exaggerate as it is not to minimize. Where there has been a rejection, followed by an amendment, it is natural to think of the net result as a limitation; but it may be or may not be. Not infrequently it is a mere expedient for overcoming the examiner's unfounded objection, or it only makes more clear to him the real meaning of the claim as it already existed, or, if a limitation, it is in some particular which is wholly without effect as to the point involved in the subsequent litigation where the proceedings are under examination; indeed, sometimes, the amendment is, in that particular, if not generally, a distinct broadening of the claim. The exact thing done must be examined from all sides, and especially in connection with the point later in controversy, before its effect can be interpreted. We therefore approach the study of the Patent Office proceedings from this point of view: Assuming that the claim lan-

guage, with reference to what is said to be the missing or the variant element, might otherwise properly be thought to read upon defendant's structure, did the applicant, before the grant of the patent, acquiesce in a construction which, as to this particular feature, is more limited? If so, the patentee is bound by that limited construction; otherwise, not.

First, as to the external chamber: Did anything occur by which the applicant agreed to a definition of this chamber as one on the side of the lower part of the hopper and with a clear and absolute line of demarcation between the two, rather than as merely a suitable passageway leading from the inclined hopper bottom and presenting at its further edge only the bottom of a sloping pile of crowns? The claims which involve this external chamber appeared in the original application as 1 and 2. One of them named this part as "a passage for supplying the crowns from the hopper to the cage" and the other named it as "an auxiliary chamber adapted to receiving the crowns from the hopper." These claims were rejected on reference to patents to Muslar, Gillette, and Bennett. Thereupon applicant canceled these claims and substituted four others, each of which contained, in some form, as an element, this external chamber, but in no one was there any restriction upon its location, size or shape. Neither did any one of the four claims carry any restriction upon the form or construction of the rotating, selecting cage, excepting that it rotated in the external chamber and was provided with exit passages. The rejection was repeated upon the same references. These claims were canceled, and two new claims were submitted. Each of these included a reference to "a chamber external to the hopper." These were again rejected. The applicant asked an explanation of the rejection, and the examiner pointed out that:

> "Bennett discloses a hopper and chamber external to the hopper, an inclined bottom to the hopper for feeding to the external chamber and a selecting cage in the external chamber, an exterior portion of the cage forming part of the front wall of the chamber."

To this statement applicant responded with an argument pointing out the distinctions between his device and Bennett's. He insisted that Bennett had no selecting cage, in applicant's use of the phrase, and had only a notched disc which picked up buttons directly from the mass in the bottom of the hopper, and pointed out that in both the references the articles did not pass into a selecting cage to be tumbled, and said:

> "In applicant's case, they pass in a mass into the interior of what is truly termed a rotating cage, and they are selected by passing through the pockets from the inside outward. This construction is the gist of applicant's invention, which enables it to successfully select and fit the crowns. * * * Thus neither Bennett nor Gillett really use a selecting cage. * * * The claims now presented have also the element of a rotating selecting cage, having one side closed and the other open."

Accompanying this argument was the claim now in suit, and it was thereupon allowed. It differed from and was more limited than the claims which had been rejected, not at all with reference to the external chamber, which was claimed in the same general language which

had been continually used, but in the provision that the rotating cage should have one side closed and should have a central opening in the opposite side, and that it should be adapted to receive crowns indiscriminately from the hopper, and that it should have in its periphery suitably formed selective openings.

This history demonstrates that no limitation upon the form or location of the element, which was sometimes called an external chamber and was sometimes called an intermediate passage, was, at any time, put upon the claim as the result of any rejection. The patent to Bennett is not included in the record. We must, therefore, take at their face value statements regarding it made by the application record. The two other patents cited, Muslar and Gillett, disclose nothing corresponding to the external chamber. However, since it was said to be contained in Bennett, and this was not denied by applicant, we must assume that it was. It follows that there is no patentable novelty in this external chamber alone, considered as a passageway which would present crowns to selecting mechanism in such a way as to prevent clogging; and the same conclusion would seem to follow as to the hopper with inclined bottom in connection with the external chamber or passageway; but it does not follow that there could be no invention in combining these two elements with a new form of a selecting cage adapted to receive and tumble and select the closures fed through the hopper and intermediate chamber.

When we trace the rotating cage through the history of the claim amendments, we find that it was at first named broadly as merely a rotary, selecting cage. Then, in the four claims, it was limited to a selecting cage rotating within the external chamber and containing exit passages. After these claims were rejected, the two next presented tendered a less limited description of the selecting cage, providing only that it should form one wall of the external chamber, but without any limitation upon its interior shape, construction, or operation. Then, when the Office pointed out that Bennett was thought to have a rotating cage responding to these two broadened claims, applicant presented the argument already quoted, insisting that the Bennett device had no rotating, selecting cage in the sense in which the claim used the term, and for greater certainty and better distinction pointing out that the rotating cage, which was to be an element of the combination in the patent being solicited, should be centrally open at one side, so that crowns could pass in a mass into its interior and be there tumbled, being kept in by the closed opposite side of the cage and being allowed exit only through suitable peripheral passages. The examiner, representing the government, acquiesced in this view, and a patent issued. Certainly there is, in this course of conduct, nothing limiting the claim to that form of central opening in one side of the cage or to that form of closing the opposite side of the cage which the drawings show. The proceeding, as a whole, shows that applicant in the end insisted that it was new to combine in one structure the hopper with the inclined bottom, the external chamber or intermediate passage leading from the inclined bottom to the selecting cage, and a rotating, selecting cage which had an interior cavity where a comparatively small number of

the articles would be tumbled, which would receive these articles through a central side opening, which was closed upon the other side and which had suitable exit openings, and shows that the Patent Office yielded to this insistence and issued the patent; and we can find nothing tending to limit the claim in any particular which will serve to distinguish the defendant's device. No one had before combined such a hopper and such a passageway with such a selecting tumbler cage. The combination successfully met the peculiar difficulties of handling this material; and even though there might have been no invention in selecting and combining these three elements, if all had been old, yet there was sufficient novelty in this cage itself, so that a patent for the combination of this cage with the other two elements necessary to make it satisfactorily do this work, although the other elements were old, was a valid patent.

It is not fully accurate to say that the selecting cage of the patent rotates "in the external chamber," and this descriptive phrase must be read with reference to the actual structure to which it refers. As the claims are worded in some of the amendments, this rotating cage forms one side of the external chamber. It is not wholly wrong to say that a rotating disc, which forms one side of the chamber, and so is one part of the chamber, rotates in the chamber. The function of the patent consisted in so relating the chamber and the cage that the crowns were passed slowly into the cage, so that it would contain only a few at a time. This was new, and we are not inclined to give the word "in" its most precise meaning; but even if we should, and should say, as defendant argues, that the cage of the patent rotates "in the external chamber" only by means of its vanes or lifters, which project into the chamber so as to contact with the crowns which lie at its extreme edge, and, therefore, that defendant's cage must be found to project into the chamber in the same way, it would not alter the result. Defendant also has vanes or wings projecting beyond the chamber surface of the cage, and so projecting and rotating in the chamber. The projection is slight, but it is sufficient to reach and affect the adjacent crowns. They are not lifted up and carried over, just as in the patent in suit, but they are pushed along, or agitated, and caused to fall over, with practically the same result.

Construed as we think the claim should be, no one of the distinctions between it and defendant's structure is material, and there should be the usual decree for injunction and accounting. In this particular, the decree below is reversed, and, for that purpose, the case is remanded, with costs.

(217 Fed. 400)

DIAMOND PATENT CO. v. S. E. CARR CO.

(Circuit Court of Appeals, Ninth Circuit. October 13, 1914.)

No. 2376.

1. PATENTS (§ 81*)—ANTICIPATION — PRIOR USE — BURDEN OF PROOF TO ESTABLISH.

The burden rests upon the defendant in an infringement suit to establish the defense of prior use and consequent want of novelty in the patent, and because of the presumption of novelty arising from the issuance of the patent every reasonable doubt should be resolved against him.

[Ed. Note.—For other cases, see Patents, Cent. Dig. § 104; Dec. Dig. § 81.*]

2. PATENTS (§ 75*)—ANTICIPATION—PRIOR USE—NATURE AND EXTENT OF USE.

Prior use, to invalidate a patent, must have been so far understood and practiced or persisted in as to have become an established fact, accessible to the public, and to have contributed definitely to the sum of knowledge.

[Ed. Note.—For other cases, see Patents, Cent. Dig. §§ 92-97; Dec. Dig. § 75.*]

3. PATENTS (§ 328*)—VALIDITY—SHOWCASE.

The Weber patent, No. 801,944, for a showcase made of glass plates, the essential feature of which is the manner of joining the plates by means of a felt cushion placed between them and to which they are cemented, thereby making an elastic joint, *held* not anticipated by a prior use, nor invalid, because of insufficient description in the claims, nor because they in part describe a function.

4. PATENTS (§ 75*)—ANTICIPATION—"PRIOR USE"—IDENTITY OF ARTICLE.

A "prior use," to negative novelty and invalidate a patent, must have been of an article which was complete and capable of producing the result accomplished by the patented article, and not merely of one which by modification could be made to perform the same function.

[Ed. Note.—For other cases, see Patents, Cent. Dig. §§ 92-97; Dec. Dig. § 75.*]

5. PATENTS (§ 167*)—CONSTRUCTION—RESORT TO SPECIFICATION.

While a claim of a patent may not be enlarged by the language used in the specification, it may be illustrated thereby, and the specification and drawings may be resorted to for the purpose of better understanding the meaning of the claim.

[Ed. Note.—For other cases, see Patents, Cent. Dig. § 243; Dec. Dig. § 167.*]

Appeal from the District Court of the United States for the Northern Division of the Eastern District of Washington; Frank H. Rudkin, Judge.

Suit in equity by the Diamond Patent Company against the S. E. Carr Company. Decree for defendant, and complainant appeals. Reversed.

The appellant, as the assignee of letters patent No. 801,944, issued to Fred Weber, of date October 17, 1905, brought a suit against the appellee for an injunction against infringement and for an accounting. The appellee defended on the ground that the patent was anticipated by the prior knowledge and use of one W. G. Whitcomb in Kansas City, Mo. The court below found upon

*For other cases see same topic & § NUMBER in Dec. & Am. Digs. 1907 to date, & Rep'r Indexes

the evidence that the defense was sustained, and thereupon dismissed the bill.

The patent is for a showcase to be used in exhibiting small commercial articles for sale. In the prior art there had been showcases made of wooden frames with glass plates fixed in grooves therein, and later showcases had been made of glass alone, the plates of which were held together by metal clips, attached at the several corners of the glass plates. These not having proved satisfactory, glue or paste was inserted along the edges of the plates, which, becoming hard, assisted in holding them in place. Other showcases were made of glass with the edges of the plates glued or pasted together, and with bolts or screws inserted through the glass plates at the corners, in lieu of metal clips. Later, showcases were made all of glass, by pasting or gluing the edges of the glass plates together without clips, bolts, or screws; but they were not satisfactory, for the reason that, as soon as the glue or paste dried, the joints became rigid, and, there being no vibration or yield therein, the plates were easily broken.

Weber conceived the idea of inserting a strip of elastic or vibrating material between the glass plates, in order to prevent breakage in moving the same, and breakage from the expansion or contraction caused by heat or cold. In his specifications he described his improvement as residing particularly in the means of fastening one glass surface to another, or to the woodwork forming a part of the case. The object of this, he said, was to do away with drilling holes through the glass, and to dispense with metallic or other fastening devices, and to provide for a certain amount of elasticity of the joint "whereby a cushion effect is produced." He continued: "If the parts were rigidly united, severe shocks received by the showcase would tend to shatter the plates or displace the parts; but in the present invention the cushioned joint aids in maintaining the union of the parts, affording, as it does, an elastic or resilient joint, which eases the strain at the actual union or contact faces of the plates, thereby also greatly softening the effects of shocks received by the case. * * * The cement is applied to the felt superficially, forming a skin, as it were, on both sides of the felt, so as not to permeate the same. By uniting with the felt it would form a hard, practically homogeneous substance, thus destroying the resiliency of the felt. The cement should be applied to the felt when quite thick, so it will not soak into the felt."

The claims are as follows:

"1. A structure comprising a plurality of glass plates, the edges of which are spaced from the adjacent plates, a felt cushion filling the space between the adjoining plates, the plates being cemented to the felt; each plate being adapted to freely vibrate in its natural plane of vibration, and prevented by the felt cushion from imparting its vibration to the adjacent plates.

"2. A structure comprising a plurality of glass plates, an unconfined edge of one plate nearly, but not quite, meeting another plate, also with unconfined adjacent edge, an elastic material filling the space thus existing between the nearest adjacent surfaces of the plates, said plates being attached to the elastic material, whereby the plates, by reason of their unconfined edges and the intervening elastic material, can each vibrate or move in any direction independently."

Scrivner & Montgomery, of San Francisco, Cal., for appellant.

Skuse & Morrill and S. H. Cutting, all of Spokane, Wash., for appellee.

Before GILBERT and ROSS, Circuit Judges, and WOLVERTON, District Judge.

GILBERT, Circuit Judge (after stating the facts as above). The evidence shows without contradiction that the Weber showcase met with immediate success, that the demand for it grew to such an extent that Weber could not personally meet it, and that for that reason

he transferred the patent to the appellant. Weber testified that he had no trouble in repairing any of his cases, no trouble in setting them up, and no trouble from breakage in shipping the same, and one of the officers of the appellant testified to a wide and extended sale of the Weber showcase, and the marked success of his corporation in making and selling and in licensing others to manufacture the same throughout the United States.

[1, 2] The appeal herein presents the single question whether the evidence introduced to prove prior use is in law sufficient to negative the novelty of the invention. Concerning the nature of the evidence required to establish the defense of prior use, it was said, in Coffin v. Ogden, 18 Wall. 120, 21 L. Ed. 821:

> "The invention or discovery, relied upon as a defense, must have been complete, and capable of producing the results sought to be accomplished, and this must be shown by the defendant. The burden of proof rests upon him, and every reasonable doubt should be resolved against him."

In Cantrell v. Wallick, 117 U. S. 689, 6 Sup. Ct. 970, 29 L. Ed. 1017, the court reaffirmed the rule that the burden of proof is upon the defendants to establish the defense of prior use and consequent want of novelty. "For," said the court, "the grant of letters patent is prima facie evidence that the patentee is the first inventor of the device described in the letters patent and of its novelty. * * * Not only is the burden of proof to make good this defense upon the party setting it up, but it has been held that 'every reasonable doubt should be resolved against him.'" And in Tilghman v. Proctor, 102 U. S. 707, 26 L. Ed. 279, it was held that the prior use must be something more than an incidental or casual one. In Gayler v. Wilder, 10 How. 477, 13 L. Ed. 504, it was held that the prior use must be so far understood and practiced or persisted in as to become an established fact, accessible to the public and contributing definitely to the sum of knowledge. Cases applying these rules are Acme Flexible Clasp Co. v. Cary Mfg. Co. (C. C.) 96 Fed. 344, Anthracite Separator Co. v. Pollock (C. C.) 175 Fed. 108, Ramsay v. Lynn (C. C.) 187 Fed. 218, and Ajax Metal Co. v. Brady Brass Co. (C. C.) 155 Fed. 409. Under the rule established by these decisions, we are required to view with caution and careful scrutiny evidence which is introduced to show a prior use that destroys the pecuniary value of a patent, which has met with commercial success and has been of value to the community.

[3] The showcases which are said to be evidence of prior use were manufactured in 1899 and 1900, in Kansas City, Mo., by W. G. Whitcomb, a cabinet maker, who made one lot of ten for the Cooper Drug Company of Joplin, Mo., and a lot of five for the Federmann Drug Company of Kansas City. Whitcomb testified that the Joplin cases had screws or bolts in the corners, and some of them had one also in the middle, and that those made for Federmann were substantially the same—that the glass plates in all those cases were fastened together with a preparation which he made himself. From his own evidence and the testimony of another witness, the "preparation" seems to have been similar to ordinary liquid glue, a product that could readily be poured from one receptacle to another. Whitcomb, who had thereto-

fore and since made ordinary showcases, testified that he did not like to make all-glass showcases, and that, if a customer wanted one, he would talk him out of it. He said: "My custom has been to advise people not to take them." The witness Jackson testified that, in a recent conversation with Whitcomb, the latter had told him that all-glass cemented showcases were no good. "He denounced the cases as being no good, on account of breakage that might occur in them, and the inaccessibility of the joints to be repaired." Whitcomb testified that the cases he made for the Cooper Drug Company and Federmann had felt joints, and that he used felt in the joints of these all-glass cemented cases "for the vibration of the case," and that he made some without the felt, simply stuck one plate of glass on the other, and found it was so solid any little jar would break it, and then he thought of the felt to give the elastic movement and make an elastic joint, and he testified that, while the joints in those cases are not hard and fixed, they appear to be solid, but, he added, "there must be some give to them or they would break."

But the evidence is not convincing that Whitcomb's idea in using the felt was to furnish an elastic cushion between the plates. It seems, rather, to indicate that his idea was to insert a porous medium between the plates, which, when it became saturated with glue, would present a more effective binding of the plates than could have been accomplished by glue or paste alone, and that the rubber strips which he employed in one or two instances must also have been used for the purpose of making a firmer joint, for it is common knowledge that such rubber soon becomes hard and loses its resiliency. He admitted that at first his glue permeated the felt, and he said:

"And then I got a felt that we had treated waterproof. I can't think what we called it. You can take any piece of cloth, and have the pieces sort of waterproofed, so as to keep your cement from soaking through."

But there is absolutely no evidence that in any of the showcases for the Cooper or the Federmann drug store was there any use of a waterproof felt. If, indeed, Whitcomb ever employed waterproof felt, it must have been at some subsequent experiment. In short, Whitcomb's all-glass showcases were not successful. He did not consider them successful, and he abandoned the idea of constructing them.

Mr. Federmann, who was called as a witness for the appellee, testified: "There is no elasticity in the joints at all; none that I know of." It is true that he further testified that whatever elasticity followed from the use of the felt in the joints between the glass existed in those showcases, and that any elasticity resulting from that method of construction existed in those cases. That was merely to state a truism. Its effect was not to show that there was elasticity in the joints, and it does not detract from the testimony of the witness that there was no elasticity in the joints. It may be conceded that, if there were any elasticity in joints in which the felt had been saturated by glue, Whitcomb secured it in the joints which he made, and which, as we have seen, were not satisfactory. To make such a joint was not to anticipate Weber's idea of using felt strips in combination with a

plastic cement on each side thereof, which was of such quality as to hold, but not to penetrate, the felt, and to leave it with all its natural elasticity as a cushion between the plates. It does not appear, therefore, that Whitcomb, in making his all-glass showcases, had in mind the idea which is at the basis of the Weber invention, an elastic medium between the plates.

It is not disputed that, when one of the officers of the appellant approached Whitcomb in 1906 with a view to giving him a license to manufacture the Weber showcases upon a royalty basis, Whitcomb, after examining the model, stated that he—

"did not think we would find it a good proposition, on account of the elasticity which we had in the joints, and he told me then and there that he had tried cemented showcases, but had found them unsatisfactory. In fact, he said they were so unsatisfactory he was going to discontinue the manufacture of them."

It thus appears that, before any litigation arose over the patent, Whitcomb specified as objectionable the very feature which in the Weber showcase has caused its success, and the absence of which in the cases made by Whitcomb undoubtedly caused their failure, for eight out of ten cases made by him for the Cooper Drug Company and two of those made for Federmann were broken, and the witness Holm, who repaired "four or five" of them, testified that they were put together with some kind of composition, which seemed to be a very hard substance after it dried, and "it made a hard, solid joint," and Jackson, who repaired two of them, testified that the joints were "solid and rigid."

The secretary of the appellant, who examined the showcases relied upon to prove prior use testified that they are—

"what I call solid joints all through, because the material used (I would call it glue) would permeate the felt and make a hard joint. Whatever material he used permeated the felt, and bolts were used as before described. Three distinct differences between the Federmann case and the Weber patent case are: The solid joints; the use of bolts, as above described; and the material used in the construction of the Federmann cases which (whatever it is) permeates the felt, making a solid jointed case, which was not the case in the patent. It was simply the process of putting these plates together with an elastic joint; that is the substance of the patent, as I understand it. The Joplin cases are the same composition as the Federmann, and my testimony with reference to the Federmann cases applies to the Joplin cases."

The evidence, as we view it, in the light of the decisions above quoted, fails to meet the heavy burden of proof imposed upon the defendant to show that Whitcomb constructed showcases which anticipated the Weber invention. It does not prove that Whitcomb conceived the idea of an elastic joint, or that, if he conceived it, he gave to the public the benefit thereof; for, if the idea was embodied in any of the showcases which he constructed, it was not a visible embodiment, or one that could be seen by a mechanic of ordinary intelligence, unless he examined it for that purpose. In Acme Flexible Clasp Co. v. Cary Mfg. Co. (C. C.) 96 Fed. 344, affirmed by the Circuit Court of Appeals, 101 Fed. 269, 41 C. C. A. 338, Judge Townsend said:

"I therefore understand the law on this subject to be that the mere secret practice of a process or the physical presence of a product or manufacture in

this country is insufficient as an anticipation, unless and until the public acquires, or has opportunity to acquire, therefrom such knowledge as would enable one skilled in the art to practice the invention. Such alleged anticipation, whether by foreign printed publication or physical presence in this country, must so embody the complete patented article, or be so substantially like it, that a specification could be based thereon."

[4] The novelty of an invention is not negatived by a prior useless process or thing, nor is anticipation made out by a device which might, with slight modification, be made to perform the same function. The invention must have been complete, and capable of producing the result. One should not be deprived of the results of a successful effort merely because some one else has come near it. Sayles v. Chicago & N. W. R. R. Co., 3 Biss. 52, Fed. Cas. No. 12,415. In the Barbed Wire Patent, 143 U. S. 275–284, 12 Sup. Ct. 443, 447 (36 L. Ed. 154), Mr. Justice Brown said:

"The very fact, which courts as well as the public have not failed to recognize, that almost every important patent, from the cotton gin of Whitney to the one under consideration, has been attacked by the testimony of witnesses who imagined that they had made similar discoveries long before the patentee had claimed to have invented his device, has tended to throw a certain amount of discredit upon all that class of evidence, and to demand that it be subjected to the closest scrutiny. Indeed, the frequency with which testimony is tortured, or fabricated outright, to build up the defense of a prior use of the thing patented, goes far to justify the popular impression that the inventor may be treated as the lawful prey of the infringer."

It is contended that all of the first claim after the word "felt," and all of the second claim after the word "material," is invalid as being functional and not patentable, that a patent can cover only the concrete physical means employed to accomplish the result, and that the claims thereof, being self-imposed, are binding on the patentee, and all that it does not claim is abandoned to the public, and that the claims cannot be enlarged or extended in any particular by reference to the specifications, descriptions, or illustrations of the patent; and it is argued that the patent in the present case covers only the all-glass joints of the showcase, and does not include the character of the adhesive substance to be used. It is true that in the claims no specific mention is made of the nature of the adhesive substance that is used, but the claims do in effect say that the plates are so cemented to the felt that each plate is adapted to freely vibrate in its natural plane of vibration, "and prevented by the felt cushion from imparting this vibration to the adjacent plates." This result could not be obtained without the use of an adhesive cement that would not penetrate the cushion and destroy its elasticity, and the specifications plainly call for the use of such a cement. The appellee's contention that a patentee can claim nothing beyond the terms of his claim, and that he must be limited to the invention covered thereby, is well founded. Lehigh R. R. Co. v. Mellon, 104 U. S. 112, 26 L. Ed. 639; Yale Lock Co. v. Greenleaf, 117 U. S. 554, 6 Sup. Ct. 846, 29 L. Ed. 952; Harder v. United States Piling Co., 160 Fed. 463, 87 C. C. A. 447.

[5] But, while the claim may not be enlarged by the language used in the specifications it may be illustrated thereby, and the specifications and drawings may be resorted to for the purpose of better understand-

ing the meaning of the claim. Howe Machine Co. v. National Needle Co., 134 U. S. 388, 10 Sup. Ct. 570, 33 L. Ed. 963. In Unhairing Co. v. American Co., 198 U. S. 399, 25 Sup. Ct. 697, 49 L. Ed. 1100, the court said:

"In making his claim the inventor is at liberty to choose his own form of expression, and while the courts may construe the same in view of the specifications and the state of the art, they may not add to or detract from the claim."

In Winans v. Denmead, 15 How. 329, 340 (14 L. Ed. 717), Mr. Justice Curtis said:

"Now, while it is undoubtedly true that the patentee may so restrict his claim as to cover less than what he invented, or may limit it to one particular form of machine, excluding all other forms, though they also embody his invention, yet such an interpretation should not be put upon his claim if it can fairly be construed otherwise, and this for two reasons: (1) Because the reasonable presumption is that, having a just right to cover and protect his whole invention, he intended to do so. * * * (2) Because specifications are to be construed liberally, in accordance with the design of the Constitution and the patent laws of the United States, to promote the progress of the useful arts, and allow inventors to retain to their own use, not anything which is matter of common right, but what they themselves have created."

In Seymour v. Osborne, 11 Wall. 516, 547 (20 L. Ed. 33), Mr. Justice Clifford said:

"Where the claim immediately follows the description of the invention, it may be construed in connection with the explanations contained in the specifications."

In 1900 Washer Co. v. Cramer, 169 Fed. 629, 633, 95 C. C. A. 157, 160, Judge Gray said:

"The combination or description of the standard washer, or of this Wearne tub, can be read, it is contended by defendants' counsel, into this first claim. This may be true, if we stick in the bark, by looking at the language of the claim, dissociated from the specifications; but no invention can be practically or fairly understood or explained, if such dissociation is absolutely adhered to. As we have already shown, the element described in the first claim, as 'means for actuating said lever,' must not be taken to be any means, such as impracticable hand power applied to the lever, but the efficient practical means described in the specifications. Reading the claim and the specifications together, the invention of the patentee was clearly such an application of mechanical power as would oscillate the tub with all the advantages afforded by the resiliency and retardation of the springs of the standard washer preserved."

In Century Electric Co. v. Westinghouse E. & Mfg. Co., 191 Fed. 350, 354, 112 C. C. A. 8, 12, Judge Sanborn, in applying the rule that the court should seek to ascertain from the terms of the patent, in the light of the circumstances, what was the intention of the contract between the government and the patentee, said:

"This intention should be deduced from the entire contract, and not from any part of it, or without any part of it, because they did not agree to it, or to any part of it, without every other part of it. The specification, which forms a part of the same application as the claims, must be read and interpreted with them, not for the purpose of limiting or contracting, or of expanding, the latter, but for the purpose of ascertaining from the entire agreement, of which each is a part, the actual intention of the parties, and that

intention, when ascertained, should prevail over the dry words and inapt expressions of the contract evidenced by the patent, its specification and claims."

In Smead Warming & Ventilating Co. v. Fuller & Warren Co. et al., 57 Fed. 626, 6 C. C. A. 481, Judge Shipman said:

"The construction to be given to his patent must correspond with the extent of his invention. The actual invention, if in conformity with the language of the claims, should control in the construction of patents. A strict construction should not be resorted to, if it becomes a limitation upon the actual invention, unless such construction is required by the claim."

We are of the opinion that, while the latter portion of the claims in the case at bar do, in a sense, describe a function, they also serve to describe the manner in which the plates are "cemented to the felt," as those words are used in the claims, and as shown by the specifications, and that by resorting to the specifications, for the light which they afford on that subject, we do not enlarge the claims, but construe them according to their intention, as authorized by the decisions above cited. No one familiar with the art, after reading the claims, and making the permissible reference to the specifications, could have any doubt as to what was the particular thing which the patentee claimed as new, and what was the relation of each part to the combination.

The decree is reversed, and the cause is remanded for further proceedings.

(217 Fed. 407)

SPORTING GOODS SALES CO. v. HASKELL GOLF BALL CO.

(Circuit Court of Appeals, First Circuit. September 17, 1914. On Petition for Rehearing, November 11, 1914.)

No. 1059.

PATENTS (§ 328*)—VALIDITY AND INFRINGEMENT—GOLF BALL.

The Work and Haskell patent, No. 622,834, for a golf ball, the core of which is composed of rubber thread wound under tension, covers a ball not merely differing in degree from the old style gutta percha ball, but one substantially different in kind, which by reason of its specific difference in construction and greater resiliency has a much longer range of flight, and the patent discloses invention and is valid; also *held* infringed.

Appeal from the District Court of the United States for the District of Massachusetts; Frederic Dodge, Judge.

Suit in equity by the Haskell Golf Ball Company against the Sporting Goods Sales Company. Decree for complainant, and defendant appeals. Affirmed.

For opinion below, see 210 Fed. 624.

Charles F. Perkins, of Boston, Mass. (Carroll L. Perkins, of Boston, Mass., on the brief), for appellant.

Frederick P. Fish, of Boston, Mass., and Charles Neave, of New York City (William G. McKnight, of Boston, Mass., on the brief), for appellee.

Before PUTNAM and BINGHAM, Circuit Judges, and BROWN, District Judge.

---

*For other cases see same topic & § NUMBER in Dec. & Am. Digs. 1907 to date, & Rep'r Indexes

BROWN, District Judge. This is an appeal from a decree of the District Court finding valid and infringed by the appellant letters patent to Work and Haskell, No. 622,834, April 11, 1899, for a ball for use especially in the game of golf.

The claims are:

"1. A golf ball, comprising a core composed wholly or in part of rubber thread wound under high tension, and a gutta percha inclosing shell for the core, of such thickness as to give it the required rigidity, substantially as described.

"2. A golf ball, comprising a central core section of relatively nonelastic material, rubber thread wound thereon under tension, and an inclosing shell of gutta percha, of such thickness as to give it the required rigidity, substantially as described."

The solid gutta percha golf ball, which was in general and practically exclusive use for about half a century before it was displaced by a composite ball of the type described in the patent in suit, was well suited to the requirements of the game of golf. It was durable, and while it was of such rigidity that it could be made to run accurately over the putting green, thus answering one of the main requirements of the game, it was also capable of a considerable length of flight by reason of its resiliency. The composite ball is also sufficiently rigid for use in putting, but differs substantially from the solid ball in having a much longer flight under the same force. As the golf player seeks to obtain by certain strokes a maximum of distance, and as the composite ball enables the player, using the same force, to get a length of drive of which the old ball is incapable, the new ball soon displaced the solid gutta percha ball. According to the evidence the quantitative gain in distance was from 20 to 25 per cent., and this was a very substantial matter in a game in which the player seeks to cover a long course in the minimum number of strokes.

The problem of improving upon the gutta percha golf ball involved not merely the production of a ball of greater resiliency, but of a ball which, like the solid gutta percha ball, should be rigid and thus adapted for accuracy in putting, and also sufficiently durable for practical use, as well as more resilient and of longer flight.

According to the evidence of the appellant, the feature of superiority by which the new ball displaced the old was merely its longer flight. There is evidence to the effect that on the putting green the player accustomed to the old ball found the new ball more difficult to control, because under the light putting stroke, as well as under the heavier driving stroke, the ball ran farther than the old. The general adoption of the new ball by the players who had been accustomed to the old ball shows, however, that the advantage of longer flight overbalanced any disadvantages from greater liveliness on the putting green.

On the putting green there is, with either ball, no difficulty in applying an amount of force adequate to make the ball run to the hole. If in putting the new ball runs farther than the old, this is compensated for by using a little less force.

While the new ball doubtless required some modification of the mode of play of those who learned the game with the old ball, this

does not alter the fact that the new ball is well adapted to the requirements of all parts of the game. The player who has learned the game since the adoption of the new ball is not embarrassed by knowledge of the prior art of putting with the gutta percha ball, and the fact that the older players have universally adopted the new ball shows that, even if the new ball exhibits in all parts of the game a greater degree of resiliency than the old, it is still an efficient substitute for the old ball on all shots where there is with either ball no practical difficulty in applying an amount of force adequate for a short carry or run. When the force to be applied for the shot is rather a question of judgment than of physical ability, it might, perhaps, be said that the difference between the two balls is merely one of degree. We think, however, that the appellant's argument, that because on every shot the new ball exhibits qualities due to its greater resiliency the difference between the two balls simply amounts to a difference in degree, and not in mode of operation, is unsound.

The new ball is a projectile which, by reason of its specific differences of construction, has a much longer range of flight. Under the maximum force of the player this projectile will go much farther than any other. This quantitative gain in flight is a positive thing. It is a new result not obtainable with the older projectile. It results from new qualities of the ball itself. To obtain 20 or 25 yards more distance than with the old ball the player need only purchase the new ball, and need not change the strength of his stroke. The new result may possibly be due merely to the fact that the new ball is more resilient than the other; but this excess of resiliency is due to the new combination. In order to gain the extra distance the player utilizes qualities which are possessed by the new ball and not by the old ball.

As the new ball has within itself, so to speak, some 20 or 25 yards of distance not possessed by the old ball with respect to the driving stroke, it is substantially different in kind from the old ball.

Within the range of distance which the player can obtain with the gutta percha ball the difference is not so striking, for one ball can, with some changes in the force applied, be made to do what the other can do.

The new ball may be substituted for the old on all points of the game, but the converse is not true, since on the drive the old ball cannot be substituted for the new to obtain the same result.

We agree with the finding of the District Court that there is a class of strokes whereby the patented golf ball may be made to behave as if it had not that elasticity which it is capable of displaying under heavier strokes, and which, when so displayed, is greater (as is not disputed) than that of any previous golf ball.

If it be said that the greater resiliency of the new ball, or of its core, is evoked under the light strokes as well as under the heavier strokes, it may also be said that upon the putting green this greater resiliency is not used for the purpose of obtaining distance which the physical force of the player could not attain with the older ball, whereas in the driving strokes the resiliency or other qualities of the ball effects a result that otherwise was not within the physical power of

the player. In certain strokes he gets distance which he could not get with the old ball; in certain strokes he gets, with less expenditure of force, distance that he could get with the old ball; and in those strokes in which the player exerts but a slight amount of physical force, whether with the old or new ball, the new ball, like the old, may be made to putt steadily and accurately.

We find no error in the conclusion of the District Court that the patentees' core and shell in combination produce a new mode of operation, and that the patent is not void as disclosing no patentable invention.

The argument that the change from the former golf ball was obvious is of little force, in view of the lapse of half a century without the production of a ball having this special combination of elements. It does not seem on its face obvious that so large a gain in flight would result from combining a gutta percha shell and a core of rubber wound under high tension. The evidence from the defendant as to the difficulties of producing a thin shell of gutta percha that would withstand forcible blows, and of producing a rubber-wound core which should be a true sphere, tends to show that after the general conception of making a golf ball more resilient it was still necessary to determine what specific construction of core and of shell was necessary, and whether a practical composite ball could be made, having such gain of flight as was of substantial importance, and which in other respects could compare favorably with a homogeneous and acceptable golf ball.

We think it not safe to judge of the patentability of the ball by supposing it to be merely the embodiment of the general conception of giving greater resiliency by the use of rubber and thus making a livelier ball. The conception was much more specific than this, and comprehended a unitary structure that should not only be more resilient, but should meet the various requirements of the specific game for which the ball was devised.

The record discloses by prior patents and other evidence that a number of attempts were made by other inventors to improve golf balls. No one of these inventors hit upon the successful means of doing so that are disclosed in the patent in suit.

Upon the other questions in the case, including those of anticipation and infringement, we need add nothing to the careful opinion of the learned judge of the District Court.

The decree of the District Court is affirmed, and the case is remanded to that court for further proceedings in accordance with this opinion; and the appellee recovers costs in this court.

On Petition for Rehearing.

PER CURIAM. This petition for rehearing is in substance merely a renewal of contentions made at final hearing, fully examined and considered unsound.

The petitioner states:

"It would seem indisputable that the limitation of the claims called for specific thickness that must result in such degree of rigidity of the shell itself

that the ball is rendered substantially no more resilient than a solid ball on the usual strokes of the putting green."

We find in the patent no basis for such limitation of the claims, nor for the contention that the gutta percha shell must be of such thickness and so unyielding as to prevent a light stroke from evoking any of the elasticity of the rubber core; nor does the file wrapper disclose any sufficient reason for so limiting the claims.

We regard it as entirely immaterial that even on light strokes the new ball may exhibit somewhat greater resiliency than the old gutta percha ball.

By reason of the great resistance to deformation of shape, due both to the core of rubber thread wound under high tension and to the gutta percha shell, the patented ball remains rigid under moderate blows from a club, or from contact with the ground; and because it is then not deformed, or but very slightly deformed, it does not exhibit that quality of high resiliency which is evoked by a more powerful blow. Under a powerful blow the rigidity of both shell and core is overcome, the ball is greatly deformed in shape, and then exhibits that extraordinary degree of resiliency to which the patentees ascribe the long-driving qualities of the ball.

The defendant's contention that nonresiliency must be due to the thickness of the shell and resiliency to the core involves a fallacious division of a unitary structure, not justified by the specification nor by a fair construction of the description in the file wrapper, but contradicted by the specification, which very clearly states that both core and shell co-operate in preserving the rigidity of the ball. The ball has high rigidity in the sense of resistance to deformation, and is yet capable of very great deformation of shape under violent impact, as is indicated by the fact that after such impact the blackened face of a club exhibits a circle three-quarters of the diameter of the ball.

The patentees make no comparison between the action of the patented ball and of the gutta percha ball, except possibly such as may be implied in the statement, "Our golf ball has exceptionally high-driving qualities." The comparison is between the actions of the patented ball under impacts of different force.

The District Court correctly said:

"The shell of the patent is to be comparatively unyielding as regards the elastic core it incloses."

As the District Court found, and as we find, the defendant's shell meets this as well as the rest of the patentees' description of the shell.

The defense of noninfringement rests upon what we regard as an undue limitation of the claims. Upon what we regard as proper construction of the claims, we find them valid and infringed.

Petition for a rehearing denied.

(217 Fed. 41)

MANHATTAN CANNING CO. v. WILSON.

(Circuit Court of Appeals, Ninth Circuit. October 6, 1914.)

No. 2377.

1. SEAMEN (§§ 11, 21*)—INJURY IN SERVICE—SUIT FOR CURE AND WAGES.

It is not a defense, to a suit by a seaman to recover for the cost of medical attendance and care while disabled by an injury and wages during such time, that he had been guilty of a violation of the shipping articles, which would have warranted his discharge, where the master, although having knowledge of the fact, did not discharge him.

[Ed. Note.—For other cases, see Seamen, Cent. Dig. §§ 39-44, 92-110, 187; Dec. Dig. §§ 11, 21.*

Rights and liabilities of seamen as to medical treatment, see note to The Cuzco, 83 C. C. A. 186.]

2. SEAMEN (§ 18*)—WAGES—EXTRA WAGES FOR IMPROPER DISCHARGE—CONSTRUCTION OF STATUTE.

Rev. St. § 4527 (U. S. Comp. St. 1901, p. 3077), which provides that a seaman improperly discharged before commencement of the voyage, or before he has earned a month's wages, shall be entitled to one month's wages in addition to those earned, is not applicable to a case where a seaman was taken from the vessel to a hospital, because disabled, but was not discharged.

[Ed. Note.—For other cases, see Seamen, Cent. Dig. §§ 76-82; Dec. Dig. § 18.*]

3. SEAMEN (§ 6*)—"COMMENCEMENT OF VOYAGE."

When a vessel with all her cargo aboard left her dock to be towed to a buoy in the bay for a temporary mooring, her voyage commenced.

[Ed. Note.—For other cases, see Seamen, Cent. Dig. §§ 8-18; Dec. Dig. § 6.*]

Appeal from the District Court of the United States for the Northern Division of the Western District of Washington; Jeremiah Neterer, Judge.

Suit in admiralty by J. W. Wilson against the Manhattan Canning Company. Decree for libelant, and respondent appeals. Affirmed.

For opinion below, see 210 Fed. 898.

Charles W. Dorr, Hiram E. Hadley, Clyde M. Hadley, and Frederick W. Dorr, all of Seattle, Wash., for appellant.

James Kiefer, of Seattle, Wash., for appellee.

Before GILBERT and ROSS, Circuit Judges, and WOLVERTON, District Judge.

GILBERT, Circuit Judge. The appellant employed the appellee in the capacity of cook on the brig Harriet G., at $80 a month, for a voyage from Seattle, Wash., to Port Heiden, Alaska, and return, not exceeding six months. The appellee signed shipping articles before a shipping commissioner on April 21, 1913. On April 23, 1913, the brig, having received all her cargo, left her dock in the port of Seattle, and was towed by a tug to a buoy in the bay. Immediately after she left the dock, the appellee fell from the companion way leading from the poop deck to the main deck, and sustained serious injuries.

*For other cases see same topic & § NUMBER in Dec. & Am. Digs. 1907 to date, & Rep'r Indexes

At his request he was taken to a hospital and remained there until May 5, 1913. The decree of the court below awarded the appellee $30.60 for hospital services, $50 for medical attendance, and $440 for his wages from April 21, 1913, to the end of the voyage.

[1] The appellee on the day before the accident had brought aboard five gallons of whisky, and the appellant contends that thereby he violated the provision of the shipping articles that no grog was allowed, "and none to be brought on board by the crew," and that he was drunk at the time of the accident, and the appellant cites cases to the proposition that a seaman may be discharged for drunkenness in the home port before the voyage has begun. But the evidence shows that the master overlooked the appellee's breach of the shipping articles in bringing the liquor aboard, and promptly confiscated the whisky, and that the appellee was not discharged, although another cook was employed to take his place before the vessel left the harbor. Nor are we convinced that the court below and the commissioner erred in concluding upon the evidence that the appellee was not drunk, or appreciably under the influence of liquor, at the time of the accident.

[2] It is contended that the appellee's employment ceased before the commencement of the voyage, and that he was not entitled to wages for the voyage, or for wages for more than one month, and that the question of his wages is controlled by section 4527 of the Revised Statutes (U. S. Comp. St. 1901, p. 3077). That section provides:

"Any seaman who has signed an agreement and is afterward discharged before the commencement of the voyage, or before one month's wages are earned, without fault on his part justifying such discharge, and without his consent, shall be entitled to receive from the master or owner, in addition to any wages he may have earned, a sum equal in amount to one month's wages as compensation, and may, on adducing evidence satisfactory to the court hearing the case, of having been improperly discharged, recover such compensation as if it were wages duly earned."

Conceding that this statute, which was repealed as to vessels engaged in the coastwise trade by Act June 9, 1874, c. 260, 18 Stat. 64 (U. S. Comp. St. 1901, p. 3064), was as to seamen shipped before a shipping commissioner on such vessels revived by the amendment of August 19, 1890 (26 Stat. 320, c. 801) and the amendment of February 18, 1895 (28 Stat. 667, c. 97 [U. S. Comp. St. 1901, p. 3065]), it is not, in our opinion, applicable to the present case for the reason that the appellee was not discharged, and so far as the record shows he was guilty of no fault justifying discharge.

[3] Moreover, the accident occurred after the commencement of the voyage. The voyage commenced when the vessel, with her cargo aboard, left the dock on her way to the buoy. Carver's Carriage by Sea (5th Ed.) § 148; Bowen v. Hope Ins. Co., 20 Pick. (37 Mass.) 275, 32 Am. Dec. 213; Cockrane v. Fisher, 1 C. M. & R. 809; Sun. Mut. Ins. Co. v. Mississippi Valley Transp. Co. (C. C.) 17 Fed. 919. In Barker v. McAndrew, 18 C. B. & S. 759–772, Willes, J., said:

"The commencement of the voyage is the commencement to do that for which the shipowner is to be paid freight."

We do not say that an actual formal discharge would be necessary in order to entitle an owner to discharge his obligation to a seaman by paying him a month's wages, as provided for in section 4527. The conduct of the master or owner, or the existing circumstances, might be such as in law to discharge a seaman from his contract. But that is not the present case, and it is not alleged in the answer that the appellee was discharged. Through no gross negligence of his own, the appellee was injured while engaged in the performance of his duties, and after the voyage had commenced. The case comes within the rule that a vessel and her owners are liable in case a seaman falls sick or is wounded in the service of the ship, to the extent of his maintenance and cure, and to his wages at least as long as the voyage is continued. The Osceola, 189 U. S. 158, 23 Sup. Ct. 483, 47 L. Ed. 760; The New York, 204 Fed. 764, 123 C. C. A. 214; The Santa Clara (D. C.) 206 Fed. 179; The Nyack, 199 Fed. 383, 118 C. C. A. 67.

The appellee invokes the power of this court on the appeal to add to the decree a provision for the payment of his maintenance during the time of his disability. But we find nothing in the record to justify such an award. There is no proof that the appellee expended any sum or incurred a debt for maintenance, or that the hospital charges did not cover all costs of maintenance.

The decree is affirmed.

(220 Fed. 297)

JACKSON CO. et al. v. GARDINER INV. CO.

(Circuit Court of Appeals, First Circuit. January 30, 1915.)

No. 1067.

On petition for rehearing. Denied.

For former opinion, modifying decree for complainants, see 217 Fed. 350, 133 C. C. A. 266.

BINGHAM, Circuit Judge. The appellees, in their petition for rehearing, reiterate the contention, urged by them at the argument, that Mason v. Pewabic Co., 133 U. S. 50, 10 Sup. Ct. 224, 33 L. Ed. 524, is "substantially on all fours with the present case." That we have been unable so to regard the decision referred to we think sufficiently obvious from our opinion handed down November 19, 1914, in which specific comment upon it was deemed unnecessary. In that case it appeared that the majority shareholders in the Pewabic Mining Company undertook to liquidate the company and sell its assets to themselves for shares of stock of the par value of $50,000 in a corporation which they were to organize, and, although provision was made whereby a stockholder, who declined to take stock in the new

company, could receive his pro rata share in money, it was found by the master that the fair cash value of the assets of the company was $498,412.24, and not $50,000, for which the majority had decided to sell them. The majority, therefore, were undertaking to sell the assets of the company to themselves, and at a price so grossly inadequate as to amount to fraud in fact. In this case, on the other hand, the majority were not undertaking to sell to themselves, but to the Nashua Company, in which they had no interest. The price was not grossly inadequate; and it is expressly found that in doing what they did the majority acted without fraud and in good faith. As the facts in the Pewabic Case differ so materially from those here under consideration, it evidently is not and could not be controlling here; and we think further comment upon it unnecessary.

The position is also taken that the decision handed down November 19, 1914, overrules the one rendered when the case was previously before the court (200 Fed. 113, 118 C. C. A. 287) on exceptions to an order of the District Court entering an ad interim injunction, and contravenes the rule that questions once decided will not be re-examined on a subsequent transfer of the same case. This contention is based on a false assumption, for, as pointed out in our decision of November 19, 1914, the facts alleged in the bill, and upon which the first decision was based, were not the same as those found by the masters (217 Fed. 351, 133 C. C. A. 267). According to the allegations of the bill, the value of the assets of the Jackson Company, as represented by a share of stock, was $3,277.51, and the owner of a share, under the terms of the sale, was required to take 1½ shares of Nashua Company stock in payment for his share, or the sum of $975 in cash, which would be less than one-third of the alleged value of what he surrendered. As a dissenting stockholder, according to the alleged facts, would be required to take either a grossly inadequate sum for his interest in the company or to take stock in the Nashua Company, it was very properly held that the effect of the transaction was to compel the minority shareholders to take stock, a thing which was beyond the power of the majority to require them to do.

The further contention is made that the majority never determined that the value of a shareholder's interest in the Jackson Company represented by a share of stock was $975, but that they determined it to be of the value of $3,277.51. The case discloses that the valuation of $3,277.51 was obtained from a report of a stockholders' committee. and was based on an appraisal of the Jackson Company's real estate and tangible property, as made by the official agents of certain mutual insurance companies, and the quick assets of the company taken at their face value. It is well known that mutual insurance companies, in determining the value of mill properties for purposes of insurance, do so upon the replacement theory, and it is evident that the valuation of $3,277.51 was arrived at in this way. This is also shown from the fact that the masters found that the value of a share of Jackson Company stock, ascertained upon the replacement theory, was, in May, 1911, $2,721.27, and in May, 1913, $3,228.13.

That the majority shareholders considered the fair cash value of the assets of the Jackson Company, as represented by a share of its stock, to be $975, and that that was the basis upon which they agreed to make the sale, is pointed out in our opinion (217 Fed. 352, 133 C. C. A. 268), and needs no further consideration.

Entertaining these views, the members of the court who concurred in the opinion of November 19, 1914, do not deem it necessary to reopen the case for further argument.

The petition for rehearing is denied.

(217 Fed. 1)

AMERICAN WOOLEN CO. v. STEWART.

(Circuit Court of Appeals, First Circuit. October 16, 1914.)

No. 1060.

1. MASTER AND SERVANT (§ 286*)—INJURIES TO SERVANT—DANGEROUS MACHINE—NEGLIGENCE—QUESTION FOR JURY.

In an action for injuries to an inexperienced servant in defendant's woolen mill, by having his hand drawn between the carding and hickey rolls of a finishing machine on which he was employed, while he was attempting to remove waste from the hickey roll, as he had seen others do, evidence *held* to require submission to the jury of the question of defendant's negligence in failing to warn plaintiff of the danger.

[Ed. Note.—For other cases, see Master and Servant, Cent. Dig. §§ 1001, 1006, 1008, 1010–1015, 1017–1033, 1036–1042, 1044, 1046–1050; Dec. Dig. § 286.*]

2. NEGLIGENCE (§ 97*)—INJURIES TO SERVANT—INSTRUCTIONS—COMPARATIVE NEGLIGENCE.

In an action for injuries to a servant by getting his hand caught between the rolls of a wool-finishing machine, the court charged that if defendant was careless in giving plaintiff proper instructions, and plaintiff was heedless, his heedlessness, co-operating with that of the defendant, would not prevent recovery because the injury would not be the sole result of the boy's fault, the fundamental fault being that of defendant in not giving him proper instructions. *Held* erroneous, as submitting the doctrine of comparative negligence, which is not a part of the law of New Hampshire, where the accident occurred.

[Ed. Note.—For other cases, see Negligence, Cent. Dig. §§ 96, 162; Dec. Dig. § 97.*]

In Error to the District Court of the United States for the District of New Hampshire; Edgar Aldrich, Judge.

Action by Andrew G. Stewart, by his next friend, against the American Woolen Company. Judgment for plaintiff, and defendant brings error. Reversed and remanded.

Robert L. Manning, of Manchester, N. H. (Jones, Warren, Wilson & Manning, of Manchester, N. H., on the brief), for plaintiff in error.

Alexander Murchie, of Concord, N. H. (D. J. Harrigan, of Hillsboro, N. H., on the brief), for defendant in error.

Before PUTNAM, DODGE, and BINGHAM, Circuit Judges.

---

*For other cases see same topic & § NUMBER in Dec. & Am. Digs. 1907 to date, & Rep'r Indexes

BINGHAM, Circuit Judge. The plaintiff, Andrew G. Stewart, a minor, brings this action by his father, and next friend, against the American Woolen Company to recover damages for injuries received on the 10th of June, 1913, while in the employment of that company, by reason of his hand being drawn between the carding and the hickey rolls of a finishing machine; it being one of four machines constituting a set of cards upon which he was employed.

The declaration contained two counts. The case proceeded to trial upon the second count, the first having been waived. The second count was framed under the employers' liability statute of New Hampshire (chapter 163, Laws of 1911), and the negligence complained of was, among other things, the failure of the defendant to warn and instruct the plaintiff as to the dangers of his employment and the manner of doing his work. The jury returned a verdict for the plaintiff.

The case is now here on the defendant's bill of exceptions, and the errors assigned are to the refusal of the court to direct a verdict for the defendant at the close of all the evidence, and to the court's failure to properly instruct the jury upon the question of contributory negligence.

At the time the accident occurred, the New Hampshire statute under which this action was brought provided that, in an action for personal injuries sustained by an employé, while engaged in manual labor in an employment of the character here in question, it should not be a defense that the injury was caused by the negligence of a fellow employé, or that the employé assumed the risk of injury, and that the burden of proving contributory negligence should be upon the defendant. Boody v. Co., 77 N. H. 208, 90 Atl. 859.

[1] We are of the opinion that the first assignment of error cannot be sustained. We have examined the evidence as to the defendant's negligence and the plaintiff's freedom from fault, and, without going into a detailed discussion of it, it seems to us that—inasmuch as it appears the plaintiff was a boy 16 years of age, that he had had little or no experience about machinery, that he was acting in the performance of his duty in attempting to remove the waste from the hickey roll, that he had seen others, including the servant who was delegated to instruct him as to the method of doing his work, remove waste with their hands from the cards while they were in motion, that he had not been warned of the danger of doing the work in this way, or instructed as to any other method or way of doing it, that the machinery was complicated, that he had worked about the machines but a brief period, and that he was injured on his first attempt to remove the waste from the hickey roll—the trial court was fully justified in submitting the case to the jury. Lapelle v. Paper Co., 71 N. H. 346, 51 Atl. 1068; Disalets v. Co., 74 N. H. 440, 69 Atl. 263; Goodale v. York, 74 N. H. 454, 69 Atl. 525; Driscoll v. Rolfe, 75 N. H. 586, 71 Atl. 379; Lane v. Manchester Mills, 75 N. H. 102, 71 Atl. 629.

[2] The second error complained of arises on the defendant's exception to the charge of the court to the jury, wherein he said:

"If you should find that the defendant was careless in not discharging its duty in respect to giving sufficient instructions to the boy, and you should find the boy was heedless, that they were heedless because at fault in not sufficiently impressing upon the boy's mind the dangers, his heedlessness, co-

operating under such circumstances as that, would not prevent his recovering, because the injury would not be the sole result of the fault of the boy. There would be the fundamental fault of the defendant in not giving the boy proper instructions."

This instruction is manifestly erroneous. It is a statement of the doctrine of comparative negligence which is not a part of the common law of New Hampshire, nor in any way recognized by the provisions of the act under which this action is brought. It allowed the jury to find a verdict for the plaintiff, notwithstanding they might find that he was negligent and that his negligence contributed to his injury.

The judgment of the District Court is reversed, the verdict is set aside, and the case is remanded to that court for further proceedings not inconsistent with this opinion; and the plaintiff in error recover its costs in this court.

(217 Fed. 3)

In re JULIUS BROS.

(Circuit Court of Appeals, Second Circuit. August 10, 1914.)

No. 203.

1. BANKRUPTCY (§ 100*)—ADJUDICATION IN INVOLUNTARY PROCEEDINGS—EFFECT AS ESTOPPEL.

If a petition in involuntary bankruptcy charges different acts of bankruptcy, and the adjudication does not show upon which one it proceeded, it does not render either charge res judicata in the further proceedings.

[Ed. Note.—For other cases, see Bankruptcy, Cent. Dig. §§ 60, 131, 141-144; Dec. Dig. § 100.*]

2. BANKRUPTCY (§ 407*)—GROUNDS FOR REFUSING DISCHARGE—FRAUDULENT TRANSFER OF PROPERTY.

The provision of Bankr. Act 1898 (Act July 1, 1898, c. 541) § 14b (4), 30 Stat. 550 (U. S. Comp. St. 1901, p. 3427), as amended by Act Feb. 5, 1903, c. 487, § 4, 32 Stat. 797 (U. S. Comp. St. Supp. 1911, p. 1496), making a transfer of property by a debtor, within four months prior to bankruptcy, with intent to hinder, delay, or defraud his creditors, ground for denying a discharge, includes two classes of transfers: First, those made with actual fraudulent intent; and, second, those where from the terms of the agreement, or the nature of the transaction itself, the fraudulent intent is presumed as an inference of law. But a bona fide transfer of property for a valuable consideration is not within the provision, although it may in fact hinder and delay creditors, or result in a preference; the statute recognizing the distinction between an intent to defraud and an intent to prefer, which latter is not made ground for denial of a discharge.

[Ed. Note.—For other cases, see Bankruptcy, Cent. Dig. §§ 729-731, 737, 738, 740-751, 758, 760, 761; Dec. Dig. § 407.*]

3. BANKRUPTCY (§ 407*)—RIGHT TO DISCHARGE—FRAUDULENT TRANSFER OF PROPERTY.

The sale and transfer by the members of an insolvent mercantile partnership, within four months prior to bankruptcy proceedings against them, of all their property for its full value to a corporation organized by friends, who were not creditors, for the purpose of making the purchase, and the placing of the proceeds in the hands of an attorney to be used in discharging their indebtedness as far as possible, without preference, by payment of his pro rata share to each creditor who would accept the same in composition of his claim, was not a transfer with intent

*For other cases see same topic & § NUMBER in Dec. & Am. Digs. 1907 to date, & Rep'r Indexes

to hinder, delay, or defraud creditors, which barred the right of the partners to a discharge under Bankr. Act 1898 (Act July 1, 1898, c. 541) § 14b (4), 30 Stat. 550 (U. S. Comp. St. 1901, p. 3427), as amended by Act Feb. 5, 1903, c. 487, § 4, 32 Stat. 797 (U. S. Comp. St. Supp. 1911, p. 1496).

[Ed. Note.—For other cases, see Bankruptcy, Cent. Dig. §§ 729–731, 737, 738, 740–751, 758, 760, 761; Dec. Dig. § 407.*]

Appeal from the District Court of the United States for the Southern District of New York.

This is an appeal from an order and decree entered in the United States District Court for the Southern District of New York denying the petition of George Julius and Simon Julius trading as Julius Bros., bankrupts, for their discharge. This decree was entered on October 24, 1913.

The bankrupts are brothers and were engaged as copartners in the manufacturing of waists in the borough of Manhattan, in the city of New York, under the firm name of Julius Bros. On June 7, 1910, the entire stock in trade, machinery, fixtures, and accounts receivable were transferred by bill of sale to a corporation organized for the purpose by friends of the bankrupts, none of whom were creditors. The purchase price, $1,550, was put into the hands of their counsel to distribute among such of the creditors as were willing to accept 25 per cent., and was paid over to all the creditors with the exception of the two protesting creditors. The nonassenting creditors thereafter obtained judgments against the bankrupts. On July 23, 1910, Peter Pressman obtained judgment for $599.45. On July 27, 1910, Frank & Sons obtained judgment for $405.71. Executions were returned unsatisfied. These creditors, in conjunction with one Herzog, on a claim for costs assigned to him, thereupon filed a petition in involuntary bankruptcy, on September 15, 1910, and adjudication was ordered on September 30, 1910. Schedules were filed January 13, 1911, setting out as sole liabilities the above judgments and no assets.

For opinion below, see 209 Fed. 371.

Malcolm Sundheimer, of New York City, for appellants.

Harry L. Herzog, of New York City, for appellees.

Before LACOMBE, COXE, and ROGERS, Circuit Judges.

ROGERS, Circuit Judge (after stating the facts as above). The discharge of the bankrupts has been refused, and we are asked to determine on this appeal whether error was committed in denying them their discharge. The granting of a discharge is not a matter which is optional or discretionary with the court. The statute provides that the judge shall hear the application for a discharge and shall discharge the applicant unless statutory cause for refusing the discharge is shown. It is made the duty of the court to refuse to discharge a bankrupt if it appears that he has "at any time subsequent to the first day of the four months immediately preceding the filing of the petition, transferred, removed, destroyed or concealed or permitted to be removed, destroyed or concealed, any of his property with intent to hinder, delay, or defraud his creditors." Bankr. Act 1898, § 14b, as amended by Act Cong. Feb. 5, 1903, 32 Stat. 797.

It is necessary, therefore, to consider whether the bankrupts did within four months of the filing of the petition in bankruptcy make a

*For other cases see same topic & § NUMBER in Dec. & Am. Digs. 1907 to date, & Rep'r Indexes

transfer of their property with intent to hinder, delay, or defraud their creditors within the meaning of the Bankruptcy Act. The special master thought they had, and his finding was confirmed by the District Judge. We think both the special master and the District Judge reached the conclusion with no little reluctance. The special master stated that he was "satisfied that these bankrupts made an honest failure and an honest attempt to settle, but the method of settlement adopted was at fault." And the District Judge in his opinion said, after stating that the transfer was "fraudulent" within the meaning of the act and that notwithstanding the fact that the bankrupts may have thought they had the right to make it "because fraud is not synonymous with personal sin, and a man may honestly justify quite illegal purposes. Nor is it one's inward justification of his conduct which counts, for this is not a court of conscience; it is wholly a question of whether the things proposed did in fact result in depriving the creditors of their rights."

In all that was done we have no reason to doubt the entire good faith of these bankrupts, and of their counsel, throughout the whole of this unfortunate difficulty. The bankrupts apparently made an honest failure, and acting under the advice of a committee of their creditors and a lawyer, who represented them and the majority of the creditors jointly they attempted, in order to save expense, to adjust their trouble through a common-law composition agreement. But unhappily a few of the creditors declined to agree to it. In all such cases a single creditor is in a position where he can make a good deal of trouble, if so disposed.

The other creditors, when they knew all the circumstances connected with the failure, were willing to accept 25 cents on the dollar and to settle their claims on that basis. The record shows that while the matter was pending Mr. Herzog, an attorney acting for certain creditors, went to see the attorney who was acting for the bankrupts, and stated to him that he would not consent to the proposed terms "unless he was going to get something in addition for his client"—that "whenever he got into a bankruptcy matter his client ought to be treated upon a separate basis or a better basis than anybody else, because when they represented creditors they were treated that way." He was informed that what he sought he could not obtain, that no one creditor would be given more than another, and that the settlement "was going through in the right way or it was not going through at all." To this Herzog is said to have replied that "he had to make a showing, and that the only showing he could make was to show dollars and cents, and by getting his clients a better settlement than anybody else." He was informed that there was money deposited for him "which would be available to him the same as anybody else." To this he replied that he would not take it, "but would fight the thing through the court, and made various threats." The record also discloses that one of the objecting creditors stated to the attorney for the creditors' committee that he would sign the composition agreement of 25 cents "cash extra on the side." The proposal was indignantly rejected.

Instead of coming into the bankruptcy court and offering a composi-

tion in the statutory manner, thereby avoiding any attempt of one creditor to secure an advantage over another, a plan had been conceived of forming a corporation to purchase the assets of this insolvent partnership for $1,500.

The creditors' committee had reported that "everything was worth about $1,250," but "they wanted to make it a round sum, and they thought, if we could pay 25 cents on the dollar cash, all the creditors would come in, and that is how the sum of 25 cents cash was arrived at. That was the way that was arrived at, and that amounted to $1,-550." The consideration, therefore, amounted to a few hundred dollars in excess of what the creditors' committee thought the assets were worth at the time. Four individuals, none of them creditors, but each a friend of the bankrupts, furnished this money and received in return stock representing that amount in the new corporation.

[1] The petition upon which Julius Bros. were adjudged bankrupts alleged two grounds for proceeding against them in involuntary bankruptcy:

(1) That these persons had transferred their property with intent to hinder, delay, or defraud their creditors.

(2) That while insolvent they transferred their property with intent to prefer creditors.

Julius Bros. did not appear or interpose any defense, and they were accordingly duly adjudicated bankrupts. From that decree no appeal was ever taken, and it must be taken as having conclusively established their status as bankrupts; the court having had jurisdiction. But the rule is that if the petition charges different acts of bankruptcy, as it did in this case, and the adjudication does not show upon which one of them it proceeded, and that is the case here, it does not render either charge res judicata in the further proceedings. In re Letson, 157 Fed. 78, 84 C. C. A. 582 (1907).

When the bankrupts subsequently and in due course asked for their discharge, it was refused, on the ground that they had made a transfer of their property with intent to hinder, delay, and defraud creditors; and from this order the appeal has been taken, and that question is therefore properly before this court, and is now to be determined.

[2] The courts make a distinction between a conveyance intended to hinder, delay, and defraud creditors and one executed with an intent to prefer some creditors over others. The Bankruptcy Act recognizes such a distinction between the intent to defraud and the intent to prefer. See Van Iderstine v. National Discount Co., 227 U. S. 575, 582, 33 Sup. Ct. 343, 57 L. Ed. 652 (1913). There is no necessary connection between the two The act provides that a bankrupt shall be denied his discharge if he has transferred his property with intent to hinder, delay, or defraud his creditors; but it does not refuse him his discharge, if he has made a conveyance for the purpose of giving a preference. Under certain circumstances, if he has given a preference, the transfer may be avoided, and the fact that a preference has been given is in itself an act of bankruptcy. And the sole question

now is, not whether the transfer gave a preference, but whether it was made with the intent to hinder, delay, or defraud creditors.

The words used in the act, "with intent to hinder, delay or defraud his creditors," have been borrowed from the statute of 13 Eliz. c. 5, relating to fraudulent conveyances, and have no doubt the same meaning in the Bankruptcy Act that the courts have given to them when used in the statute of Elizabeth. It is noteworthy that the old English statute, after enacting that transfers made with intent to hinder, delay, or defraud creditors should be "utterly void," went on to provide that this rule should not apply to bona fide transfers for a good consideration, and the courts have construed "a good consideration" in this connection to mean one founded on value. In the case at bar the transfer was made in entire good faith and for a valuable consideration.

The intent to defraud is something distinct from the mere intent to delay or hinder. But there is no distinction between delaying and hindering. The statute must be construed according to its reasonable intent and object, "and by a reasonable construction only such hindrance and delay as will operate as a fraud come within its operation." Bump on Fraudulent Conveyances (3d Ed.) p. 20. This author, after stating that the presence of intent is essential, goes on to explain that:

"The transfer must also be devised and contrived of malice, fraud, covin, collusion, or guile." Id. p. 22.

There are two classes of transfers under the act:

(1) Those which have been entered into with actual fraudulent intent.

(2) Those where, from the terms of the agreement or the nature of the transaction itself, the fraudulent intent is presumed to exist as an inference of law.

In the one class the fraudulent intent is always a question of fact, and in the other it is a question of law. Thus if one who is insolvent makes a voluntary transfer of his property, receiving no valuable consideration therefor, the law will infer the intent, even though he may have made the transfer with an honest motive. In such cases no evidence of intention can be received to change that presumption. Such a conveyance necessarily operates to hinder, delay, or defraud the creditors, and the grantor will in such a case be presumed to intend the natural and necessary consequences of his acts.

The law applicable to the facts of the case now before us may be found correctly laid down in the following statement:

"One in debt may sell his property, although the effect of the sale is to hinder creditors, if the sale is not made for that purpose, and a debtor, although in failing circumstances or insolvent, may dispose of his property in good faith to obtain money to meet his obligations, although such sale may in fact hinder and delay his creditors." 20 Cyc. 464, 465, and cases cited.

[3] We think this principle is decisive of this case. There was no intent to defraud, and no intent to hinder or delay, creditors. On the contrary, the intent was to sell the property for full value and use the entire proceeds to discharge as far as possible the obligations of the debtors, without a preference to any one over another.

The Supreme Court of Massachusetts more than 100 years ago had a case before it which in principle resembles that now before the court. In Hatch v. Smith, 5 Mass. 42 (1809), it appears that one Smith was insolvent, but desirous of satisfying his creditors, as far as the circumstances permitted. He decided that, if there was a general assent on the part of his creditors, he would make an assignment of the bulk of his property, probably all except his household furniture, to be equally paid pro rata to and among such creditors as should become parties to the agreement. The creditors were to release Smith from any further liability to them. The creditors generally assented, and the transfer of the property was made. One of the creditors, the plaintiff, Hatch, refused his assent. The transaction was entered into with deliberation, apparent fairness, and no corrupt intention. There was no resulting trust of any kind for the benefit of Smith, the insolvent. There was an absolute conveyance of Smith's interest to the use of such creditors as were parties to the contract. The amount of the debts due from the insolvent greatly exceeded the value of the property conveyed for their satisfaction. It is not necessary to consider the various objections which were made to this arrangement by the objecting creditor. They were carefully considered by the court and all were regarded as untenable. The conclusion of the court was stated as follows:

"We do not think that the contract between Smith and his creditors can be construed to have been made with an intent to defeat or delay his creditors."

In the course of the opinion the court made the following statement, which we adopt and apply to the case now before us:

"There was certainly nothing wrong, when Smith found himself in insolvent circumstances, to disclose his situation to his creditors, and to propose to pay them, in equal proportion, as far as his ability extended, and to obtain therefor a discharge from his debts. On the part of his creditors there was nothing iniquitous in acceding to such a proposal. And if there were any of Smith's creditors, who disliked the terms which were offered, and preferred the chance of obtaining satisfaction by other means, it was competent and right for them to refuse. But there seems no good reason why such refusal should prevent Smith and the other creditors from executing an accommodation, which appears so humane and just. Still, however, if any of the reasons, offered on the part of the plaintiff, are available to the purpose, for which they were intended—to show that the contract is void, as it respects the creditors who are not parties to it—the plaintiff must prevail, and the persons summoned as trustees adjudged to be so."

The learned District Judge seems to have relied upon South Danvers National Bank v. Stevens, 5 App. Div. 392, 39 N. Y. Supp. 298 (1896), where the Appellate Division of the Supreme Court of New York said:

"In addition, we think, with the learned trial judge, that the assignment was fraudulent in fact. There is no doubt as to a debtor's right to go to creditors with a view of effecting an amicable settlement, and in the course thereof informing such creditors that a failure to compromise will necessitate an assignment. But this is quite another thing from doing what was done here, namely, formally executing an assignment and then using it as a weapon for the purpose of coercing a creditor into an agreement by which he gives to the committee having charge of carrying out a composition the right to discharge the debt, and thus foregoing the right which the creditor has, not only to receive a distributive share of his debtor's property, but also to proceed for the balance against such debtor."

That statement must be construed in the light of the facts as they existed in the case then before the court. A partnership was insolvent, and in September, 1891, made an agreement in writing with its creditors that it would place its affairs in the hands of a committee of its creditors, who should realize upon its assets and divide the proceeds equitably among the creditors. One of the creditors declined to accede to the arrangement, and began an action against the parties on a note given by them. That action was commenced in March, 1892. Thereupon the committee of the creditors suggested that the firm make a general assignment, so that the creditor who had commenced the action might not secure a preference, and on June 16th the assignment was executed, and the attorney for the firm at once informed the plaintiff's attorney that the assignment had been made and *would be used unless the plaintiff made a settlement.* No agreement was reached and the plaintiff recovered his judgment on July 7th, and on the next day the assignment was filed. It was perfectly evident that the purpose of the assignment was to force the plaintiff to make a settlement. Such an assignment, of course, could not be sustained. Its very purpose was to hinder and delay the creditor. But the facts in that case are so entirely unlike the facts in the case at bar that the decision is not applicable to the present case.

In Sargent v. Blake, 160 Fed. 57, 61, 87 C. C. A. 213, 217 (17 L. R. A. (N. S.) 1040, 15 Ann. Cas. 58 (1908), an insolvent partner conveyed his interest in the partnership property to his partner, and the latter immediately thereafter paid to the mother of the insolvent $3,731.90 for the money which she had loaned to the son to put into the partnership business. There was no intent on the part of either partner to hinder, delay, or defraud creditors to any greater extent than the payment to the mother would necessarily hinder or prevent them from collecting their debts. The Circuit Court of Appeals in the Eighth Circuit held that the transfer was not illegal, as having been made with intent to hinder or defraud the creditors, and said, through Judge Sanborn:

"The only evidence that Maxwell intended to hinder or defraud the creditors of the partnership is that, while the firm and the partners were insolvent, King conveyed his interest to Maxwell, and the latter paid his mother in preference to his other creditors. The only way in which Maxwell could have made this payment in bad faith would have been to have made it in whole or in part in secret trust for himself, or with the actual intent to hinder or defraud the creditors of the company more than the mere payment of the debt to his mother out of the property of the former partnership, in preference to the claims of the partnership creditors, must necessarily have delayed or prevented their collection of their claims, and there was no evidence of any such trust or intent. The evidence was that he intended to pay his mother in preference to the partnership and to other creditors, that his mother had loaned him the money to engage in and conduct the partnership business, that he had purchased the interest of his partner, and that, as soon as the business and the property became his, he paid her the debt which he owed her. The facts that the payment to Mrs. Sargent had the inevitable effect to deprive the creditors of the partnership of an opportunity which they would otherwise have had to collect their claims in whole or in part, and that Maxwell knew that this would be its effect, and hence must have intended that result, do not establish the fact that he intended to hinder, delay, or defraud those creditors within the meaning of

section 67e. It is every intent to hinder, delay, and defraud creditors unlawfully only, not every intent to hinder or delay them in collecting, or to prevent them from collecting, their claims, that avails to avoid a transfer under that section. An insolvent debtor has the jus disponendi of his property until the commencement of proceedings in bankruptcy against him. He has the legal right to secure and pay his debts with it, provided always the security or the payment is not violative of any of the acts of Congress or any of the laws of the land. A preference of one creditor over others by such a payment or by such security, which is free from actual or constructive fraud, and from any purpose to affect other creditors injuriously beyond the necessary effect of the security or preference, is valid and lawful, and it cannot evidence such intent to hinder, delay, or defraud creditors as will make it void or voidable under section 67e. Coder v. Arts, 152 Fed. 943, 947, 82 C. C. A. 91 [15 L. R. A. (N. S.) 372]; Sabin v. Columbia River Lbr. & Fuel Co., 25 Or. 15, 34 Pac. 692, 695, 42 Am. St. Rep. 756; Lampson & Powers v. Arnold, 19 Iowa, 479, 484; Stewart v. Dunham, 115 U. S. 61, 66, 5 Sup. Ct. 1163, 29 L. Ed. 329."

So in the case at bar we regard it as a matter of no consequence, as far as the precise question now under consideration is concerned, that the sale of the assets at their full value may have hindered or delayed the protesting creditors. There was no intention to defraud the creditors; neither was there any intention to hinder or delay them, or to force them to a settlement. If as a result they have been hindered and delayed, it is nothing more than the inevitable result which follows from the sale by an insolvent, where the proceeds are used to pay certain creditors in preference to others. Such sales under certain circumstances can be set aside on the ground of the preference, but in the absence of the fraudulent intent they do not warrant the court in refusing to discharge the bankrupts. The insolvents had the jus disponendi of the partnership property at the time, and they transferred it to pay partnership debts. The plan to form the corporation and to purchase the assets for $1,550 and to pay all the creditors 25 cents on the dollar, including the two objecting creditors, was conceived before the interview with the attorney for the objecting creditors was held, at which the latter declined to consent to the settlement because his demands for a secret additional sum beyond that to be paid to the other creditors was refused, and a few days afterwards the corporation was organized in accordance with the previous understanding. The course the objecting creditors took had no influence whatever upon what was done by the insolvent partners, who were acting with the approval of the creditors' committee.

The decree below must be reversed, and the cause remanded, with directions to grant the bankrupts their discharge; and it is so ordered.

(218 Fed. 331)

LINTON v. OMAHA WHOLESALE PRODUCE MARKET HOUSE CO.†

(Circuit Court of Appeals, Eighth Circuit. October 26, 1914.)

No. 4031.

1. JUDGMENT (§ 585*)—RES JUDICATA.

Where a second action is on the same claim or demand as the first, and is between the same parties or their privies, the judgment in the first, if rendered on the merits, constitutes an absolute bar to the prosecution of the second.

[Ed. Note.—For other cases, see Judgment, Cent. Dig. §§ 1062–1064, 1067, 1073, 1084, 1085, 1092–1095, 1132; Dec. Dig. § 585.*]

2. JUDGMENT (§ 670*)—PRIOR SUIT—CAPACITY OF PARTIES.

Where, in a prior suit to quiet title to real property, L. was joined as a defendant, and, though his capacity as trustee was not disclosed in the title, such was the interest attributed to him in the body of the bill, the judgment in favor of the complainant in that suit was a bar to a subsequent suit by complainant as trustee for the same beneficiaries.‡

3. JUDGMENT (§ 585*)—CONCLUSIVENESS—RES JUDICATA.

Where, in a prior suit to quiet title, complainant was joined as a defendant, and sued as trustee for certain infant children, it was his duty to set up whatever claims of title he had; and his failure in that suit to rely on a certain deed did not entitle him, after an adverse decree, to maintain another suit to establish the trust, based on such deed.

[Ed. Note.—For other cases, see Judgment, Cent. Dig. §§ 1062–1064, 1067, 1073, 1084, 1085, 1092–1095, 1132; Dec. Dig. § 585.*]

Appeal from the District Court of the United States for the District of Nebraska; William H. Munger, Judge.

Suit by Adolphus F. Linton, trustee, etc., against the Omaha Wholesale Produce Market House Company. From a decree dismissing the bill, complainant appeals. Affirmed.

Charles Haffke, of Omaha, Neb. (Halleck F. Rose, John F. Stout, and Arthur R. Wells, all of Omaha, Neb., on the brief), for appellant.

F. H. Gaines, of Omaha, Neb. (E. G. McGilton and Sidney W. Smith, both Omaha, Neb., on the brief), for appellee.

Before ADAMS and CARLAND, Circuit Judges, and RINER, District Judge.

ADAMS, Circuit Judge. This was a suit in equity, brought by Adolphus F. Linton, the appellant, against the Omaha Wholesale Produce Market House Company, to charge lots 5 and 6 of block 164 in the city of Omaha, the legal title to which stood in the name of the defendant, with a trust in favor of complainant as trustee for his children, for an accounting of rents, income, and profits, and for other relief. The answer put in issue the allegations of the bill, and pleaded in bar a former judgment alleged to have been rendered in an action between the same parties, or their privies, involving the same issues as are here involved. Although evidence was taken on the merits, the cause by stipulation of parties was submitted to the court for

*For other cases see same topic & § NUMBER in Dec. & Am. Digs. 1907 to date, & Rep'r Indexes
† Rehearing denied January 11, 1915. ‡ See note at end of case.

final decision on the plea in bar. The court below sustained this plea and entered a decree dismissing the bill. From that decree the complainant appeals.

Did the court err in sustaining that plea? In answering this question the following pertinent facts are involved:

A common source of title is found in Phœbe Linton, wife of the complainant, who, it is claimed, entered into an antenuptial contract with the complainant, prior to their marriage in 1878, by the provisions of which a certain trust was created in favor of children which might be born of the marriage. This contract was not at the time recorded in the office of the register of deeds of Douglas county, Neb., but subsequently, for the purpose of affecting the public with knowledge of its contents, certain deeds were executed. Among them was one executed by Mrs. Linton (Mr. Linton joining), conveying the premises to Kate Remnant, and another one, simultaneously executed by Kate Remnant, conveying the premises to Mr. Linton. These deeds were dated March 31, 1897, and recorded June 2, 1902. On May 1, 1897, Mrs. Linton executed another deed conveying the premises to complainant. In this deed is found the following recital:

"Whereas, an antenuptial agreement and settlement was entered into between the said Phœbe R. E. E. Linton and the said Adolphus F. Linton on the 10th day of December, 1878: Now, in consideration of the agreement and settlement, witnesseth that the said party of the first part (Phœbe R. E. E. Linton), for and in consideration of the sum of $50,000 agreed to be paid and the sum of $1,000 * * * unto her well and truly paid by the party of the second part (Adolphus F. Linton) at or before the sealing and delivery of these presents, the receipt whereof is hereby acknowledged, has granted," etc.

After the acknowledgment of this last-mentioned deed appears a written statement as follows:

"I declare this deed has only just been found, after being lost for several years. This property was deeded to me to hold in trust for Charles S. Linton and Fryda A. B. Linton, my children. I declare I hold the legal title in trust for my children according to the terms of the marriage agreement made before marriage to my wife, P. R. E. Linton.

"[Signed] Adolphus F. Linton."

The deed dated May 1, 1897, with the declaration of trust written upon it, as just recited, was recorded in the office of the register of deeds of Douglas county, Neb., on August 6, 1906. By virtue of the foregoing conveyances Mr. Linton claims to own the lots in question as trustee for his children.

Defendant's title is deraigned from Mrs. Linton in this way: In 1892 she executed a mortgage conveying certain other real estate to the National Life Insurance Company of Vermont to secure the payment of a note for $25,000. In 1896 suit was instituted to foreclose this mortgage. Anticipating that the proceeds of sale of the mortgaged premises would not be sufficient to pay the amount due on the note, complainant in that suit specifically prayed for a deficiency judgment against Mrs. Linton. A decree of foreclosure followed in due time, and the proceeds of sale of the mortgaged property being insufficient to pay the mortgage debt, on March 15, 1901, a deficiency judgment was rendered against Mrs. Linton in the sum of $1,982.50.

Execution was duly issued on this judgment and in 1905 it was levied upon the lots in question in this case, as the property of the judgment debtor. They were subsequently sold under execution and purchased by one Anson E. Becker, to whom on August 28, 1905, they were conveyed by appropriate official deed.

By reason of a claim then made that Becker's title emanating from Mrs. Linton was not good, he, on September 19, 1905, instituted a suit in the district court of Douglas county, Neb., against Mr. Linton, Mrs. Linton, and their two children, Charles S. Linton and Fryda S. Blessing, née Linton, alleging in his bill that the defendants claimed some right, title, or interest in the lots so purchased by him, by virtue of the two Remnant deeds. It was alleged in the bill that since those deeds were executed Mr. Linton had filed some declaration of trust whereby he claimed to hold the premises in suit for his children by virtue of some antenuptial settlement between himself and his wife, when in truth and in fact the children had no right or interest in or to the premises, but that they were the sole and absolute property of Mrs. Linton, from whom he (Becker) deraigned his title; that the purpose and intent of the Remnant deeds was to defeat the collection of the judgment of the National Life Insurance Company, to defraud that company and other creditors of Mrs. Linton, and that the declaration of trust afterwards made by Mr. Linton in favor of his children conferred no right upon them as against the complainant who had the legal title. The complainant, Becker, then prayed that the deeds from Mrs. Linton to Kate Remnant and Kate Remnant to Mr. Linton be declared void and of no effect, and that Becker's title to the lots in question be quieted as against the claims of each and all of the defendants in that suit, and that he might have such other and further relief as might appear equitable and just.

The defendants in that suit joined issue on the substantial averments of the bill and pleaded affirmatively that the Remnant deeds were made for the purpose of executing the provisions of the antenuptial agreement and that Mr. Linton held title to the lots in question as trustee for his children.

On the issues so made the cause came on for a hearing on the merits and resulted on July 13, 1906, in a decree in favor of the complainant, Becker, adjudging the Remnant deeds null and void, canceling the same, and decreeing that Becker's title be quieted and confirmed in him as against the defendants and all persons claiming by, through, or under them. This judgment was affirmed by the Supreme Court of the state of Nebraska. See Becker v. Linton, 80 Neb. 655, 114 N. W. 928, 127 Am. St. Rep. 795.

Thereafter, on August 13, 1906, Becker conveyed the lots so acquired by him, being the lots now in controversy, to the defendant the Omaha Wholesale Produce Market Company. It is now claimed by this defendant, appellee herein, that the judgment in the case of Becker v. Linton constitutes a prior adjudication of the controversy disclosed by the pleadings and proof in this case, and that complainant is estopped by that judgment from prosecuting this case. Is this correct?

[1] The governing rule which we must apply in answering this question is this: If the second action is upon the same claim or demand as was the first, and is between the same parties or their privies, the judgment in the first action, if rendered on the merits, constitutes an absolute bar to the prosecution of the second action. It is a finality as to the claim or demand involved in the first action, concluding parties and those in privity with them, not only as to any matter which was offered and received to sustain or defeat the claim or demand, but as to any other admissible matter which might have been offered for that purpose. Cromwell v. County of Sac, 94 U. S. 351, 24 L. Ed. 195; Wiggins Ferry Co. v. O. & M. Railway Co., 142 U. S. 396, 12 Sup. Ct. 188, 35 L. Ed. 1055; Gordon v. Ware National Bank, 132 Fed. 444, 65 C. C. A. 580, 67 L. R. A. 550; Stewart v. Board of Trustees, 84 C. C. A. 451, 156 Fed. 773.

In the Becker suit it appears that Anson E. Becker, in whom was vested the legal title of record to the lots now in controversy, was the complainant; that Adolphus F. Linton, the complainant in the present action, his wife, Phœbe Linton, through whom Becker acquired title, and Linton's two children, Charles Linton and Fryda Linton, were the defendants. The purpose of that suit was to set aside the two Remnant deeds, whereby title to the lots was conveyed to Mr. Linton, to quiet title thereto in Becker, and for general relief. In the bill in that case it was averred that those deeds were executed for the alleged purpose of vesting title to the lots in question in Mr. Linton as trustee for his children, pursuant to the requirements of an antenuptial contract; whereas, in truth and in fact the deeds were resorted to as a device to hinder, delay, and defraud the creditors of Mrs. Linton. On these allegations issue was joined by all the defendants in that case, but in their answer they affirmatively invoked the obligation arising out of the antenuptial contract as a good consideration for the Remnant deeds, and alleged that Mr. Linton, by means of those deeds, acquired and held title to the lots in question as trustee for his children pursuant to the requirements of that contract.

It thus appears that the parties to this suit were the same as those in the Becker suit, excepting that the defendant in this case is the grantee of the complainant in that, and complainant Adolphus F. Linton, in this suit, was one of the defendants in that suit, joined with the beneficiaries, for whom he claimed to be acting in that suit as well as in this suit. In other words, the parties to the present action, although differently arrayed, are the same as those in the Becker suit, or in privity with them. The substantial issue in both cases is whether Mr. Linton, by virtue of the antenuptial contract and subsequent deeds, so acquired title to the lots as trustee for his children as to defeat the assertion of a claim thereto by creditors of Mrs. Linton, the former owner. In the first-mentioned suit Becker asserted absolute ownership in them as against a claim of defendants that Mr. Linton owned them as trustee for his children. In this suit Mr. Linton claims that he, as trustee for his children, is the owner as against the Market House Company, which claims to be the owner as grantee of Becker, claimant in the first suit. It is difficult to conceive of causes

which present a more perfect identity of parties or privies and of causes of action.

A lengthy argument is made in the brief of appellant's counsel to the effect that as Becker, prior to the commencement of his suit, had parted with his interest in the premises in question to the Market House Company, the defendant in this case, and as the latter company was not made a party to the Becker suit, it is not bound by the decree rendered in that suit, and consequently complainant is not estopped by it. This argument is constructed upon the assumption that Becker had disposed of the property before he commenced his suit. There is some vague and indefinite testimony, altogether oral and of a hearsay character, to the effect that Becker had commenced negotiation for the sale of the premises before he brought his suit, but that on account of claims made by complainant and those associated with him he was required to clear his title before a sale could be consummated. After a careful reading of all the record contains on this subject, we are unable to find in it anything but incomplete negotiation, and surely nothing of the certainty and dignity of a binding contract of sale of real estate. We accordingly refrain from further consideration of the interesting argument made on the erroneous assumption.

[2] It is contended by appellant's counsel that, as Adolphus F. Linton was not impleaded in the Becker suit as trustee, but as an individual, in his own right, he cannot be estopped from prosecuting this suit, in whch he appears in his capacity as trustee for his children, by the judgment rendered against him in that suit. Here, too, we think the assumption is unfounded. It is true he was not designated in the caption of the Becker suit as *a trustee,* but averments are found throughout the bill in that suit which most clearly disclose that he was there charged with making a claim to the lots in question solely as trustee for his children. It is quite common and altogether proper to describe the capacity of a named defendant or his relationship to other parties in the body of the bill, without disclosing them in the style of the action at all. Not only so, but the defendants in the Becker case pleaded affirmatively that Mr. Linton held title to the lots in question for his children, and the case was tried on that issue. That issue was, therefore, not only made, but fully tried, in the Becker suit. Cavender v. Cavender, 114 U. S. 464, 5 Sup. Ct. 955, 29 L. Ed. 212; City of Denver v. Mercantile Trust Co., 120 C. C. A. 100, 201 Fed. 790.

[3] Contention is made that the deed of Mrs. Linton to Mr. Linton, dated May 1, 1897, conferred upon him some right in addition to or different from the right acquired by him by means of the Remnant deeds, and that the present action, in so far as Mr. Linton grounds his right upon the deed of May 1, 1897, presents a different claim or demand from that involved in the Becker suit, and that as a result, the judgment in that case is not res adjudicata of his present claim. We fail to see any merit in this contention. Whether Mr. Linton acquired legal title to the premises by one deed or another is not material. The real question is whether he had so acquired title and de-

clared a valid trust in favor of his children as to extinguish the right of Mrs. Linton to the property and thus destroy Becker's title derived through her. The mere legal title, without the creation of a trust in favor of his children, to serve the purpose of a consideration for the deeds to him, would have constituted a voluntary conveyance only by Mrs. Linton, which would not have screened her property from the demands of her creditors. The existence of the trust was therefore the all-important issue in both cases. But let it be conceded that Mr. Linton did acquire some additional support to his pretensions by the deed of 1897; inasmuch as that was available to him in the Becker suit as a defense to the contention of Becker, the judgment rendered in that suit is just as conclusive against the prosecution by Mr. Linton of a second action based on that deed as it would have been had that deed been actually pleaded or proved as a part of his case in the Becker suit. The judgment in that case was a finality, not only as to what was offered and received to sustain or defeat the claim or demand therein involved, but as to any other admissible matter which might have been offered for that purpose. See cases supra.

We have carefully considered the arguments of counsel that the Becker judgment was obtained by fraud, as the result of a conspiracy between Becker and the defendant in this case; but for reasons unnecessary to be specified it is not convincing. The District Court in our opinion was clearly right in sustaining the plea in bar; accordingly it becomes unnecessary to consider some other questions relating to the merits of the case which were argued by counsel.

The decree of the District Court is affirmed.

NOTE.

Conclusiveness of Judgment as Dependent on the Capacity in Which the Parties are Sued.

I. In General.

Where a party is sued in a particular capacity, he is only bound in the capacity in which he is sued.

—(U. S.) Carey v. Roosevelt (C. C.) 81 Fed. 608;
(Ind.) Johnson v. Graves, 28 N. E. 315, 129 Ind. 124;
(Mo.) State ex rel. Hospes v. Branch, 134 Mo. 592, 36 S. W. 226, 56 Am. St. Rep. 533;
(S. D.) Sonnenberg v. Steinbach, 70 N. W. 655, 9 S. D. 518, 62 Am. St. Rep. 885.

(U. S.) A suit instigated by a private party for his sole benefit, in the name of the United States, may be barred by estoppel, operating against him alone, notwithstanding the United States is the formal complainant.—Union Pac. Ry. Co. v. United States, 67 Fed. 975, 15 C. C. A. 123, 32 U. S. App. 311.

(Ariz.) A judgment against a certain person for the conversion of certain property by seizure and sale of it is not admissible in a subsequent action by the same plaintiff against the same person as sheriff, and the sureties on his official bond, for the conversion of the same property by seizure and sale of it by the sheriff under execution.—Gray v. Noonan, 50 Pac. 116, 5 Ariz. 167.

(Colo.) To constitute a judgment in one cause res judicata in another, it must appear that the capacity of the parties to each is the same, or they must be in privity with the parties to the action in which such judgment was rendered, and hence judgment against one in her personal capacity is conclusive only as to her personal rights, and not of her interest as trustee.—Held v. Houser, 127 Pac. 139, 53 Colo. 363.

(Ga.) A judgment overruling a demurrer to a foreclosure proceeding filed against a person in both an individual and representative capacity, and which raises the question that the mortgagor in his representative capacity had no right to create the lien, is conclusive on the mortgagor both as an individual and in his representative capacity.—La Pierre v. Webb, 39 S. E. 344, 113 Ga. 820.

(Ind.) An estoppel by judgment binds the party only in the capacity in which he was sued.—Erwin v. Garner, 108 Ind. 488, 9 N. E. 417.

(Ind.) Parties to a judicial proceeding are bound by the judgment only in the capacity and right in which they appear.—Copeland v. Bruning, 87 N. E. 1000, rehearing denied 88 N. E. 877; Id., 87 N. E. 1004.

(La.) A plea of res judicata to a second suit between the same parties is not good, unless it is shown that they acted in the same capacity.—Slocomb v. De Lizardi, 21 La. Ann. 355, 99 Am. Dec. 740.

(Mass.) The doctrine of merger of cause of action in the judgment thereon has no application unless the subsequent action was brought against the party defendant in the same capacity as was the earlier action.—Frost v. Thompson, 106 N. E. 1009.

(Mass.) Judgment for defendants in action against all the parties to a note indorsed by "J. S. & Co., by J. S.," *held* to bar a subsequent action against J. S. as indorser and on his alleged liability as indorser by reason of writing the name of J. S. & Co. without authority.—Rogers v. Shea, 106 N. E. 1018.

(N. J.) Judgments are presumptively only conclusive against parties in the character in which they sue or are sued.—Sbarbero v. Miller, 65 Atl. 472.

(N. Y.) Where the validity of a conveyance was litigated and determined in a suit in equity, the representatives of the parties are estopped from litigating it in a new suit.—Burhans v. Van Zandt, 7 N. Y. (3 Seld.) 523.

(N. Y.) A judgment against a party sued as an individual is not an estoppel in a subsequent action in which he sues or is sued in a representative capacity.—Rathbone v. Hooney, 58 N. Y. 463.

(Pa.) Judgment was rendered in an action, "F. v. W.," for defendant, and another action was brought, "F. & W., to the use of F., v. W." *Held*, under a plea of former recovery, that the record in the first suit was evidence in the second.—Follansbee v. Walker, 74 Pa. (24 P. F. Smith) 306.

(S. C.) A decree within the scope of a bill in equity affecting lands devised to one for life, remainder to his issue, and in default thereof to such of a class as he should by will appoint, and, in default of appointment, remainder over, is binding on the contingent interest of the person to whom such appointment is afterwards made, though not a party to the bill in his capacity as a possible appointee, as the tenant for life, being a party, represents the interests of the contingent remaindermen.—Clyburn v. Reynolds, 31 S. C. 91, 9 S. E. 973.

(Tex.) Where the petition complains of a defendant in his individual capacity only, a judgment against him can only bind him in that capacity.—Pryor v. Krause, 168 S. W. 498.

II. Executors or Administrators.

(U. S.) Where a will bequeaths property to the executors, in trust for certain legatees, and an action is brought by another legatee to construe the will, service on the executors simply as such is sufficient to also make them parties in their capacity as trustees, and in that capacity they are bound by the decree.—Colt v. Colt (C. C.) 48 Fed. 385, affirmed 111 U. S. 566, 4 Sup. Ct. 553, 28 L. Ed. 520.

(U. S.) Judgment in an action by a widow individually to recover from an interstate carrier for the death of her husband, tried on the theory that it involved an action under the state law, barring recovery for negligence of a fellow servant, is not a bar to a subsequent action by her as administratrix under Employers' Liability Act April 22, 1908, c. 149, 35 Stat. 65, as amended by Act April 5, 1910, c. 143, 36 Stat. 291 (Comp. St. 1913, §§ 8657–8665) where recovery was asked for negligence of fellow servant.—Troxell v. Delaware, L. & W. R. Co., 33 Sup. Ct. 274, 227 U. S. 434, 57 L. Ed. 586, reversing judgment Delaware, L. & W. R. Co. v. Troxell, 200 Fed. 44, 118 C. C. A. 272.

(U. S.) A judgment against defendants as administrators with the will annexed is not binding on one of the same persons in his capacity as a trustee under the will, or upon the beneficiaries of the trust, as to property which had been delivered to the trustees prior to the institution of the action against the administrators, where it is not shown that, as a matter of fact, the defense was made on behalf of the trust estate, at its expense, and for its protection. Decree (C. C.) 91 Fed. 567, reversed.—Carey v. Roosevelt, 102 Fed. 569, 43 C. C. A. 320.

(U. S.) Where, in a suit against one as administratrix, her individual rights in the subject of the action were directly involved, and she, residing beyond the seas, executed a power of attorney to other defendants to represent her individually, and she was represented by counsel, who had previously represented her personally, and who assumed to represent her individually as well as administratrix, in the case which was prosecuted to the United States supreme court on the theory that she was personally a party, she cannot claim that she is not individually bound by the decree.—Brown v. Howard, 92 Fed. 537.

(U. S.) Judgment, in a suit under a state statute brought by plaintiff in behalf of herself and her minor children for negligent death of her husband, bars a subsequent suit by her as administratrix, under Employers' Liability Act April 22, 1908, c. 149, 35 Stat. 65 (U. S. Comp. St. Supp. 1909, p. 1172); difference in the capacity in which she sued not affecting the identity of the parties to the suit.—Troxell v. Delaware, L. & W. R. Co., 185 Fed. 540.

(Cal.) Where a devisee of land, in possession thereof pending settlement of the estate, is also executrix, a recovery in an action of trespass by her in her own name is a bar to her recovery as executrix for the same trespass. —Colton v. Onderdonk, 69 Cal. 155, 10 Pac. 395, 58 Am. Rep. 556.

(Cal.) A judgment denying the right of a widow to any credit for family allowances rendered in proceedings for the settlement of her account as administratrix is conclusive on her right to a family allowance in a subsequent proceeding therefor, instituted by her individually, she being in both proceedings the real party in interest, asserting individual, and not representative, rights.—In re Bell's Estate, 95 Pac. 372; Bell v. Thompson, Id.

(Cal.) Judgment for heir suing administrator, pending administration, to avoid her deed to him *held* not to bar a claim against him, on his accounting, for use and occupation; he being sued individually.—In re Piercy's Estate, 145 Pac. 88.

(Conn.) A decision that a will worked an equitable conversion of land of which testatrix died seised, in an action for the construction of the will by one, as executor, and as trustee of N., his infant daughter, against N., is not res judicata in a subsequent proceeding by said person individually, as heir of a deceased daughter, against himself as administrator of said deceased daughter, and N., and her guardian ad litem, in which the same question arises.—Appeal of Clarke, 39 Atl. 155, 70 Conn. 195.

(Ga.) A judgment in trover in favor of defendant individually is not a bar to a subsequent suit for the same property brought against the same defendant, but in his capacity as an executor.—Davis v. Davis, 30 Ga. 296.

(Ga.) To a bill by an executor for direction, and for relief, in which he is personally interested as creditor and surety of his testator, he is a party individually also, and as such is bound by the decree.—Jenkins v. Nolan, 79 Ga. 295, 5 S. E. 34.

(Ga.) In an action against one as an individual, where he files an answer which practically, though not in express terms, makes him, in his character as administrator, a defendant to the action, and defends in the right of his intestate's estate, the estate is concluded by the judgment rendered therein.—Braswell v. Hicks, 32 S. E. 861, 106 Ga. 791.

(Ga.) An adjudication that an applicant for letters of administration on the estate of a deceased person was not, for reasons alleged in a caveat to his application, entitled to such letters, constitutes no estoppel against this same person in his capacity as administrator of an heir at law of the decedent, on whose estate he sought to administer.—Pollock v. Cox, 34 S. E. 213, 108 Ga. 430.

(Ga.) Where a petition designated a defendant by name, followed by the word "executor," and he as executor filed a plea of prescription, moved for a new trial, joined in a supersedeas bond, and filed a bill of exceptions, the judgment was binding upon him in his representative capacity, though the word "as" was omitted in the petition before the word "executor."—Wadley v. Oertel, 78 S. E. 912, 140 Ga. 326.

(Ill.) The fact that the claim of one intervening in a partition suit, and attempting to make a legacy in his favor a charge on the realty, is barred by the decree therein, does not affect his right afterwards, as administrator, to sell the same land for the payment of a claim regularly established by another against the estate.—Sutton v. Read, 51 N. E. 801, 176 Ill. 69.

(Ill.) Where an executor de son tort has been sued by the administratrix for negligence in causing the loss of certain securities to the estate owning the same, a recovery in such action renders the question of the negligence of such executor de son tort res judicata in a chancery proceeding subsequently instituted by such executor to prevent the enforcement of such judgment, notwithstanding the plaintiff in the action at law sued in her official capacity and in the chancery suit is sued both as an individual and in her official capacity.—Rohn v. Rohn, 117 Ill. App. 512.

(Iowa) Judgment, in an action against the surviving mother and sole beneficiary of an intestate leaving both real and personal property, to recover the real estate, resulting in a dismissal on the merits, *held* conclusive as against a subsequent action by the same plaintiff against the mother, as administratrix and as an intervening individual defendant, to recover on a contract to devise all his property to plaintiff.—In re Park's Estate, 147 N. W. 850.

(Kan.) Where the nonresident executrix of a nonresident decedent is also the sole devisee of the land belonging to testator, and situated in the state, and where the land is levied on in attachment against the executrix in that capacity, such proceedings bind defendant as devisee. Judgment (App.) Donifelser v. Heyl, 52 Pac. 468, 7 Kan. App. 606, affirmed.—Heyl v. Donifelser, 54 Pac. 1059, 59 Kan. 779.

(Ky.) An executrix who in her individual capacity was party defendant to a suit and judgment, and has taken an appeal in her individual name and as executrix, cannot subsequently complain that she was not proceeded against as an heir, but only as an executrix, the question being res judicata.—Maddox's Ex'r v. Williams, 87 Ky. 147, 7 S. W. 907.

(Me.) The general rule that a judgment of a court having jurisdiction of the subject-matter and the parties and the process, rendered directly upon the point in question, is conclusive between the same parties, does not apply when the same person, though a party in both suits, is such in different capacities, —in the one, individually; in the other, as administrator.—Lander v. Arno, 65 Me. 26.

(Md.) Complainant, the administrator of A., who died in 1821, recovered in May, 1839, in an action of detinue, several negro slaves from defendant, the administrator of B., and then filed his bill in equity for the recovery of their hires and services from the death of A. In the pleadings in the action at law, the parties did not appear in their representative characters. *Held* that, from the time of the institution of that action, the verdict and judgment were conclusive between them.—Hughes v. Jones, 2 Md. Ch. 178.

(Mass.) A judgment in favor of an indorsee against the maker of a note is a bar to a subsequent action by the maker, in his capacity of administrator of the payee's estate against the indorsee, on the ground that he (the maker) was a creditor of the payee, and that the indorsement was fraudulent and inoperative as against himself.—Flint v. Bodge, 92 Mass. (10 Allen) 128.

(Mass.) There is no privity between an administrator suing for the conscious suffering of his intestate and the same administrator suing for the death, which renders the determination of the issues or admissions in one action binding in the other.—McCarthy v. William H. Wood Lumber Co., 107 N. E. 439.

(Miss.) A judgment on the merits in an action by the distributees of an estate against an administrator for an accounting is not a bar to an action

by such distributees against him as surety on the bond of his coadministratrix for misappropriation of the estate; he being a party in a different right in each action.—Washburn v. Phillips, 14 Miss. (6 Smedes & M.) 425.

(N. Y.) The amount of the judgment in an action against an administrator, personally, by a third person, claiming one-half interest in decedent's business, is not evidence against the administrator, on his accounting, of the value of the one-half interest concededly belonging to deceased, with the value of which it is sought to charge him. Order (Sup.) 61 N. Y. Supp. 175, 44 App. Div. 404, affirmed.—In re Yetter, 57 N. E. 1129, 162 N. Y. 615.

(N. Y.) A judgment against the sole devisee, as executor of the judgment debtor, is not binding upon her in an action brought against her as an individual to subject the lands devised to the judgment.—Lauby v. Gill, 86 N. Y. Supp. 718, 42 Misc. Rep. 334.

(N. Y.) A judgment establishing the liability of a testator as stockholder of an insolvent bank, rendered against his executrix, does not bind her individually as a devisee; but original proof of all the facts established in the action against her as executrix, and upon which the judgment was based, is required in the action against her as devisee.—Richards v. Gill, 122 N. Y. Supp. 620, 138 App. Div. 75.

(Pa.) Where a daughter, in a proceeding in the orphans' court for the settlement of her father's estate, contests the validity of a payment to her husband by the administrator, and the payment is sustained, and a credit therefor allowed, she cannot again, on a settlement of her own account as administratrix of her deceased husband, draw into question the validity of such payment, and claim the amount as her separate property, and not as a part of her deceased's husband's estate.—Appeal of Robinett, 36 Pa. (12 Casey) 174.

(Pa.) In ejectment against an executor and legatee as an individual, he was held to be estopped by an answer filed as executor in a former suit, treating the land devised by the will as that of testator, from setting up an adverse title against the estate. In a second ejectment against him he sought to avoid such judgment by showing that he had not participated with his coexecutor in returning the land for appraisement, and that he had not accepted the deed vesting title in him when such answer was made. *Held*, that the judgment was nevertheless conclusive on defendant, and plaintiff was entitled to recover. —Miller v. Springer, 88 Pa. 203.

(Pa.) Act Feb. 24, 1834, § 34, providing that, to charge a decedent's real estate in suits against his personal representatives, the widow, heirs, and devisees must be made parties, does not give the right to be twice heard on one issue by the same person; and a judgment against an executor who is also a devisee is conclusive against him as to the debt on scire facias.—Commonwealth v. Cochran, 146 Pa. 223, 23 Atl. 203.

(S. C.) An executor, who is made a party as executor to a suit affecting both his private and representative rights, will be bound in his private capacity by the decree, though not formally made party in that capacity.—Manigault v. Holmes, 1 Bailey, Eq. 283.

(S. C.) A decree against an administrator as such, on a bill to recover slaves under a gift of his intestate, will not bar a subsequent bill filed by the administrator as a creditor of the intestate to set aside the gift as fraudulent. —Jones v. Blake, 2 Hill, Eq. 629.

(Tex.) Executors of an estate had full authority to prosecute a suit for damages to community property regardless of who might be entitled to part of it, and a surviving wife suing as an executrix was bound by the judgment, not only as executrix, but as an individual.—San Antonio & A. P. Ry. Co. v. Miller, 137 S. W. 1194.

(Va.) A bill by a husband as administrator of his wife is not barred by a decision against him in her lifetime, in a suit to which she was not a party; the ground of that decision having been that under the statute of limitations the opposite party had obtained a legal title to the slaves sued for by five years' possession, commencing during the coverture, during which the right of the wife also accrued, and the husband never having had possession as husband.—Blakey v. Newby's Adm'rs, 6 Munf. 64.

III. Officers, Agents, and Attorneys.

(La.) A judgment generally against defendant, sued as attorney in fact, will not affect him in his own right.—Baudin v. Dubourg, 4 Mart. (N. S.) 496.

(Mo.) Where land sold under a mortgage, executed after issue, but before service of, a petition in ejectment, is purchased by an attorney for plaintiff in the ejectment suit, and judgment in the latter suit is rendered with his assent and approval, he is thereby stopped from asserting his title as against one holding under a sale by virtue of execution issued on the judgment in ejectment.—Shaw v. Padley, 64 Mo. 519.

(N. Y.) An action by a commissioner of highways in his own name as such to recover for failure to repair a highway, and an action for the same subject-matter in the name of the town, are neither by the same parties plaintiff nor by parties in privity of estate, and hence a judgment in the former does not bar the latter suit.—Town of Clay v. Hart, 55 N. Y. Supp. 43, 25 Misc. Rep. 110.

(Tex.) Plaintiff, as attorney for insured, pledged certain policies, after a loss, as collateral for the benefit of all assured's creditors except K. Thereafter insured transferred the policies in question to plaintiff as trustee to secure her entire indebtedness, including that of K. Plaintiff sued in the name of the pledgee on two of the policies, agreeing to indemnify him from all liability for costs, etc., and employed counsel, and conducted the same for his benefit as trustee, as well as for the benefit of K. Defendant answered to the merits, and the suit was subsequently settled, and judgment rendered that the pledgee take nothing, etc. Plaintiff thereafter sued as trustee to recover on the same policies. *Held*, that the real parties in interest, and the subject-matter in both actions were identical, and that the former judgment was a bar to the second.—Hartford Fire Ins. Co. v. King, 73 S. W. 71, 31 Tex. Civ. App. 636.

(Wis.) Where plaintiff was mayor of a city, and the city sued to compel a landowner to remove obstructions from a space delineated on a plat of the city as a street, claiming it to be a public street, and in such action it was adjudged that the city had never acquired any easement in the street shown, such adjudication involving a controversy as to a public right is no bar to a subsequent action by the plaintiff as an individual, seeking to enforce a private right in such street.—Rahr v. Wittmann, 132 N. W. 1107, 147 Wis. 195.

IV. Guardians and Tutors.

(Cal.) Where an infant sues by her father, as guardian, for damages for suffering and deformity caused by the act of a vicious animal belonging to defendant, and recovers judgment, such judgment is not available as a bar or admissible in evidence in a suit brought by the father in his own name for services rendered and expenses incurred in the cure of the wounds inflicted on the child.—Karr v. Parks, 44 Cal. 46.

(La.) A mortgage creditor of a father's succession is not bound by the terms and recitals of a judgment homologating the account filed by the latter as the tutor of his children. As to him they are res inter alios acta, and their contents must be proved in some proceeding to which he is a party, to bind him. —Succession and Community of Duhé, 41 La. Ann. 209, 6 South. 502.

(Mo.) A father, who acts as guardian ad litem for his children in a suit for partition brought against them, is not thereby made a party to the suit, so as to be concluded by a judgment in favor of the children, or so as to be estopped to controvert their title.—Terrill v. Boulware, 24 Mo. 254.

(Neb.) The mere appearance and consent of mother of wards in proceeding to sell their land does not devest any interest she may have.—Myers v. McGavock, 39 Neb. 843, 58 N. W. 522, 42 Am. St. Rep. 627.

(N. Y.) A father, in an action against a railroad company for injuries to his infant son, may allege and prove a former judgment in favor of the son, suing by a guardian ad litem, against the same defendant, for damages for the same injuries; and the record thereof may be sufficient proof that the injuries were caused solely by defendant's negligence.—Anderson v. Third Ave. R. Co., 9 Daly, 487.

(N. Y.) In an action by a mother to recover for the loss of services of her infant son, a judgment for plaintiff in a prior action brought by her, as guardian ad litem of the son, to recover on his behalf for the same injuries, is not admissible to show negligence of defendant and freedom of the son from contributory negligence.—Furlong v. Banta, 80 Hun, 248, 29 N. Y. Supp. 985.

(N. Y.) A judgment in an action by a father, as guardian ad litem of his infant son, to recover for personal injuries, is not conclusive in an action by the father to recover for the loss of his son's services because of the same injuries.—Gerstein v. Fisher (Super. N. Y.) 12 Misc. Rep. 211, 33 N. Y. Supp. 1120.

(Tenn.) A guardian, made defendant as such to a suit involving the title to property, is not such a party thereto as will render the decree binding on his individual rights.—Buchanan v. Kimes, 61 Tenn. (2 Baxt.) 275.

(Wash.) In case of injury to a minor there arise two cause of action—one in favor of the minor for pain and suffering and permanent injury, the other in favor of the parents for loss of services during minority, and expenses of treatment, which may be joined or tried in different actions—so that recovery in an action by the parent as guardian ad litem for the minor, in which the items of loss of wages during minority and expenses of the parent in treatment of his injuries are expressly excluded from the consideration of the jury, is not a bar to recovery in an action by the parent in her own right for such items.—Harris v. Puget Sound Electric Ry., 100 Pac. 841, 52 Wash. 299.

V. ASSIGNEES, TRUSTEES, AND RECEIVERS.

(Cal.) A judgment in favor of a receiver in his individual capacity is not a bar to an action against him in his representative capacity.—Elliott v. Hudson, 124 Pac. 103.

(Cal.) Judgment in suit by father and mother of husband against wife, to enforce parol trust, under which husband conveyed realty to wife, ordering a conveyance by the wife to the father and mother, *held*, in action by the wife for partition, that she was precluded from setting up an individual title.—Giuffre v. Lauricella, 143 Pac. 1061.

(Conn.) The considerations of public policy which support the rule of res judicata do not justify its extension to make a fact adjudicated in an action between two persons, litigating a cause of action which has arisen between them in their individual capacity, res judicata in subsequent actions brought by one, as assignee of a chose in action, against the other and a third person, which the plaintiff has purchased of such third person after his right therein has become fixed, and since the judgment in the first action was rendered.—Fuller v. Metropolitan Life Ins. Co., 35 Atl. 766, 68 Conn. 55, 57 Am. St. Rep. 84.

(Ill.) The determination in bankruptcy proceedings that property in a warehouse, the receipts for which were given by the bankrupt to secure a loan, was not in the possession of the bankrupt when the petition was filed is res adjudicata on assumpsit by the trustee and receiver for the proceeds of the sale of such property, where the parties are the same or in privity or represented by them.—Chicago Title & Trust Co. v. First Nat. Bank, 174 Ill. App. 339; Same v. Rogers, Id. 365; Same v. National Storage Co., Id. Judgments affirmed Chicago Title & Trust Co. v. National Storage Co., 103 N. E. 227, 260 Ill. 485.

(Mo.) A finding and judgment that defendant held funds as trustee will no more conclusively protect him as curator from a charge of misapplying the trust funds while acting in the latter capacity than a finding in his favor in the former suit would be conclusive against him in a suit against his sureties on his bond, charging a conversion of the funds prior to his appointment as trustee.—State ex rel. Hospes v. Branch, 134 Mo. 592, 36 S. W. 226, 56 Am. St. Rep. 533.

(N. Y.) An equity of redemption owned by an assignee in bankruptcy, as such, is not barred by a foreclosure in which he is made a party, and is served and appears in his individual name only, and in which his official character is in no wise mentioned.—Landon v. Townshend, 112 N. Y. 93, 19 N. E. 424, 8 Am. St. Rep. 712; Id., 129 N. Y. 166, 29 N. E. 71, affirming Landon v. Townsend, 60 Hun, 578, 14 N. Y. Supp. 522.

(N. Y.) The judgment against a plaintiff in an action by him in his representative capacity, as trustee for creditors, to set aside a conveyance as in fraud of creditors, based on the ground that the conveyance was free from fraud, is not conclusive against him on the question of fraud, in an action by him individually on his own account merely, against the same defendants for the same purpose.—Collins v. Hydron, 135 N. Y. 320, 32 N. E. 69, reversed 62 Hun, 286, 17 N. Y. Supp. 228.

(N. Y.) A mortgage was executed to one M., habendum "unto the said party of the second part [M.], his heirs and assigns, to his and their own proper use, benefit, and behoof, forever." Immediately following the description of the property was a clause that the mortgage was in trust to secure payment to various individuals, named therein, of certain sums. *Held*, that the lien of such a mortgage was not devested by a judgment foreclosing a prior mortgage, where M. was made a party individually only, and not as trustee.—McGuckin v. Milbank, 83 Hun, 473, 31 N. Y. Supp. 1049.

(N. Y.) A reversal by the United States Supreme Court of a judgment of a state court in a replevin action against a trustee in bankruptcy individually was not available as an adjudication of title to a purchaser from the trustee as trustee.—Murphy v. John Hofman Co., 141 N. Y. Supp. 900, 157 App. Div. 88.

(Tenn.) In an action by plaintiff as "trustee," the defendant set up res judicata, in an action brought by him against plaintiff, in which action plaintiff was not styled "trustee," but the rights he asserted in the action were those of such trustee. *Held*, the fact that plaintiff was not styled "trustee" in the first action was immaterial to the defense of res judicata.—Daniel v. Gum, 45 S. W. 468; Todd v. Daniel, Id.

(Wash.) Judgment, in an action to quiet title to land purchased in receivership and tax foreclosure proceedings against an unincorporated association in which its trustees alleged title for the benefit of those who had contributed to its purchase, *held* res adjudicata in a subsequent proceeding attacking the purchaser's title on the ground that title and right of possession were in the trustees for the benefit of the membership at large.—Burgess v. Peth, 140 Pac. 351.

(W. Va.) If a person has a vendor's lien on real estate which his vendee has conveyed to him as trustee by a subsequent trust deed to secure certain debts to other persons in which no reference is made to his debt, and a suit is afterwards brought to set aside such trust deed, and subject the property to the payment of a judgment to which suit such person is made a party as trustee, but in no other capacity, and there is no convention of the lien creditors or reference in the bill or proceedings to the vendor's lien, such person may, as against the purchaser, enforce his vendor's lien against the land in a subsequent suit.—McNult v. Trogdon, 29 W. Va. 469, 2 S. E. 328.

(217 Fed. 497)

BENNER LINE v. PENDLETON et al.

(Circuit Court of Appeals, Second Circuit. August 10, 1914.)

No. 283.

1. SHIPPING (§ 53*) — CHARTER — LOSS OF CARGO — SUIT BY CHARTERER AS BAILEE AGAINST OWNER.

Where the charterer of a vessel held itself out to the public as a common carrier, advertised for and solicited cargoes, fixed the freight rates, received and discharged the cargoes, and provided its own bills of lading in its own name, although they were signed by the master as customary, the charterer, and not the owner, was the bailee of the cargoes, and as such bailee entitled to maintain a suit in its own name against the shipowner for loss of a cargo through the unseaworthiness of the vessel.

[Ed. Note.—For other cases, see Shipping, Cent. Dig. §§ 214–218, 225; Dec. Dig. § 53.*]

2. SHIPPING (§ 121*)—CARRIAGE OF GOODS—WARRANTY OF SEAWORTHINESS OF VESSEL.

A shipowner either expressly or impliedly warrants his ship to be seaworthy and fit for the cargo and particular service for which she is engaged at the commencement of the voyage, and such warranty is an absolute undertaking, and covers latent defects not ordinarily susceptible of detection, as well as those which are discernible by inspection.

[Ed. Note.—For other cases, see Shipping, Cent. Dig. §§ 225, 449–451, 466; Dec. Dig. § 121.*

Implied warranty of seaworthiness, see notes to The Carib Prince, 15 C. C. A. 388; Neilson v. Coal Cement & Supply Co., 60 C. C. A. 179.]

3. SHIPPING (§ 132*)—LOSS OF CARGO—UNSEAWORTHINESS OF VESSEL.

The loss of cargo by the sinking of a schooner on a voyage from New York to Porto Rico *held*, on the evidence, due to the unseaworthiness of the vessel at the commencement of the voyage, where, although she was examined and pronounced seaworthy by experts before sailing, she began to leak seriously when only three days out, without having encountered any unusually bad weather, and her pumps proved to be so badly out of repair as to be practically useless.

[Ed. Note.—For other cases, see Shipping, Cent. Dig. §§ 471–487; Dec. Dig. § 132.*]

4. SHIPPING (§ 137*)—LIABILITY FOR LOSS OF CARGO—HARTER ACT.

Harter Act Feb. 13, 1893, c. 105, § 3, 27 Stat. 445 (U. S. Comp. St. 1913, § 8031), which exempts a shipowner from liability for loss of cargo in certain specified cases, does not relieve him from the duty of furnishing a seaworthy vessel at the beginning of the voyage, nor affect his liability for loss of the cargo arising from unseaworthiness.

[Ed. Note.—For other cases, see Shipping, Cent. Dig. § 492; Dec. Dig. § 137.*

Statutory exemptions of shipowner from liability, see notes to Nord-Deutscher Lloyd v. Insurance Co. of North America, 49 C. C. A. 11; Raeli v. New York & T. S. S. Co., 83 C. C. A. 294.]

5. SHIPPING (§ 137*) — LIMITATION OF LIABILITY — PERSONAL CONTRACTS OF SHIPOWNER.

A charter party, warranting the vessel to be seaworthy and in every way fitted for the voyage, signed by a firm as agents for the particular vessel, of which one of the partners was managing owner, was his personal contract, and he cannot limit his liability for loss of the cargo through the unseaworthiness of the vessel, under Rev. St. § 4283 (U. S. Comp. St. 1913, § 8021), or Act June 26, 1884, c. 121, § 18, 23 Stat. 57 (U. S. Comp. St. 1913, § 8028), which apply only to risks arising from

*For other cases see same topic & § NUMBER in Dec. & Am. Digs. 1907 to date, & Rep'r Indexes

the conduct of, or contracts made by, others than the owner, and imputed to him from the necessities of commerce.

[Ed. Note.—For other cases, see Shipping, Cent. Dig. § 492; Dec. Dig. § 137.*]

6. CONTRACTS (§ 1*)—"PERSONAL CONTRACT."

A "personal contract" is a contract made by the person or corporation to be bound, as distinguished from one imputed to such person or corporation.

[Ed. Note.—For other cases, see Contracts, Cent. Dig. § 1; Dec. Dig. § 1.*

For other definitions, see Words and Phrases, Personal Contract.]

Appeal from the District Court of the United States for the Southern District of New York.

This cause comes here on appeal from a final decree of the United States District Court for the Southern District of New York finding that the libelant is entitled to recover from the respondent Fields S. Pendleton nine-sixteenths of the amount of its damages, but that the said Fields S. Pendleton is entitled to limit his liability to his interest in the schooner Edith Olcott and her freight, and dismissing the libel as to the said Pendleton, which decree was entered on November 29, 1913.

The libelant is a corporation organized under the laws of the state of New Jersey and engaged in business as a carrier between the port of New York and ports in Porto Rico. The respondents are copartners engaged in business as ship brokers in the city of New York, borough of Manhattan, state of New York. They were the managing owners of the schooner Edith Olcott; the respondent Fields S. Pendleton owning in his own right nine-sixteenths of the vessel.

On July 7, 1910, the respondents chartered the vessel to the libelant for a voyage from New York to San Juan, Porto Rico. On August 6th the King Edgar, seeing the Olcott's signals of distress, came alongside and took the vessel in tow when in latitude 37.3 degrees N., longitude 65.3 degrees W., under an agreement to tow her to New York for $15,000. But on August 7th the tow rope parted and the vessel was abandoned, at 6 a. m., in a sinking condition; the water in her hold having then reached a depth of 13½ feet and gaining steadily despite all efforts to prevent it.

The charter party was signed in the name of Pendleton Bros., and the suit was brought against Pendleton Bros. and against Fields S. Pendleton individually. It having developed at the trial, however, that neither the firm of Pendleton Bros. nor the respondent Edwin S. Pendleton owned any share in the vessel or had any interest in the transaction except as agents, it was conceded by the libelant at the close of the trial, that recovery could be had only against the respondent Fields S. Pendleton, who was the managing owner of the vessel, and who hereafter will be referred to as the respondent.

For opinion below, see 210 Fed. 67.

Harrington, Bigham & Englar, of New York City (D. Roger Englar, of New York City, of counsel), for appellant.

Henry W. Goodrich, of New York City, for appellee.

Before COXE and ROGERS, Circuit Judges, and HAND, District Judge.

ROGERS, Circuit Judge (after stating the facts as above). This libel is filed by the libelant as bailee of a cargo of general merchan-

*For other cases see same topic & § NUMBER in Dec. & Am. Digs. 1907 to date, & Rep'r Indexes

dise laden on board the schooner Edith Olcott, which was lost at sea with her entire cargo on August 7, 1910. The value of the cargo amounted to $40,000, and to recover this sum the suit is brought. The theory of the suit is that the respondent failed to furnish a seaworthy vessel at the beginning of the voyage. The respondent denied the allegations as to the unseaworthiness of the schooner and alleged that due diligence was exercised to make the vessel in all respects seaworthy and properly manned, equipped, and supplied. And further answering the respondent stated that if it in any way appeared that the vessel was not seaworthy at the commencement of the voyage or thereafter that such unseaworthiness was without his privity or knowledge, and under the laws of the United States relating to limitation of liability on the part of vessel owners he is relieved of all liability growing out of the loss of said schooner, "and if any liability on the part of this respondent does exist, it is limited to his proportionate part of said schooner as hereinbefore stated."

[1] It was urged in the argument that libelant has no capacity to sue as a bailee for the loss of the goods. The contention was that the shipowner was the bailee of the cargo and not the libelant. The libelant held itself out to the public as a common carrier; it advertised for and solicited cargoes; it provided a dock to which the cargo was delivered; it chartered the vessel by which the cargo was to be carried, and employed the stevedores who put the cargo on board the ship; it fixed the freight rates and received the freight upon the shipments; and it provided its own form of bill of lading, which was in its own name, and not in the name of the ship, or in the name of the respondent, and it was signed at its office by the master or agents of the vessel. There is nothing out of the ordinary in that it was signed by the master of the vessel, that being the usual practice. No goods could be put on board the vessel except by virtue of a prior contract of affreightment with the libelant. The shippers knew only the Benner Line and contracted with the Benner Line, which took all the profits of the enterprise. The shippers or owners of the merchandise took no part in the selection of the ship by which the goods were carried. It is impossible to say under the circumstances of the case that the ship rather than the libelant was the carrier and that the libelant is without right to sue as bailee of the cargo. If the libelant was the carrier, and of that we have no doubt, then there can be no question but that the action can be maintained. In The Beaconsfield, 158 U. S. 303, 307, 15 Sup. Ct. 860, 861, 39 L. Ed. 993 (1895), the Supreme Court, speaking through Mr. Justice Brown said:

> "It is perfectly well settled that the carrier is so far the representative of the owner that he may sue in his own name, either at common law or in admiralty, for a trespass upon or injury to the property carried."

And see The New York (D. C.) 93 Fed. 495 (1899). In that case the charterer used the barge for the transportation of goods for third persons between New York and New London. The cargo was injured by water which reached it by leaking through the upper seams of the vessel. The court held that the charterer as carrier was so far the

representative of the owner of the cargo that he was entitled to sue in his own name for the injury done the cargo.

Of course no question can be raised as to the right of a bailee to maintain any proper action to recover for a breach of contract in connection with the bailed property during the existence of the bailment.

[2] There can be no question but that it is the duty of the shipowner to provide a ship which is fit and competent for the cargo and particular service for which she is engaged. The carrier either expressly or impliedly warrants the seaworthiness of the vessel at the commencement of the voyage. The Carib Prince, 170 U. S. 655, 18 Sup. Ct. 753, 42 L. Ed. 1181. And this warranty that the vessel is fit at the beginning of the voyage is an absolute undertaking, which is not dependent on the owner's knowledge or ignorance that the ship is in fit condition to undergo the perils of the sea. The Caledonia, 157 U. S. 124, 15 Sup. Ct. 537, 39 L. Ed. 644. The warranty covers latent defects, not ordinarily susceptible of detection, as well as those which are known or discoverable by inspection. In The Edwin I. Morrison, 153 U. S. 199, 210, 14 Sup. Ct. 823, 825, 38 L. Ed. 688 (1894), the Supreme Court adopted the language used by Mr. Justice Gray in the Circuit Court in which he said:

"In every contract for the carriage of goods by sea, unless otherwise expressly stipulated, there is a warranty on the part of the shipowner that the ship is seaworthy at the time of beginning her voyage, and not merely that he does not know her to be unseaworthy. * * * The warranty is absolute that the ship is, or shall be, in fact seaworthy at that time, and does not depend on his knowledge or ignorance, his care or negligence."

And in The Caledonia, 157 U. S. 124, 130, 15 Sup. Ct. 537, 540, 39 L. Ed. 644 (1895), the above doctrine is reaffirmed and Mr. Chief Justice Fuller said:

"The proposition that the warranty of seaworthiness exists by implication in all contracts for sea carriage, we do not understand to be denied; but it is insisted that the warranty is not absolute, and does not cover latent defects not ordinarily susceptible of detection. If this were so, the obligation resting on the shipowner would be, not that the ship should be fit, but that he had honestly done his best to make her so. We cannot concur in this view. In our opinion the shipowner's undertaking is not merely that he will do and has done his best to make the ship fit, but that the ship is really fit to undergo the perils of the sea and other incidental risks to which she must be exposed in the course of the voyage; and, this being so, that undertaking is not discharged because the want of fitness is the result of latent defects."

It may be conceded in the case at bar that the respondent thought that the Edith Olcott was in a seaworthy condition at the time she started on her voyage to Porto Rico. The respondent, before the vessel started on her voyage, instructed the most competent captain in his employ to put the boat in dry dock and have her put in seaworthy condition to go in the Gulf of Mexico to stay for 8 or 10 months. The man had been employed by the respondent's concern for more than 40 years, and the matter was turned over to him because, as respondent testified, there was no man in the country in his opinion who was more competent. "He is the only master," he testified, "that never cost us a dollar; he is the only man I know of that has had that success." That this man was a thoroughly competent man seems to be

admitted. But neither the good intentions of the respondent nor the competency of this captain can save the respondent from liability if notwithstanding what was done the vessel was not in reality in a seaworthy condition when this voyage was commenced.

To constitute seaworthiness the hull must be so tight, staunch, and strong as to be competent to resist all ordinary action of the sea and to prosecute and complete the voyage without damage to the cargo.

[3] The Edith Olcott was a four-masted wooden schooner of some 985 tons burden. She was 192.4 feet in length, 42.4 feet in breadth, and 18.4 feet in depth below the main deck. She was about 20 years old, having been built in 1890. The vessel was considered in insurance circles as good a risk as the usual vessel of her age. One of the experts who examined her before she started on this voyage reported that she was in "the pink of condition." Witnesses who inspected her testified that they found her seams and butts in first-class order, as were her rigging, decks, waterways, and chain plates, and that she was "in first-class condition," "one of the finest vessels" the witness had ever seen, and "fit to go around Cape Horn in."

The superintendent of the Dry Dock Company testified as to repairs made on the vessel in July and December, 1909, and in January and July, 1910. It appears that she was on the dock in July, 1910, and an an examination was made of her bottom and seams. The witness was asked whether at that time she was tight, staunch, and strong, and he answered, "I should say she was," but admitted he was testifying from a more or less general impression. The inspector of the American Bureau of Shipping, whose business it was to inspect vessels for the purpose of underwriting, testified that the vessel was "first-class," and that she was thoroughly examined for reclassification in 1905 and was given an A-1 rating for six years—a rating which would have expired in June, 1911, one year after the loss of the vessel occurred. He stated that the Edith Olcott was "exceptionally well built, exceptionally well cared for, and an exceptionally good vessel at the time she was lost," and that she was incapable of receiving any higher classification than was given her in his bureau. The evidence given by other inspectors was of similar import.

Now we pass to inquire what happened. She left New York for Porto Rico on Sunday, July 31, 1910. All went well until Wednesday, when it was discovered she had about 4 feet of water in the hold. The amount of water gradually increased until Saturday, when it had increased to 13 feet and she had to be abandoned with her cargo and became a total loss.

By way of explanation of the cause of the leak, the suggestion has been made that the vessel must have struck some submerged object on the night between August 2d and 3d. No suggestion to this effect was made until nearly three years after the disaster. The engineer of the Olcott testified that he felt some sort of a slight shock about 12 o'clock on Tuesday night, August 2d; that he did not think anything had happened, and that he turned in to bed; that he never mentioned it to any one, except that when the mate came around he said to him, "What struck her?" and got the reply, "Nothing as I know

of." It could not have been much of a shock, for neither the captain, nor mate, nor any one else on the vessel noticed it. No mention of any shock is found in the protest drawn up in the respondent's office and verified by the officers and crew of the Edith Olcott, and the answer contains no allusion to it.

When the testimony was taken a witness of wide experience at sea was asked whether in his opinion it was possible that a vessel could hit an obstruction with force enough to damage her, assuming that she is a seaworthy vessel, and cause her to leak, without its being noticed by persons on board who were awake. He answered that it was not. This testimony seems to us most credible. It is true that one of the respondent's witnesses, also a man of experience and character, testified that he thought the vessel must have struck a submerged wreck or something of that kind. He stated he had been on a vessel which struck a concealed obstruction which caused the vessel to leak, and that he had no knowledge at the time that the ship had struck it. But in that case the fact that the vessel had struck the obstruction was not discovered until the vessel had arrived at her destination and been discharged of her cargo. It is quite credible that a vessel might strike an obstruction and cause a slight leak without attracting attention at the time. But it is difficult to believe that a staunch and seaworthy vessel could meet with an obstruction serious enough to send her to the bottom without its being noticed by those whose business it is to keep watch over all that happens.

There is, too, another reason for thinking that the trouble was not occasioned by an obstruction striking the bottom of the ship. In this case the schooner started to leak, and when the weather got worse the leak got worse, and when the weather got better the leak also got better. A collision striking a vessel below the water line would not produce results of that kind. On the contrary, a leak so produced would be continuous, or else grow worse all the time. The account the witnesses give of this leak is the story of a vessel whose seams have opened, and not of one having a hole opened in her bottom. The protest filed on August 10th stated that on August 3d the leak was discovered, and:

"After working pumps one hour, sounded again, and found leak increasing. Latter part, wind and sea still increasing in force."

And on August 4th:

"8 A. M. Wind and sea the same. Vessel laboring and straining and shipping considerable water. Leak still beyond control of the pumps. Sounded pumps, and found eight feet of water in hold. Steam pumps kept going continually. Noon. Wind and sea moderating somewhat. Steam pumps holding water in control at eight feet for the remainder of this day."

And on August 5th:

"Wind and sea more moderate. Running before the wind and sea. Sounding pumps every hour, finding water still at eight feet. Steam pumps continually working. 8 P. M. Heavy squall from southwest, causing sea to rise rapidly. Vessel laboring heavily and shipping immense quantities of water. Leak increasing on pumps."

And on August 6th:

"10 P. M. Vessel plunging into head sea, shipping large quantities of water, and settling forward. Steam pumps going constantly. Sounded, and found water gaining. Midnight. Wind and sea still increasing. Sounded, and found ten feet of water in vessel. Vessel would not answer helm, was continually under water, and settling. Engine room and cabin flooded."

And on August 7th the weather was "serious" and the amount of water was "thirteen and one-half feet," and the vessel was abandoned.

While it may be possible that this vessel struck a submerged object without the knowledge of those on board, and that such a collision occasioned a loss, we think the possibility of such an occurrence is too remote to be made the basis of a judicial finding. The vessel had been on a voyage from Baltimore to Jacksonville, Fla., with a cargo of railroad iron, which is considered one of the hardest, if not the hardest, cargo than can be put into a vessel. She brought back a cargo of yellow pine ties. The voyage on which she carried the railroad iron was the last preceding the one on which she was lost. It was not unlikely that that voyage seriously weakened her and strained her seams, so that the heavy weather she encountered caused the seams to open and the ship to leak. While the weather was heavy, there was nothing so extraordinary about it that a ship in a seaworthy condition should not have been able to stand the strain. The fact that the vessel sprang so bad a leak, and that no satisfactory explanation of the fact has been made, indicates to us, as it did to the court below, that the vessel was not seaworthy as to her hull at the beginning of the voyage.

This brings us to a consideration of the vessel's pumping equipment. The testimony shows that she was provided with more pumps than most vessels. There were two large steam pumps and two hand pumps. One of the steam pumps—a six or seven inch wrecking pump—was in the engine room in the well deck forward, and was operated by a cogwheel on the shaft of the winch. The other steam pump, known as the "messenger pump," was situated on the main deck aft of the engine room, and was operated by a messenger chain, which ran from the shaft of the winch out through the side of the engine room. The messenger pump was a double pump, and had a capacity about equal to that of the wrecking pump. There was a fifth pump, but it was not designed for taking water out of the hold. It was a small circulating pump designed for running water through the condenser and for washing down decks, and is not to be regarded as part of the vessel's regular equipment for pumping water out of the ship. It is undisputed that within an hour after the wrecking pump was started some of the cogs were stripped from the wheel, rendering it thereafter impossible to make use of it. The port hand pump was tried, but with a result so unsatisfactory that it was decided to try the starboard hand pump. But after using it an hour and a half the men were unable to move it. Orders were given to hoist it out, and after this was done it was lashed down on the deck and never used again; the reason assigned for so doing being that it had been bent while being hauled out. Then the port hand pump was used again for something over an hour, when it had to be abandoned, and no effort was made again to use either of the

hand pumps. There was testimony tending to show that when the starboard hand pump was hauled out the suction pipe was found to have been rusted through. While the messenger pump was used, the testimony shows it did not work at anything like its full capacity. It was evidently in poor condition; one witness stating that, when he observed it, it was discharging "a mere dribble of water." The statement of some of the witnesses was to the effect that, had even one pump, either hand or steam, been in an efficient condition, the schooner could have made port without any assistance whatever.

There was testimony to show that the pumps were in good order before the vessel sailed. But over against this testimony stands the fact that three of these pumps broke down one after the other when an attempt was made to use them for the very purpose for which they were provided, and that the fourth pump did not respond effectually when it was put into operation. The court below thought the inference was irresistible that the pumps which failed were not fit to use when the ship began its voyage. That inference seems justified, and, if justified, the conclusion is unavoidable that the ship was not seaworthy in this respect, also, when she started on the voyage. One of the witnesses, a seaman on the King Edgar, which took the Olcott in tow, testified that he made an examination of the pumps and found them "in a rusty condition; the pipes were corroded, and if you put your hand against them they were liable to fall away and break." That refers to the hand pumps. The steam pumps "were in a condition that they would not suck; one which was working was in a bad condition, owing to the gipsy chain having no connecting links, and it was in a very poor state; it would not have lasted if we had tried to tow her back to New York." He also said:

> "I saw one pump working; the others would not work at all, owing to the pipes having holes in them. They would not suck. The pumps had been out of condition, for a good time, a very long time, I should say; they were corroded with rust."

Much of the testimony concerning the condition of the pumps is unworthy of credence, as coming from persons characterized very properly by the court below as "obviously a venal and dishonest lot," who offered their testimony against the respondent after they had offered their testimony in his favor for money and been refused. But it may be said of the pumps, irrespective of all such testimony, res ipsa loquitur—the thing speaks for itself. The pumps were not in condition to be used. Three of the pumps broke down, as soon as the emergency arose when they were needed, and there is no satisfactory explanation forthcoming telling why they broke down. We are forced to the conclusion, therefore, that as respects both her hull and her pumps the vessel was not seaworthy when she began her voyage.

[4] This being the case, the question arises whether the respondent, being liable upon the principles of the maritime law, can claim the benefit of the Harter Act. The Congress of the United States has passed from time to time various statutes limiting in greater or less degree the absolute liability of carriers by water. The most important of all these statutes is the act of February 13, 1893 (27 U. S. St. at L. 445,

c. 105, U. S. Comp. St. 1901, p. 2946), which is known as the Harter Act. That act in section 3 provides as follows:

"That if the owner of any vessel transporting merchandise or property to or from any port in the United States of America shall exercise due diligence to make the said vessel in all respects seaworthy and properly manned, equipped, and supplied, neither the vessel, her owner or owners, agent, or charterers shall become or be held responsible for damage or loss resulting from faults or errors in navigation or in the management of said vessel nor shall the vessel, her owner or owners, charterers, agent, or master be held liable for losses arising from dangers of the sea or other navigable waters, acts of God, or public enemies, or the inherent defect, quality, or vice of the thing carried, or from insufficiency of package, or seizure under legal process, or for loss resulting from any act or omission of the shipper or owner of the goods, his agent or representative, or from saving or attempting to save life or property at sea, or from any deviation in rendering such service."

This act has no application to the facts of this case. The Edith Olcott was not lost because of any fault in navigation or from dangers of the sea within the meaning of that expression in maritime law. There is no evidence tending to show any negligence, fault, or error on the part of the ship's officers or crew after the voyage began. The fault was not a "fault or error in navigation or management of the vessel."

The Harter Act in the section cited above does not relieve the owner from the duty of furnishing a seaworthy vessel at the beginning of the voyage, or affect his liability for the loss of the cargo arising from unseaworthiness. The trend of judicial decision has been to construe the Harter Act strictly. The law on this subject has been correctly stated as follows:

"The greatest amount of litigation under the act has centered around the third section. This section does not release the owner from the duty of furnishing a seaworthy vessel at the beginning of the voyage or affect his liability for damages to the cargo arising from unseaworthiness, but only exempts him from liability for damage arising from the risks therein designated when due diligence has been used to make the vessel seaworthy." 36 Cyc. 282.

[5] Congress has also passed acts limiting a shipowner's liability to the value of the vessel and the freight earned. The most important of these statutes was passed March 3, 1851, and which has been amended from time to time; the most important of the amendments being those of June 26, 1884, and June 19, 1886. The act of Congress provides for limiting the liability of the owner of the vessel for the loss of goods shipped, so that it shall not exceed the amount or value of the interest of such owner in such vessel and her freight then pending. Revised Statutes (2d Ed.) 1878, § 4283; 23 U. S. St. at L. 57, c. 121, § 18 (U. S. Comp. St. 1901, p. 2945); 24 U. S. St. at L. 80, c. 421, § 4 (U. S. Comp. St. 1901, p. 2945).

The act of March, 1851, enacted:

"That liability of the owner of any vessel, for any embezzlement, loss, or destruction, by any person, of any property, goods, or merchandise, shipped or put on board of such vessel, or for any loss, damage, or injury by collision, or for any act, matter, or thing lost, damage, or forfeiture, done, occasioned, or incurred, without the privity, or knowledge of such owner or owners, shall in no case exceed the amount or value of the interest of such owner in such vessel, and her freight then pending."

And the act of June 26, 1884, enacted that:

"The individual liability of a shipowner, shall be limited to the proportion of any or all debts and liabilities that his individual share of the vessel bears to the whole; and the aggregate liabilities of all the owners of a vessel on account of the same shall not exceed the value of such vessels and freight pending: Provided, that this provision shall not affect the liability of any owner incurred previous to the passage of this act, nor prevent any claimant from joining all the owners in one action; nor shall the same apply to wages due to persons employed by said shipowners."

The two acts have been regarded as being in pari materia and therefore have been construed as parts of one entire scheme.

The respondent insists that, if he is liable for the loss of the cargo on the Edith Olcott, he is entitled to limit his liability under this legislation; the loss having been incurred without his "privity or knowledge." But the libelant claims that the respondent cannot have the benefit of the act as it was not intended to apply to personal contracts.

This court decided in The Loyal, 204 Fed. 930, 123 C. C. A. 252 (1913), that a shipowner is not entitled to a limitation of liability for a breach of his personal contract. We held in that case that where a lighterage company contracted to do all the lighterage for an importer for a fixed term, which contract carried by implication a warranty that the lighters furnished should be seaworthy but because of the unseaworthiness of one salvage services were incurred to save the cargo, the company was not entitled to limit its liability for such expense. In announcing the principle we did in the above case we followed the decision made by the Sixth Circuit in Great Lakes Towing Co. v. Mill Transfer Co., 155 Fed. 11, 16, 83 C. C. A. 607, 612, 22 L. R. A. (N. S.) 769 (1907). In that case the court said:

"The purpose of Congress was, as we think, to relieve the shipowner from the consequences of those extraordinary risks which were imposed without limitation by the law of the admiralty as that law had been interpreted in this country. And by extraordinary risks we mean those risks arising from the conduct of, and contracts made by, those who are beyond the personal supervision and control of the owner and yet have legal authority to bind him to answer for their conduct or contracts; or, to express the thought in another way, that the liabilities intended by this legislation were those peculiar to him as a shipowner and had been imputed to him because of his relation to the ship, and not those liabilities, whether for torts or from contracts, which spring from his own personal conduct or stipulation. It seems to us altogether unlikely that Congress intended to qualify the power of an owner to make contracts in relation to his ship which by the universal law would be valid if made about anything else and would be enforced in the courts in common-law actions. It would be an anomaly that a party competent to do business should be unable to make a valid contract about his own affairs or be given such an immunity as to make his stipulations of uncertain value."

The question therefore arises whether the contract of the respondent is a personal contract. The court below thought that it was not. The District Judge said:

"The charter party signed by Pendleton Bros. was a charter party of the particular schooner Edith Olcott. Pendleton Bros., in signing that charter party, acted as the agents of the owners. The agreement was the owners' agreement chartering the schooner, and was an agreement made in the conduct of the schooner. Under such circumstances, in my opinion, the charter

party cannot be regarded as the mere personal contract of Pendleton Bros. It was the ordinary case of a charter party binding the vessel."

The learned District Judge thought the case at bar distinguishable from the case of The Loyal and from the Great Lakes Towing Co. Case, in that in those cases the contracts did not specify any particular vessel, by which in the one case the lightering was to be done and in the other by which the towing was to be done. We find no such distinction laid down in any of the authorities. It seems to us that the distinction which the courts have drawn relates to the manner in which the contract is made, rather than to the character of the contract itself. The rule which has been established is that the shipowner may limit his liability as to contracts or obligations entered into by others on his behalf, or imputed to him by law; but he may not limit his liability upon contracts which he personally makes or upon obligations which he personally assumes. If the particular contract is made by the shipowner in person, it is a matter of no consequence, so far as the question now under consideration is concerned, whether it relates to and binds a particular vessel or not.

[6] By a "personal contract" we understand to be meant a contract made by the person or corporation to be bound as distinguished from one imputed to such person or corporation. In Great Lakes Towing Co. v. Mill Transportation Co., supra, the court said:

"The contracts of the manager are the actual contracts of the owner, and are not of the same character as the contracts of the master made on a voyage or in foreign ports, and which are imputed to the owner from the necessities of commerce. The acts of the managing agent within the sphere of authority are as much the acts of the owner as if done by the owner himself. Only upon this theory could a corporation make what, for the purpose of making a distinction, is called a personal contract; that is to say, one which the owner himself or itself has made."

The argument has been advanced that the contract herein involved is in no way the personal contract of the respondent, and that no accident of signature either to the charter party or the bill of lading can make it a personal contract. It is said that it is such a contract as is incident to the ownership of vessels. But this is a case where the managing owner of a vessel personally negotiated and signed the contract, charter party, which contained a provision that the vessel should be "tight, staunch, strong, and in every way fitted" for the voyage. It purported to be made between the libelants and Pendleton Bros., agents of the schooner Edith Olcott, and was signed, "Pendleton Brothers, Benner Line." As the respondent, the principal owner of the vessel, personally signed it as his own agent, he bound himself. The fact that it was the ordinary case of a charter party binding the ship does not prevent its being the personal contract of Pendleton Bros.

The decree of the court below limiting the liability of the respondent Fields S. Pendleton to his interest in the schooner Edith Olcott and her freight pending for the voyage mentioned in the pleadings, and separately dismissing the libel as against the said Fields S. Pendleton, must to that extent be reversed, with costs. The amount due on the claim of the appellant will be ascertained, and such further proceedings had as the rules and practice of the court require.

(217 Fed. 508)

SPENCER v. READ et al.

(Circuit Court of Appeals, Eighth Circuit. September 7, 1914.)

No. 4100.

1. EVIDENCE (§ 253*)—ADMISSIONS OF CONSPIRATORS—STATEMENTS MADE AFTER END OF CONSPIRACY.

Where a conspiracy is charged, acts of one of the alleged conspirators, done while the conspiracy is pending, and in furtherance of its object, are deemed the acts of all, and may be shown in evidence against all, but after the conspiracy has come to an end, either through success or failure, admissions of one conspirator, by way of narration of past facts, are not admissible against others.

[Ed. Note.—For other cases, see Evidence, Cent. Dig. §§ 994–1002; Dec. Dig. § 253.*]

2. APPEAL AND ERROR (§ 970*) — TRIAL (§ 60*) — REVIEW — DISCRETION OF COURT—ORDER OF PROOF.

Declarations of alleged conspirators may be admitted before the conspiracy is sufficiently shown, the plaintiff undertaking to furnish such proof later, but this rests in the discretion of the trial court, and its ruling in admitting or excluding such testimony will not ordinarily be disturbed by an appellate court.

[Ed. Note.—For other cases, see Appeal and Error, Cent. Dig. §§ 3849–3851; Dec. Dig. § 970;* Trial, Cent. Dig. §§ 141–145; Dec. Dig. § 60.*]

3. EVIDENCE (§ 220*)—ADMISSIONS—FAILURE TO DENY STATEMENTS MADE IN NEWSPAPER ARTICLE.

A newspaper article containing statements concerning the acts of a party is not admissible in evidence against him merely because, when called to his attention, he did not deny the statements.

[Ed. Note.—For other cases, see Evidence, Cent. Dig. §§ 771–785; Dec. Dig. § 220.*]

In Error to the District Court of the United States for the Southern District of Iowa; Smith McPherson, Judge.

Action at law by E. R. Spencer, as trustee in bankruptcy of the Swanson Manufacturing Company, against Elbert A. Read, E. H. Mitchell, and Earl Sheets. Judgment for defendants, and plaintiff brings error. Affirmed.

This action was commenced December 29, 1911, in the United States District Court for the Southern District of Iowa, by the plaintiff, a citizen of Illinois, as trustee in bankruptcy of the Swanson Manufacturing Company, an Illinois corporation, against the defendants, Elbert A. Read, E. H. Mitchell, and Earl Sheets, citizens of the state of Iowa, to recover of said defendants $72,346.68, as the value of certain property alleged to have been wrongfully and fraudulently taken by them from the assets of said corporation in January, 1911. The trial resulted in a directed verdict and judgment for the defendants at the close of plaintiff's testimony, and the plaintiff brings error. The parties will be referred to as they were designated in the court below, the plaintiff in error as plaintiff, and the defendants in error as defendants.

*For other cases see same topic & § NUMBER in Dec. & Am. Digs. 1907 to date, & Rep'r Indexes

D. W. Higbee, of Creston, Iowa (Lester H. Strawn, of Ottowa, Ill., on the brief), for plaintiff in error.

W. E. Mitchell, of Sidney, Iowa (Tinley, Mitchell & Pryor, of Council Bluffs, Iowa, and Ferguson & Barnes, of Shenandoah, on the brief), for defendants in error.

Before SANBORN and CARLAND, Circuit Judges, and REED, District Judge.

REED, District Judge (after stating the facts as above). The petition is quite lengthy, but alleges in substance that the plaintiff is the duly appointed trustee in bankruptcy of the Swanson Manufacturing Company, a corporation organized in November, 1910, under the laws of Illinois, for the manufacture of farm implements, located at the city of Marseilles, in that state, which corporation was adjudged bankrupt by the United States District Court for the Northern District of Illinois July 25, 1911, and the plaintiff duly appointed by that court as trustee in bankruptcy of its estate, and authorized to prosecute this action; that Herman S. Swanson (who is named in the petition as one of the defendants, but has not been served with summons and has not appeared in the action) was the principal owner of the stock of that corporation, owning $244,470 of its capital stock of $250,000; that Swanson, prior to the organization of said corporation, was the principal owner of the stock, and manager of the Swanson Manufacturing Company, a corporation organized under the laws of Iowa for the manufacture of farm implements, and located at Shenandoah, in Page county, that state (these corporations, being of the same name, will for convenience be referred to as the Iowa corporation and the Illinois corporation, respectively); that the Iowa corporation had become largely indebted to various parties in or near Shenandoah, Iowa, including the defendants Elbert A. Read, E. H. Mitchell, and Earl Sheets; that many citizens of the city of Marseilles, Ill., and others were desirous that the Illinois corporation should be permanently located at that city, and, for the purpose of encouraging such location, agreed to take at their face value a large amount of the bonds of said corporation, provided it should have, in addition to its property in Marseilles, $50,000 in cash, paid in as part of its capital stock; that the officers of said corporation had represented to said citizens that one John Hoss, a resident of Moline, Ill., was about to take stock in said corporation and to pay in cash the sum of $50,000 therefor, to be and remain a part of the capital stock of such corporation; that some time in January, 1911, said citizens of Marseilles and others had collected and paid into the First National Bank of that city about $40,000, to be used in paying for bonds to be issued by the Illinois corporation to be secured by a trust deed upon its property; that said John Hoss failed to pay in said sum of $50,000 for stock of said corporation, and for that reason the citizens of Marseilles and others declined to accept and pay for the bonds of said corporation; that the defendants, well knowing the premises, combined together to defraud and injure the said citizens of Marseilles and other creditors of said Illinois corporation, and agreed that they would obtain the said investment in the bonds of said corporation by citizens

of Marseilles and others, and thereafter wrongfully and unlawfully deprive said corporation of its capital and property and cause said corporation to become bankrupt; that, in pursuance of said conspiracy, the directors of said corporation secretly, fraudulently, and without notice to their creditors passed a resolution that said Illinois corporation should assume the indebtedness of the Iowa corporation, which said assumption of indebtedness was wholly without consideration and made solely for the purpose of robbing, cheating, and defrauding the creditors of the said Illinois corporation; that the defendants, in further pursuance of said conspiracy, deposited money to the amount of $25,000 to the credit of said Illinois corporation, falsely pretending that the same was paid in by said John Hoss according to the original representations made by the officers and directors of said corporation; that thereupon the said citizens of Marseilles and other creditors of said Illinois corporation purchased the bonds of said company and paid into said company the sum of $54,500, believing that said money would be used in the general business of said Illinois corporation; that said John Hoss wholly failed to pay in said sum of $50,000 for stock in said corporation, and the defendants then and there falsely misrepresented to the creditors of said corporation that he had so paid in said sum; that the defendant Elbert A. Read, in pursuance of said conspiracy, paid in the sum of $25,000, falsely pretending that the same came from the said John Hoss, and so informed the said citizens of Marseilles and other creditors, for the purpose of inducing them to buy said bonds, for the purpose of wrongfully obtaining money for the purchase of the bonds of said Illinois corporation; that the said Elbert A. Read and other defendants, with the consent and connivance of said Herman S. Swanson, and in pursuance of the conspiracy aforesaid, immediately and wrongfully took away said sum of $25,000 on January 27, 1911, and said sum was not in fact added to the capital and property of said corporation, but was wrongfully and fraudulently withdrawn from the capital and assets of said corporation by the defendants on said January 27, 1911, in pursuance of said conspiracy; that on the same day the defendants fraudulently took from the capital and assets of said corporation the further sum of $41,610.49 out of the moneys paid in for the bonds of said corporation, in pursuance of said conspiracy, for the pretended purpose of paying debts of the Iowa corporation, in which the defendants were personally interested; that afterwards, on January 31, 1911, said defendants, in pursuance of said conspiracy, wrongfully and fraudulently withdrew from the capital of the Illinois corporation the further sum of $5,736.19; that, by reason of and in pursuance of said conspiracy, said defendants have wrongfully, unlawfully, secretly, and without consideration taken from the capital and assets of said Illinois corporation the total sum of $72,346.68, for which sum judgment is asked against the defendants.

The answer of the defendants Elbert A. Read, E. H. Mitchell, and Earl Sheets is also quite lengthy. It will be best understood by stating briefly the ultimate facts alleged; without following the order thereof. As amended, it admits that the Swanson Manufacturing Company of Illinois was organized under the laws of that state in November, 1910, by Herman S. Swanson and certain citizens of Illinois; that it was ad-

judged bankrupt and the plaintiff duly appointed its trustee in bankruptcy in July, 1911, as alleged in the petition; that said Herman S. Swanson was, prior to its organization, a stockholder in and manager of the Swanson Manufacturing Company, a corporation organized under the laws of Iowa, and located at Shenandoah, in that state; and alleges that it was engaged in the manufacture and sale of farm implements and other implements and machinery at that place; that its capital stock was $65,000, $35,000 of which was preferred and $30,000 common stock; that the defendant Sheets owned 2 shares of the preferred stock, and the defendant Mitchell 40 shares, and the defendant Read held 5 shares of the preferred stock for another party; that other than this they had no interest in said corporation and were not and are not creditors thereof; that said Herman S. Swanson was president and manager of said corporation, and some time in the fall of 1910, at a meeting of its board of directors, informed said corporation that he desired to change its location to Marseilles, Ill., if an adjustment of its affairs at Shenandoah could be satisfactorily arranged; that subsequently the said Swanson, together with citizens of Marseilles, Ill., organized the Illinois corporation under the laws of that state; that at a legal meeting of the stockholders of the Iowa corporation, consisting of more than a majority thereof, these defendants were appointed by its stockholders a committee to adjust its affairs with the Illinois corporation; that, prior and subsequent to the organization of the Illinois corporation, it was contemplated that that corporation would purchase the property, real and personal, of the Iowa corporation; that after its organization, and for the purpose of accomplishing that purpose, the stockholders and directors of the Illinois corporation authorized and empowered said Herman S. Swanson (who was one of said officers) to negotiate for and purchase from the Iowa corporation all of its said property for the Illinois corporation; that thereafter, and on December 15, 1910, said Swanson, acting for and on behalf of the Illinois corporation, entered into a written agreement with these defendants, acting for and on behalf of the Iowa corporation, whereby the Illinois corporation agreed to purchase, and these defendants, acting for and on behalf of the Iowa corporation, agreed to sell, to the Illinois corporation all of its property, real and personal, at and for the sum of $47,392.68 (and certain debts of the Iowa corporation), to be settled and paid for on or before January 5, 1911; that said agreement was duly approved by both corporations, and said amounts were in fact paid to these defendants January 28, 1911, for the property of the Iowa corporation and for the benefit of its stockholders, which property had been previously conveyed to the Illinois corporation, and such conveyance placed in escrow with the First National Bank of Marseilles, Ill., until the purchase price was paid, a copy of which contract is attached to the answer as Exhibit A and made part thereof. The defendants deny all allegations of fraud, conspiracy, or other wrongdoings upon their part alleged in the petition, and deny all matters not specifically admitted. Many other matters are alleged, but they are mainly matters of evidence only and need not now be more specifically stated.

There was no reply by the plaintiff to this answer.

The plaintiff's testimony tends to show that in November, 1910,

there was a public meeting of citizens of Marseilles, Ill., held in that city, at which a committee of three of its citizens was appointed to solicit funds to induce the Swanson Manufacturing Company to locate in Marseilles; that members of this committee, together with Herman S. Swanson, called upon people they thought would subscribe or contribute to this purpose, and a subscription blank was circulated by them, a condition of which is:

"This subscription is contingent upon fifty thousand ($50,000.00) dollars in cash being added and paid into said company, in addition to the present property and assets of the said Swanson Manufacturing Company."

Mr. Tummel, of the soliciting committee, testified that Mr. Herman S. Swanson went around with the committee soliciting subscriptions, and said that they would employ about 125 men to start out; that they had plenty of capital; that Mr. Hoss was to put in $50,000 in cash and establish a credit of $100,000, which would give them plenty of money to do business with; that the committee was called to the First National Bank of Marseilles to meet Mr. Swanson and John Hoss. Hoss and Swanson both stated to us there what they intended to do. Hoss said he was going to put in $50,000 of his own money and establish a credit of $100,000. He was going to finance it, and he knew it was going to be a good thing. Mr. Swanson made similar statements when he was with the committee soliciting signatures to the subscription agreement. The testimony of the other committeemen is substantially the same.

The testimony further tends to show that a number of persons subscribed and paid for bonds of the Illinois corporation upon the strength of these statements and the condition of the subscription blank; but there is no evidence that either of the defendants, Read, Sheets, or Mitchell, participated in the solicitation of subscriptions or had anything to do with the organization of the Illinois corporation or its location at Marseilles, or made any statements as to what Hoss was to do, other than the alleged declarations of Swanson, hereinafter mentioned.

There was also testimony that a committee of citizens of Marseilles was appointed in November, 1910, to go to Shenandoah and investigate the Iowa corporation and the value of its property; that this committee reported in substance, among other things, that it found the Swanson Manufacturing Company was an active concern, needing more capital, a better location, and better financial facilities, hence the necessity for removal from Shenandoah; that the company stood well at home, and its product and business were well spoken of elsewhere by people well posted on business of the kind transacted; that the value of the personal property at Shenandoah was:

Machinery to be removed to Marseilles	$18,000 00
Shenandoah plant, which is a good property and said to be worth	30,000 00
Patterns, office furniture, and fixtures to be removed	15,033 81
Raw material	35,000 00

Mrs. Flora Bender, a witness on behalf of plaintiff, testified: That she worked for the Swanson Manufacturing Company of Shenandoah as stenographer and for H. S. Swanson from November, 1908, until

they moved to Marseilles in January, 1911; that she did a little work for the Swanson Manufacturing Company of Illinois under the direction of C. A. Brown, the auditor; that she left Marseilles July 8, 1911; that Mr. Swanson had private files aside from the files of the company. After identifying some correspondence that she wrote for Swanson while acting as stenographer, she testified:

"I remember the Iowa committee composed of Messrs. Read, Sheets, and Mitchell coming to Marseilles in the latter part of January, 1911. As I understood it, they made settlement with the Swanson Manufacturing Company for the stockholders of the Iowa corporation. I think they, or some of them, had been at Marseilles a day or two before that. I remember of Elbert Read coming back. I learned from the talk in the office at that time that they had been to Moline. When they returned, a settlement was made. There was present Read, Mitchell, Sheets, and, I believe, Fulton, of Marysville, Kan., and also Swanson. They were in the office of the company, most of the time in Swanson's room. I wrote the receipt that the committee signed. Exhibit C is the receipt, which reads as follows:

"Marseilles, Illinois, January 27, 1911.

"We, the undersigned committee, representing the preferred stockholders of the Swanson Manufacturing Company of Shenandoah, Iowa, hereby acknowledge receipt of one check for $~~21,610.49~~ 46,610.49 and one check of $20,000.00 to apply as follows:

Preferred stock	$18,943 50
First Nat. Bank, Shenandoah, Iowa	12,500 00
Green Bay Lbr. Co., " "	978 74
Hanson Lbr. Co., " "	952 36
First Nat. Bank, Council Bluffs, Iowa	9,881 39
To cover interest	300 00
Total	$43,555 99

"[Signed] E. H. Mitchell.
"Earl Sheets.
"E. A. Read,
"By Earl Sheets."

She then identified checks of the Swanson Manufacturing Company of Marseilles, in the handwriting of Mr. Bender (her husband), signed in the name of the company, by H. S. Swanson, as president, in favor of E. A. Read, Earl Sheets, and E. H. Mitchell, as follows:

Exhibit D, check dated January 27, 1911, amount	$46,610 49
Exhibit E, check dated January 27, 1911, amount	20,000 00

"There was no check that I know of for $21,610.49, as stated in the receipt originally."

Exhibit F is check dated January 31, 1911, in favor of First National Bank of Council Bluffs, Iowa, for $1,873.75.

All of the foregoing checks were drawn on the First National Bank of Marseilles, Ill., and were paid to the payees. The witness continued:

"I am pretty sure Mr. Read was familiar with the financial condition of the Swanson Manufacturing Company of Shenandoah the latter part of 1910. He always seemed to be very anxious to have their note taken care of. As I remember, he used to have Swanson sign his own name on the back of the notes. Q. Did H. S. Swanson explain to you and Mr. A. C. Bender the discrepancy of $25,000 between the receipt that has been offered in evidence here and the checks? (Objected to by the defendants.) By the Court: You know,

and I know, and every lawyer knows, that declarations such as this are not competent, but courts will admit them, because, regardless of that, the professional statement of counsel is that they will connect up. Do you make this statement that you will? Mr. Strawn: I think we have done so already. The Court: Oh, well, if you do not, you are wasting your time, and I will have to take it all away from the jury. (Objection overruled. Defendants except.) A. We had a conversation with Mr. Swanson one day, about noon, in the office regarding the discrepancy of $25,000 on the books which Mr. Brown, the auditor, did not know to what account we must charge it. Mr. Swanson said he guessed * * * he might just as well tell Mr. Bender what he knew about it, because Mr. Brown was a man that would find it out anyway. And he told us that this money (this $25,000) was a plan suggested by Elbert Read; that he loaned Mr. Hoss this $25,000 to be deposited in the First National Bank of Marseilles, Ill., until the news went out that John Hoss had put up the $50,000, and that the bondholders in Marseilles would then pay in their money, as they refused to pay it in until John Hoss had put up the $50,000, and that this money was left in the bank but a few hours, and the news went out, and then they began to pay in their money. I said to Mr. Swanson, 'Do you think that was exactly fair to the Marseilles people?' or something of that kind. And he says: 'Well, that is not the question, whether it is fair or not. That was the only thing to do, and they saw, unless the money was forthcoming in some manner, the deal would fall through with. So he had to put it up in some way.'" Mr. Mitchell: I move to strike that out. The Court: It will remain in on this statement of counsel that they will connect these three defendants with that. (Overruled.) The Court: Mr. Strawn, let us end this once and for all. When do you say that these defendants brought that money back here to Iowa? Mr. Strawn: They brought it back in three bunches at three different times. The Court: When? Mr. Strawn: January 31st. The Court: Now, I understand that the last money was brought back to Iowa on January 31, 1911. (The Court now rules that anything said either orally or in writing subsequent to January 31, 1911, by any person other than one of these three defendants is excluded from the case and will be excluded as offered hereafter.)"

A. C. Bender (husband of Mrs. Bender) testified:

"I went with the Swanson Manufacturing Company in the latter part of 1910. I was general office man. I could not say in round numbers how much they were owing. I went to Marseilles with the company. My work was on the books. I left Marseilles about the middle of July. The Mr. Brown spoken of in the evidence was an auditor in the employ of the New York Audit Company of Chicago. I remember E. A. Read, Earl Sheets, and E. H. Mitchell coming to Marseilles in January, 1911. I do not remember how long they were there. They came, went away, and came back again. I remember the day that they had some sort of settlement in the office. Swanson told me to draw these checks Exhibits D and E, one for $46,610.49 and the other for $20,000. When Mr. Brown and I were working on the books, we could not make the entry properly. When crediting the First National Bank of Marseilles with the $25,000, we could not find what account to charge it to. We debited it to John Hoss. Just why we did it I cannot explain. When these checks were given, the three committeemen, Read, Mitchell, and Sheets, were present. When the receipt was given, Sheets and Mitchell were present, but Read had left."

There is some further testimony as to the contents of the books.

Mrs. Bender was recalled for further cross-examination and testified as follows:

"By the Court: Mrs. Bender, I want to ask a question or two before you proceed: You testified yesterday afternoon to a conversation with Mr. Swanson in the presence of your husband, as to what Mr. Swanson said; a part of the testimony being: 'He said, "Well, I might as well tell you, because Mr. Brown is a man that will find this out."' When did this conversation take place? A. I would not be safe in saying, but it was shortly after the settle-

ment and when Mr. Brown was there trying to make the entry on the books. It was after the checks were issued. The Court: That is all."

There is some other evidence not necessary to be noticed in the view we take of the case.

At the close of the plaintiff's testimony the defendants moved for a directed verdict in their favor upon the following grounds: (1) That the petition does not state a cause of action. (2) That the allegations of the petition are not supported by any evidence. (3) That the evidence shows that the petition was insufficient for the reason that it seeks to recover certain moneys which it is alleged were paid to the Swanson Manufacturing Company of Shenandoah, Iowa, and preferred stockholders of said company, and certain creditors of said company, and that it does not tender back to these defendants any of the property which the Swanson Manufacturing Company of Marseilles, Ill., received from the Swanson Manufacturing Company of Shenandoah, Iowa, and that the plaintiff, as trustee, stands in the shoes of the Swanson Manufacturing Company of Illinois. (4) That the Illinois Company has appropriated to its own use a large amount of property received from the Shenandoah corporation and all of the assets of said corporation, and has failed and neglected to surrender back or tender back any of the assets of said corporation, which they received as a consideration for parting with the money now sought to be recovered. (5) That the evidence fails to show any fraud, misrepresentations, or conspiracy upon the part of these defendants, or any of them, in procuring a contract of settlement between these two companies.

This motion was sustained, and judgment entered for the defendants, to which the plaintiff excepted and assigns as error that the court erred: (1) In sustaining the objections of the defendants to the questions propounded to the witness by plaintiff as to the actions and conduct of Herman S. Swanson in regard to the alleged conspiracy done and performed after January 31, 1911. (2) In permitting defendants to introduce evidence tending to show that the Swanson Manufacturing Company of Illinois had received notes of John Hoss to the amount of $40,000. (3) In taking from the consideration of the jury the testimony of Mrs. Bender with reference to conversations, which she either took part in or heard between H. S. Swanson and her husband with reference to what Mr. Swanson said by way of explanation, wherein Swanson said that he might as well tell that Mr. Brown would get onto it anyway; the same being with reference to the conduct of the defendants Read, Mitchell, and Sheets in obtaining money from the Swanson Manufacturing Company of Illinois on and prior to January 31, 1911. (4) In sustaining the objection of defendants to the introduction of Exhibit K, being a newspaper called the Morris Herald, and particularly the article therein contained headed "Get Rich Quick," etc.; the same forming the subject of conversation between the witness Mr. Fishbaugh and the defendant E. H. Mitchell. (5) In sustaining the motion to direct a verdict for the defendants. (6) In holding that the plaintiff, as trustee in bankruptcy of the Illinois corporation, only stands in the shoes of that corporation.

[1] The first and third assignments of error challenge the correctness of the ruling of the court in excluding the testimony of the witnesses Flora Bender and her husband, A. C. Bender, as to the declarations of Herman S. Swanson, made some time after the issuance of the checks by him as president of the Illinois corporation to the defendants. The plaintiff's cause of action, as alleged in the petition, is grounded upon an alleged conspiracy between the defendants, Read, Sheets, and Mitchell, and Herman S. Swanson, to fraudulently induce citizens of Marseilles (not named in the petition) to pay their several subscriptions for bonds of the Illinois corporation, to the end that the defendants, with the connivance and consent of Swanson, might wrongfully and fraudulently withdraw from the treasury of the Illinois corporation the money, or a part of it, paid by such citizens for the bonds subscribed by them to pay for the property and certain debts of the Iowa corporation.

It is undoubtedly true that, in all cases where a conspiracy is shown, the act of one conspirator in the prosecution of the enterprise is considered the act of all, and may be shown in evidence against all. But only those acts and declarations are admissible under this rule which are done and made while the conspiracy is pending, and in furtherance of its object. After the conspiracy has come to an end, either by success or by failure of the enterprise, the admissions of one conspirator by way of narration of past facts are not admissible in evidence against the others. 1 Greenl. Ev. § 184a (16th Ed.); Logan v. United States, 144 U. S. 263, 309, 12 Sup. Ct. 617, 36 L. Ed. 429; Brown v. United States, 150 U. S. 93, 98, 14 Sup. Ct. 37, 37 L. Ed. 1010; Kansas City Star v. Carlisle, 108 Fed. 344, 361, 47 C. C. A. 384.

There is no substantial evidence, either direct or circumstantial, of any agreement or arrangement whatever between Swanson and the defendants, or either of them, to obtain money or property fraudulently from the Illinois corporation. The most that can be said of the evidence is that there are some circumstances tending to show that the defendants, or some of them, loaned to Hoss $25,000, upon his note for that amount to enable him to pay in part his subscription to the capital stock of the Illinois corporation, which sum was shortly after withdrawn upon the transfer of such note to the corporation. In the absence of direct evidence of an unlawful conspiracy, a wide latitude is allowed in admitting circumstantial evidence to prove its existence, and that was permitted by the trial court in this case.

[2] Declarations of the alleged conspirators may be admitted before the conspiracy is sufficiently shown, the plaintiff undertaking to furnish such proof later; but this rests in the discretion of the trial court, and its ruling in admitting or excluding such testimony will not ordinarily be disturbed by an appellate court. Kansas City Star v. Carlisle, 108 Fed. 344, 361, 47 C. C. A. 384, above. Swanson for some reason was not served with summons in this case, though named in the petition as a defendant, and is not therefore a party to the suit, nor was he called as a witness. The declarations of Swanson, testified to by Mrs. Bender, were made some time after the alleged con-

spiracy had come to an end by the receipt of these checks from the Illinois corporation. There was no error, therefore, in excluding the testimony of Mrs. Bender and her husband as to the alleged declarations of Swanson. If a conspiracy was to be proven against these defendants, it must be by testimony introduced in the usual way, so as to afford them an opportunity to cross-examine the witness or witnesses by whom such conspiracy is sought to be established. It could not rightly be established by statements of others directly admitting such conspiracy, or from which it might be inferred after it had ended.

The second assignment of error challenges the correctness of the ruling admitting testimony tending to show that the Illinois corporation had received notes of $40,000, or some other amount, from John Hoss. This testimony was developed upon cross-examination of plaintiff's witness as to the contents or entries upon the books of the Illinois corporation. There was no reversible error in permitting such cross-examination.

[3] Complaint is next made of the exclusion of an article published in the Morris Herald of August 11, 1911 (a newspaper published at Morris, Ill.). To understand the merits of this complaint, it is necessary to state, in addition to the testimony already stated, that there was offered in evidence by the plaintiff a clipping from this issue of the newspaper mentioned, entitled "Get Rich Quick Deal, Marseilles People Stung by High Finance, Swanson Deal." This clipping is an attempt at "a humorous write-up" of what purports to be the efforts of citizens of Marseilles to secure the location at that place of the Swanson Manufacturing Company in lieu of some manufacturing plant recently removed from Marseilles to Moline, Ill., and the subsequent bankruptcy of the Swanson concern, and the resulting loss to the Marseilles citizens. A witness testified that he had a copy of this paper of August 11th at his place of business in Shenandoah some time in the fall of 1911, and, as the defendant Mitchell was passing one day, called to him and said, "I did not know you were such a scoundrel or bad man as this," and showed him the article; that Mitchell read it aloud in his presence and the presence of some others and laughed and said, "That is about the way we got the money; that he had had many difficult transactions in which it was difficult to get money; that this was difficult, and that the credit belonged, not to him, but to Read; that without Read's method they would never have succeeded in getting this money." He did not deny in my presence any of these statements in the transactions. At best this clipping would be admissible against Mitchell only as an admission of the truth of the facts stated therein, because he did not, upon reading the article, deny them; but he says the credit for securing the money belonged to Read, not to him, and surely the clipping is not admissible against Read. Nor is it admissible as against Mitchell, for one is not called upon to deny the truth of matters appearing in the public press concerning him, to which his attention may be called, under the circumstances shown in this case, to avoid personal responsibility for such matters. There is no merit in this assignment of error.

It is also urged that the court erred in holding that the plaintiff, as trustee in bankruptcy of the Illinois corporation, stands in the shoes of that corporation and succeeded only to its rights as against these defendants; the contention being that the trustee, under section 70e of the Bankruptcy Act (Comp. St. 1913, § 9654), succeeds to the rights of any creditor of the corporation, and may recover against the defendants to the same extent that any creditor of the corporation might have recovered against them. Admitting, without deciding, this to be so, it suffices to say that, under the testimony adduced by the plaintiff, no creditor of the bankrupt corporation could have recovered against these defendants upon the grounds alleged in the plaintiff's petition.

Finally it is urged that there was error in directing the verdict for the defendants. It must suffice to say of this assignment that we have carefully considered the entire evidence in behalf of the plaintiff, and are of the opinion that, if a verdict was returned thereon for the plaintiff, it would have been the duty of the court to set it aside for want of sufficient support in the evidence. It was therefore the duty of the court to direct a verdict for the defendants and to render judgment thereon for costs against the plaintiff.

The judgment is affirmed.

(217 Fed. 518)

SPOKANE & I. E. R. CO. v. CAMPBELL.

(Circuit Court of Appeals, Ninth Circuit. October 19, 1914.)

No. 2366.

1. MASTER AND SERVANT (§ 111*)—INJURIES TO SERVANT—RAILROADS—REGULATION—SAFETY APPLIANCE ACT—"LOCOMOTIVE ENGINE"—"ENGINEER."

Safety Appliance Act (Act Cong. March 2, 1893, c. 196, § 1, 27 Stat. 531 [U. S. Comp. St. 1913, §§ 8605–8612]), requires common carriers engaged in interstate commerce by railroad to equip their "locomotive engines" with power driving-wheel brakes, so that the "engineer" may control the speed without requiring brakemen to use the hand brakes for that purpose. By Act March 2, 1903, c. 976, 32 Stat. 943 (U. S. Comp. St. 1913, §§ 8613–8615), such requirement was extended to all trains, locomotives, tenders, cars, and similar vehicles on any railroad engaged in interstate commerce. *Held*, that while the words "locomotive engines" and "engineer" as used in such act were primarily intended to refer to a steam-propelled engine, and to the operator thereof, respectively, such words were sufficiently broad to include an electric motor and the motorman, and that the act was therefore applicable to electric motors used to haul trains engaged in interstate commerce.

[Ed. Note.—For other cases, see Master and Servant, Cent. Dig. §§ 215–217, 255; Dec. Dig. § 111.*

For other definitions, see Words and Phrases, First and Second Series, Engineer, Locomotive.]

2. TRIAL (§ 359*)—SPECIAL VERDICT—REQUISITES.

Where the entire controversy is dependent on a special verdict, it will prevail only when it finds all the facts essential to a determination of every material issue in the case.

[Ed. Note.—For other cases, see Trial, Cent. Dig. §§ 857–860, 875, 877, 878; Dec. Dig. § 359.*]

---

*For other cases see same topic & § NUMBER in Dec. & Am. Digs. 1907 to date, & Rep'r Indexes

3. COURTS (§ 352*) — FEDERAL COURTS — RULES OF DECISION — LOCAL LAW — SPECIAL VERDICT.

Since the local law with reference to submitting special findings with a general verdict does not control the federal courts with respect to the mode in which causes are required to be submitted to a jury, such courts are not bound by the rules obtaining in the local courts for interpreting such verdict; the general rule being that the court, in determining what judgment shall be entered on a special verdict, will not look to the evidence, nor beyond the pleadings and the judge's record.

[Ed. Note.—For other cases, see Courts, Cent. Dig. §§ 926–932; Dec. Dig. § 352.*

Conformity of practice in common-law actions to that of state court, see notes to O'Connell v. Reed, 5 C. C. A. 594; Nederland Life Ins. Co. v. Hall, 27 C. C. A. 392.]

4. MASTER AND SERVANT (§ 297*)—INJURIES TO SERVANT—ACTIONS—GENERAL AND SPECIAL VERDICT—CONSTRUCTION—EFFECT.

In an action for injuries to an interurban motorman, engaged in interstate commerce, in a collision between his train and a regular train moving in the opposite direction, on a single track, the jury found a general verdict for plaintiff, a special verdict that plaintiff before starting on his run received a written train order directing him to meet a "special" moving in the opposite direction at A., and special findings that the air brakes on plaintiff's train failed immediately before the collision, and that plaintiff left his starting point in violation of orders, before the regular train arrived, which was the proximate cause of the accident. *Held*, that such latter finding was a mere conclusion of law and not a finding of fact, and since the element of proximate cause, where concurrent acts of the employer and employé contribute to cause the injury, is eliminated by the Employers' Liability Act (Act April 22, 1908, c. 149, 35 Stat. 65 [U. S. Comp. St. 1913, §§ 8657–8665]), and especially where the contributing act of the employer is in derogation of a duty imposed by the Safety Appliance Act, defendant was not entitled to a judgment on the special verdict.

[Ed. Note.—For other cases, see Master and Servant, Cent. Dig. §§ 1195–1198; Dec. Dig. § 297.*]

5. APPEAL AND ERROR (§ 977*)—NEW TRIAL (§ 6*)—QUESTIONS REVIEWABLE —DISCRETION OF COURT.

The grant or refusal of a new trial in the federal courts rests in the sound discretion of the trial court, and the result cannot be made the subject of reversal on a writ of error.

[Ed. Note.—For other cases, see Appeal and Error, Cent. Dig. §§ 3860–3865; Dec. Dig. § 977;* New Trial, Cent. Dig. §§ 9, 10; Dec. Dig. § 6.*]

In Error to the District Court of the United States for the Northern Division of the Eastern District of Washington; Frank H. Rudkin, Judge.

Action by Edgar E. Campbell against the Spokane & Inland Empire Railroad Company. Judgment for plaintiff, and defendant brings error. Affirmed.

See, also, 188 Fed. 516.

On the afternoon of the 31st day of July, 1909, at about 4:30 o'clock, the defendant in error, plaintiff below, he being the motorman, started with his train of three cars—the motor car and two trailers—out of Cœur d'Alene over the electric line for Spokane. When he had proceeded a short distance from Cœur d'Alene, a mile and a half or two miles, he ran into another train coming in the opposite direction, whereby he was injured, and a number of passengers on his train lost their lives, while others were more or less injured. The train he was running was a special, known as No. 5, and he testifies that

*For other cases see same topic & § NUMBER in Dec. & Am. Digs. 1907 to date, & Rep'r Indexes

he received written orders for running it, also oral orders from the conductor, and that he moved out on the line in pursuance of such orders; that when he had gotten out on the road some distance and observed the approaching train, he set the air brakes, which held for a short time only, then let go, supposedly by the escape of the air, and he thereby lost control of his train, and was unable to stop it or further check its speed. As a consequence he ran into the train coming from the other way, the latter train, however, having been brought to a stop before the collision. In this testimony plaintiff has corroboration.

According to the rules of the company, which were in evidence, a special train is expected to keep out of the way of the regular trains; that is to say, the special must take note of the schedule running time of all regular trains, and be on sidings at the stations where and when the regulars will pass, so as to allow a free track to the regulars. Specials are run on orders from the dispatcher with reference to another special, and the motorman is expected to make the passing stations as directed.

The defendant's testimony tends to show: That plaintiff, together with the conductor, was given and received a running order for No. 5 before leaving Cœur d'Alene station, directing No. 5 to meet No. 4 at Alan station, which order was in the following language: "Motor 5 will run Spl CD Alene to Spokane meet Spl 4 East at Alan." And, further, that the train was equipped with air brakes and other equipment for controlling and stopping the train, and that these had been properly and recently tested for determining their efficiency, and found to be in good order.

The cause having been tried before a jury, the following special and general verdicts were returned:

"Verdict.

"We, the jury in the above-entitled cause, find for the plaintiff, and fix the amount of his damages at the sum of $7,500.00 (seventy-five hundred dollars)."

"Special Verdict.

"Did the plaintiff Campbell receive, before leaving Cœur d'Alene, train order No. 53, reading as follows: 'Train Order No. 53. From Spokane 7—31—1909. To Motor 5 at C. D. Alene Station: Motor 5 will run Spl. C. D. Alene to Spokane meet special 4 east at Alan.' Yes."

"Special Finding I.

"Q. Were the air brakes on Campbell's train immediately before the collision insufficient to enable Campbell to control the speed of the train? A. Yes."

"Special Finding II.

"If you find that plaintiff left Cœur d'Alene in violation of his orders, then answer this question: Was that leaving in violation of his orders the proximate cause of the accident? Yes."

Motion was interposed for judgment in favor of defendant on the special findings, notwithstanding the general verdict, which was denied. Later a petition for a new trial was also denied, and judgment rendered for plaintiff. Error is prosecuted from this judgment.

Graves, Kizer & Graves, of Spokane, Wash., for plaintiff in error.

Belden & Losey, of Spokane, Wash., and H. Lowndes Maury, of Butte, Mont. (Henry R. Newton, of Spokane, Wash., of counsel), for defendant in error.

Before GILBERT and ROSS, Circuit Judges, and WOLVERTON, District Judge.

WOLVERTON, District Judge (after stating the facts as above). Three questions are urged upon our attention: First, whether the

Safety Appliance Act of Congress has application to interstate electric railroads, it being contended that the defendant was not bound to equip its motors with air brakes; second, whether the trial court should have allowed the motion for judgment non obstante; and, third, whether the motion for new trial should have been granted.

[1] Section 1 of the Safety Appliance Act of Congress, March 2, 1893, requires common carriers engaged in interstate commerce by railroad to equip their locomotive engines with power driving-wheel brakes and appliances for operating the train-brake system, and to equip a sufficient number of cars in the train with power or train brakes so that the engineer on the locomotive drawing such train can control its speed without requiring brakemen to use the common hand brake for the purpose. 27 Stat. 531. By an amendment of this statute (Act March 2, 1903, 32 Stat. 943) the provisions and requirements thereof relating to train brakes, automatic couplers, etc., are made to apply to all trains, locomotives, tenders, cars, and similar vehicles used on any railroad engaged in interstate commerce, and to all other locomotives, tenders, cars, and similar vehicles.

There can be no doubt that when the primary act was passed, electrically propelled trains were not within the legislative mind, and where "locomotive engine" occurs reference was had to a steam-propelled engine. And likewise when "engineer" is spoken of, it had relation to a person in charge of a steam-propelled locomotive. But this does not signify that other locomotive or motor engines, and that persons driving other motor cars, may not come within the scope and intendment of the act. The purpose of the Legislature was to provide, among other things, for a more efficient and effective way of handling trains in interstate commerce, so that the speed and movement of the train might be regulated and controlled, and, when desired and in cases of emergency, readily brought to a stop, all from the engine and by the one person in charge of it, thereby to lessen the danger to employés and the public incident to the operation of railroads.

The electric railroad has since come into very general use, with its driving engines called motors, and its employés in charge of the engines are called motormen or enginemen. These railroads, notwithstanding, are common carriers of property and persons, the same as steam railroads, and have employés and come into relation with the public in the same way, the only essential difference being that electricity has taken the place of steam as a propelling agency or force, with differently contrived engines, suited to the harnessing of the propelling agency to the use desired, so that the broad purpose of the Legislature applies as completely to the one kind of railroad as to the other. In a narrower sense, a locomotive engine is spoken of as an engine propelled by steam; but when the statute, as the amendment does, extends the provisions of the act to apply to all trains, locomotives, tenders, cars, and similar vehicles used on any railroad engaged in interstate commerce, and to all other locomotives, tenders, cars, and similar vehicles, it broadens the significance so as, without question, to include motors electrically propelled, used upon railroads engaged in interstate commerce. So, also, the original act, with its amend-

ment, includes the operators of such engines, whether called engineers or motormen. We think the statute is broad enough to require that electrically propelled engines and trains engaged in interstate commerce, as well as steam-propelled engines and trains, shall be equipped with air brakes for their efficient operation and control.

The next question may be more clearly resolved by understanding what were the issues presented to the jury for their verdict. The complaint, so far as it is pertinent to the inquiry, alleges:

"(4) That plaintiff on said date aforesaid was directed by the agents, officers, and employés of said defendant to take his said train No. 5, and to proceed from said town of Cœur d'Alene to the city of Spokane, and that plaintiff was given orders, directing him to meet and pass regular train No. 20 at the town of Alan; that when rounding a curve and nearing the station of Gibbs, state of Idaho, which is a point between Cœur d'Alene City, Idaho, and the town of Alan, this plaintiff saw a train coming from the opposite direction and running on the same track upon which said plaintiff's train was running, which said train plaintiff is now informed and believes was Regular Train No. 20.

"(5) That upon the coming into view of said train No. 20, plaintiff used all due diligence to bring his motor upon said train No. 5 to a stop and standstill; that he duly applied the air brakes upon said motor, but, owing to the defective condition of said air brakes, which said condition was wholly unknown to plaintiff, said brakes wholly failed and refused to act, and plaintiff's said train continued to rush forward at a tremendous rate of speed and a collision occurred, plaintiff's said train colliding with said train No. 20, and which said collision caused the injuries hereinafter complained of.

"(6) That said accident and collision was directly due to the wrongful and negligent acts of the plaintiff's said superiors in the giving of said wrongful orders, and in their failure to furnish this plaintiff with a motor and train supplied with proper air brakes in working condition.

"(7) That this plaintiff, after observing said train No. 20 upon the track, had plenty of time to have stopped his said train and prevented said collision if said air brakes had been in good condition and in proper working order."

These allegations were denied, and the defendant for further answer alleges:

"That on said July 31st plaintiff was acting as motorman upon a special train referred to and described in the orders of defendant as motor 5. That under the rules and regulations of such company such special train had no rights over the regular trains operating under the time-table of defendant, and was obliged to keep out of the way of such regular trains; that such special train had no right to go out upon the road when a regular train was due, unless it had telegraphic orders from defendant's train dispatcher in Spokane ordering it to do so; that upon said date plaintiff, in charge as motorman of the special train aforesaid, was standing in defendant's yards at Cœur d'Alene ready to start upon a run to Spokane as soon as there should arrive at Cœur d'Alene one of defendant's regular trains, known on its time-table as No. 20, which was then due; that defendant, knowing that No. 20 was then due, and that he had no right to leave Cœur d'Alene until it had come in, received telegraphic orders from the dispatcher at Spokane to meet another special train at the town of Alan, and that when handing him such orders the conductor of plaintiff's train told him he might run farther down in the yards and wait there until No. 20 came in; that plaintiff started his train under such orders, but instead of stopping at the point in the yards where he had been directed to stop, continued on his way towards Spokane, passing out of the Cœur d'Alene yards and out on the line to Spokane, and at the station of Gibbs, a distance of about 1½ miles from Cœur d'Alene, his train came in collision with No. 20 on a straight track; that No. 20 was in full view of plaintiff's train for a distance of more than 800 feet before the col-

lision occurred, and the motorman of No. 20, seeing plaintiff's train approaching, came to a full stop; that plaintiff could, if he had seen No. 20, have brought his train to a stop within a distance of 150 to 200 feet, and that the collision between the two trains was caused solely and entirely by plaintiff's disobedience of the rules, regulations, and orders of the company, and by his reckless conduct in failing to pay heed to his surroundings, and to keep a lookout upon the track ahead of him so as to observe No. 20 and bring his train to a stop, as he might have done had he have looked ahead of him at all."

The issues thus presented were whether the plaintiff was directed by defendant to proceed with train No. 5, which was special, out of Cœur d'Alene, and to meet regular train No. 20 at the town of Alan; whether the defendant failed to furnish the plaintiff with a motor and train supplied with proper air brakes in working condition; whether plaintiff used due diligence to bring his motor upon train No. 5 to a stop by application of the air brakes upon the motor; and whether, by reason of the defective condition of said air brakes, plaintiff was unable to stop his train in time to prevent collision. And, as presented by the answer, whether, under the rules and regulations of the defendant company in the operation of its train, the plaintiff operating a special was required to keep out of the way of regular trains; whether plaintiff received orders from defendant to meet another special train at Alan, and was directed by the conductor to run farther out in the yards, and there to wait until train No. 20 arrived in; and whether, in disobedience to these orders, he continued on his way, thus bringing on the collision.

[2] A special verdict, where the entire controversy is dependent upon it, should necessarily find all the facts essential to a determination of the issues of the case. In those jurisdictions where both a special and general verdict may be taken, the special verdict will prevail over the general, and this is perhaps the general rule. But this can only be so where the special verdict has been found respecting every material issue; otherwise the court could not be in a position to deduce the conclusions of law necessary to a decision of the case.

[3] It is strongly urged that the federal courts will adopt the local practice with respect to the taking of special and general verdicts and the local rules and procedure for construing the same in determining their potency and effect. It has been distinctly held that the local law with respect to submitting special findings along with a general verdict does not control the federal courts in respect to the mode in which causes shall be submitted to the jury. Indianapolis, etc., R. R. Co. v. Horst, 93 U. S. 291, 23 L. Ed. 898; Mutual Accident Association v. Barry, 131 U. S. 100, 9 Sup. Ct. 755, 33 L. Ed. 60; Toledo, St. L. & W. R. Co. v. Reardon, 159 Fed. 366, 86 C. C. A. 366. This being so, it is a logical consequence that the federal courts will not be bound by the rules obtaining in local courts for interpreting such verdicts. The general rule with respect to this subject is that the court, in determining what judgment shall be entered upon a special verdict, will not look to the evidence nor beyond the pleadings and the judge's record. Mayor, etc., of Borough of Seabright v. New Jersey Cent., 72 N. J. Law, 8, 60 Atl. 64. As said in Daube v. Philadelphia & R. Coal & Iron Co., 77 Fed. 713, 715, 23 C. C. A. 420, 422:

"In determining the force of a special verdict or finding, only the facts found, unmodified by the statements of counsel or by reference to the evidence, can be considered."

The rule covering almost the exact controversy here is very well stated in Conwell v. Tri-City Ry. Co., 135 Iowa, 190, 191 (112 N. W. 546, 547), a code state, as follows:

"On a motion for judgment as against a general verdict based on special findings, every issue raised by the pleadings and not eliminated by the instructions will be presumed to have been found for the party in whose favor the general verdict is returned, and it will be presumed that such findings are supported by sufficient evidence; but the special findings cannot be added to or supported by the evidence, and must be given effect only so far as they necessarily negative the findings which might otherwise be assumed in support of the general verdict."

See, also, Farmers' Sav. Bank v. Forbes, 151 Iowa, 627, 132 N. W. 59; Drake v. Justice Gold Min. Co., 32 Colo. 259, 75 Pac. 912.

[4] With this understanding of the law, we are to determine, without reference to the testimony in the case, whether from the special findings the court is able, as a matter of law, to conclude how the case should be decided, notwithstanding the general verdict. In this relation, we are also to consider the effect of the Employers' Liability Act upon the issues tendered for solution at the trial. This act provides, among other things, that in case of injury or death to an employé, contributing negligence on the part of the employé shall not bar a recovery, but that the damages shall be diminished in proportion to the amount of negligence attributable to such employé, and, further, that no such employé shall be held to have been guilty of contributory negligence in any case where the violation by such common carrier of any statute enacted for the safety of the employés contributed to the injury or death of such employé. 35 Stat. 66. The effect of this statute is to eliminate the element of proximate cause, where concurring acts of the employer and employé contribute as a cause for the injury or death of the employé, especially where the contributing act of the employer was in derogation of a duty imposed under the act for the safety of the employé. This is judicially declared in Grand Trunk Western Ry. Co. v. Lindsay, 201 Fed. 836, 844, 120 C. C. A. 166, 174, where the court said:

"If, under the Employers' Liability Act, plaintiff's negligence, contributing with defendant's negligence to the production of the injury, does not defeat the cause of action, but only lessens the damages, and if the cause of action is established by showing that the injury resulted 'in whole or in part' from defendant's negligence, the statute would be nullified by calling plaintiff's act the proximate cause, and then defeating him, when he could not be defeated by calling his act contributory negligence. For his act was the same act, by whatever name it be called. It is only when plaintiff's act is the sole cause—when defendant's act is no part of the causation—that defendant is free from liability under the act."

To the same effect is Louisville & N. R. Co. v. Wene, 202 Fed. 887, 121 C. C. A. 245.

Now, turning to the special findings, the jury first found that the plaintiff received the train order No. 53. Then they found that the air brakes on plaintiff's train immediately before the collision were in-

sufficient to enable him to control the speed of the train. These findings, construed in the light of the pleadings, show that both the plaintiff and defendant were guilty of negligence, and the acts were concurring, leading to the plaintiff's injury. But this does not relieve the defendant, for, under the liability statute, the defendant acted in derogation of a statute enacted for the safety of the employé. In view of this condition, the holding of the trial court is especially pertinent as follows:

"A collision does not of necessity result from disobedience of orders on the part of an employé, and if the employé who has been guilty of such disobedience is unable to avoid an impending collision because of defective equipment furnished by the master, it surely cannot be said that the defective equipment in no wise contributed to the accident. If it did contribute, a liability exists under the act in question" (the Employers' Liability Act).

The third special finding that the plaintiff's leaving Cœur d'Alene in violation of his orders was the proximate cause of the accident was a mere conclusion of law, and not a finding of fact. The purpose of a special finding is to find the fact, so that the court may deduce the legal conclusions and thus determine the controversy.

Further than this, the jury did not specially find as to all the material issues pertinent to the inquiry under the pleadings.

We think there can be no question that the general verdict should prevail.

[5] As it relates to the motion for a new trial and the action of the trial court respecting the same, it is the established rule in courts of the United States that to grant or refuse a new trial rests in the sound discretion of the court, and the result cannot be made the subject of reversal upon a writ of error. Newcomb v. Wood, 97 U. S. 581, 583, 24 L. Ed. 1085; Copper River & N. W. Ry. Co. v. Reeder, 211 Fed. 280, 127 C. C. A. 648.

The judgment will be affirmed.

(217 Fed. 525)

CHICAGO, ST. P., M. & O. RY. CO. v. KROLOFF.

(Circuit Court of Appeals, Eighth Circuit. October 12, 1914.)

No. 4098.

(Syllabus by the Court.)

1. APPEAL AND ERROR (§§ 1031, 1062*)—PREJUDICIAL ERROR—REFUSAL TO WITHDRAW CHARGE—PRESUMPTION OF PREJUDICE.

A refusal by the court to grant a specific request to withdraw from the jury at the close of the trial one of several charges of negligence on which the plaintiff is seeking to recover is fatal error, if there is no substantial evidence to sustain that charge, although there may be evidence to sustain others, because the presumption is that error produces prejudice, and the appellate court cannot know that it was not upon that baseless charge that the jury founded its verdict.

[Ed. Note.—For other cases, see Appeal and Error, Cent. Dig. §§ 4038–4046, 4212–4218; Dec. Dig. §§ 1031, 1062.*]

*For other cases see same topic & § NUMBER in Dec. & Am. Digs. 1907 to date, & Rep'r Indexes

2. TRIAL (§ 145*)—DIRECTION OF VERDICT—EVIDENCE.

It is the duty of the trial court at the close of the evidence, at the request of counsel, to direct the finding of the jury upon each issue of fact upon which the evidence is undisputed, or so clearly preponderant, or of such a conclusive character that the court would be bound in the exercise of a sound judicial discretion to set aside a contrary finding.

[Ed. Note.—For other cases, see Trial, Cent. Dig. §§ 328, 341; Dec. Dig. § 145.*]

3. RAILROADS (§ 383*)—RAILROAD YARDS—DUTY OF PEDESTRIAN.

"No one, whether passenger, licensee, or trespasser, can frequent or walk over a private railroad yard covered by many tracks employed constantly for a variety of purposes like through travel, switching, breaking up, and making up trains, without scrupulously * * * exercising the utmost * * * vigilance in looking out for approaching engines and trains." Hart v. Northern Pacific Ry. Co., 196 Fed. 180, 185, 116 C. C. A. 12, 17. It is his duty to look and listen. If he cannot see or hear that no engines or cars are approaching, it is his duty to stop until he can. If smoke or steam obscure his vision, or noise his hearing, it is his duty to keep off the track until they so disappear that he can be sure that he will incur no danger by entering upon or crossing it.

[Ed. Note.—For other cases, see Railroads, Cent. Dig. §§ 1305-1310; Dec. Dig. § 383.*]

4. MASTER AND SERVANT (§ 137*)—INJURY TO RAILROAD EMPLOYÉ—RAILROAD YARD—NEGLIGENCE.

It is not a lack of ordinary care for a railroad company to fail, in its private railroad yard in constant and active use, over which its employés have been and are in the habit of crossing to and from their work, not in crowds, but thinly scattered, to place or maintain a man for the purpose of warning employés of its approach, notifying the engineer of their proximity, and turning an angle cock to stop it, upon a switch engine which is working in the yard, with its bell ringing, its headlight burning, and its engineer and fireman watching for the employés and handling the engine as the rule of the company requires them to do.

[Ed. Note.—For other cases, see Master and Servant, Cent. Dig. §§ 269, 270, 273, 274, 277, 278; Dec. Dig. § 137.*]

In Error to the District Court of the United States for the Northern District of Iowa; Henry T. Reed, Judge.

Action by Maurice Kroloff, administrator of the estate of Joseph Brotsky, deceased, against the Chicago, St. Paul, Minneapolis & Omaha Railway Company. Judgment for plaintiff, and defendant brings error. Reversed and remanded for new trial.

George W. Peterson, of St. Paul, Minn. (Sargent, Strong & Struble, of Sioux City, Iowa, on the brief), for plaintiff in error.

Arnold L. Fribourg, of Sioux City, Iowa (Henderson & Fribourg, of Sioux City, Iowa, on the brief), for defendant in error.

Before SANBORN and CARLAND, Circuit Judges.

SANBORN, Circuit Judge. A judgment for $6,000 for alleged negligence causing death is assailed here. The railroad company, the defendant below, complains that the trial court did not withdraw from the jury the charges of the defendant's negligence and that it did not instruct the jury that the evidence conclusively proved that Joseph Brotsky contributed to his own injury. These facts were admitted or conclusively proved: Brotsky was killed by his collision

*For other cases see same topic & § NUMBER in Dec. & Am. Digs. 1907 to date, & Rep'r Indexes

with a switch engine of the defendant, which was backing north on the defendant's north-bound main track in its yards at Sioux City at about 6 a. m., on October 16, 1912. At the place of the accident the track was free from obstructions to the vision, other than smoke and steam from the engines, for more than 1,000 feet to the south. There was a headlight on the north end of the switch engine, which was burning, and the bell of the engine was ringing. The railroad yards of the defendant extend north and south at Sioux City for 2 or 3 miles, and it was in a busy part of these yards, and within 4 or 5 blocks south of its roundhouse, oilhouse, and coal chute that this accident happened. The north-bound main track of the defendant extends through these yards from south of Seventh street to Twenty-Second street. Adjoining this track on the west lies the defendant's south-bound main track, and east of its north-bound main track and nearly parallel to it extends the main track of the Illinois Central Railroad Company. There are public crossings of these tracks at Seventh street, Eleventh street, and Nineteenth street, but none between these streets. The accident occurred between Thirteenth street and Fourteenth street, where there was no public crossing, but many of the employés of the defendant, and among them Mr. Brotsky, who worked for the defendant on the west, and lived on the east, side of these tracks, had been accustomed to cross them near the place of the accident in going to and from their work. Brotsky was going to his work. He was last seen alive walking north in the railroad yard between Eleventh and Fourteenth streets. At the time and place where the accident occurred the hostler was backing an engine down the south-bound main track of the defendant, and with it was pulling another engine. The more southerly engine had its cylinder cocks open and was blowing steam, and it passed the north-bound switch engine at about the time and place of the accident. The only light on the south end of the south-bound engine was a red light in a lantern. It had a headlight shining north. The engineer of the switch engine was on the west side of his engine, with his head and shoulders out the window; the fireman was on the east side of the engine looking north; the hostler, driving the south-bound engine, was on the east side of his engine, watching the tracks to the south of him. They were all watching for pedestrians and obstructions, but none of them saw Mr. Brotsky. After the accident some of his remains and his lunch were found along and near the west rail of the north-bound track at the place where the engines passed each other, and some of them were found on the west front and rear drivers and on the brake rigging of the north-bound engine, but none on the trucks of the tender which preceded it, or on the north footboard, strongly indicating that he collided with the engine on its west side at the time the south-bound engine passed it blowing steam from its cylinder cocks. The crew of the switch or north-bound engine consisted of the engineer, the fireman, the foreman, and two helpers. It was the duty of the engineer and fireman to look out for pedestrians and to use reasonable care to avoid collision with them. There was no evidence that this was the duty of the other three members of the crew, when, as in the case in hand, the engine was making a long movement, a mile or a mile and a half in

length, from one yard or part of a yard to another. Their duties were to turn switches, make couplings, and handle cars, and at the time of the accident these three men were riding on the south footboard.

[1] The charges of negligence which the court submitted to the jury were: (1) Omission to ring the bell; (2) omission to sound the whistle; (3) omission to maintain a sufficient headlight; (4) omission to have the foreman or one of his helpers on the north footboard to look out for and warn pedestrians, and to turn the angle cock and stop the engine. The defendant not only requested the court below to instruct the jury to return a verdict for the defendant on the ground that none of these charges was sustained by substantial evidence, but it made specific requests that the court withdraw each of these charges, and excepted to its refusal of each request, so that, if there was no substantial evidence to sustain any one of these charges, the judgment must be reversed, because, although there was sufficient evidence to sustain other charges, it may be that it was on that very charge that the jury based its verdict. A refusal by the court to grant a specific request to withdraw from the jury one of several specific charges of negligence on which the plaintiff is seeking to recover is fatal error, if there is no substantial evidence to sustain that charge, although there may be evidence to sustain others, because the presumption is that error produces prejudice, and the appellate court cannot know that it was not upon that baseless charge that the jury founded its verdict. Wilmington Mining Co. v. Fulton, 205 U. S. 60, 79, 27 Sup. Ct. 412, 51 L. Ed. 708; Deserant v. Cerillos Coal R. R. Co., 178 U. S. 409, 20 Sup. Ct. 967, 44 L. Ed. 1127; Bank of Havelock v. Western Union Telegraph Co., 141 Fed. 522, 526, 72 C. C. A. 580, 584, 4 L. R. A. (N. S.) 181, 5 Ann. Cas. 515; Armour & Co. v. Russell, 144 Fed. 614, 615, 75 C. C. A. 416, 417, 6 L. R. A. (N. S.) 602; Stevens v. Citizens' Gas & Electric Co., 132 Iowa, 597, 109 N. W. 1090.

[3, 4] It may be well to recall certain incontrovertible physical facts and established rules of law before entering upon the discussion of the evidence. This accident happened as the day was dawning, when it was neither dark night nor bright day. An artificial light in darkness or half darkness is visible at a long distance by one far from it, when one behind or near it can see a dark object by means of its rays but a short distance; and this is as true of a small or low artificial light as of a brilliant one. The light of a lantern as well as that of an automobile may be seen by one miles from it, while those behind or near it can see dark objects by means of its rays but a few feet. Again, an artificial light in steam and smoke illumines the steam and smoke, so that one can see and know that there is a light, when one at or behind the light cannot see through the steam or smoke and distinguish objects much nearer; so that the opportunity of Brotsky to see the headlight, and know it was approaching, was much better than the opportunity of the engineer or fireman to see him. It was the duty of the engineer and fireman to use reasonable care to see and to prevent injury to pedestrians that might be in the yards of the company, in the light of their knowledge that the workmen were accustomed to

pass through them to and from their labor. But it was not their duty to insure their safety, or in case the steam or smoke became so dense that they could not see whether or not there was any one on or near the track to stop their engine, or to go or send forward to ascertain the fact. The yard was the private property of the railroad company, and it had the right to operate it with reasonable care. On the other hand, the exercise of a greater vigilance to watch for and protect himself is the duty of one who enters or crosses the private yard of a railroad company, which has the right of way over and through it for its powerful locomotives and heavy trains. As Judge Adams said in Hart v. Northern Pacific Ry. Co., 196 Fed. 180, 185, 116 C. C. A. 12, 17, these are among propositions of well established law:

"(a) That a railroad track in active use is per se a warning of danger, and that any one is thereby admonished that a train is liable to pass over it any time. (b) That no one, whether passenger, licensee, or trespasser, can approach a railroad track so near as to be hit by a passing train without first both looking and listening to ascertain whether a train is approaching which might injure him. And a fortiori (c) that no one, whether passenger, licensee, or trespasser, can frequent or walk over a private railroad yard covered by many tracks, employed constantly for a variety of purposes, like through travel, switching, breaking up and making up trains, without scrupulously observing the precaution just alluded to, and otherwise exercising the utmost degree of vigilance in looking out for approaching engines and trains. Kansas City, Ft. S. & M. R. Co. v. Cook, 66 Fed. 115, 13 C. C. A. 364 [28 L. R. A. 181]; Garlich v. Northern Pacific Ry. Co., 131 Fed. 837, 67 C. C. A. 237; Chicago, Rock Island & Pac. Ry. Co. v. Baldwin, 164 Fed. 826, 90 C. C. A. 630. Great is his peril, and proportionately great should be his effort to protect himself therefrom. Patton v. Texas & Pacific Ry. Co., 179 U. S. 658 [21 Sup. Ct. 275, 45 L. Ed. 361]."

If at the time Mr. Brotsky approached the track his vision was obscured by steam or smoke, or his hearing by the noise of the southbound engines, so that he could not see or hear whether or not an engine was approaching from the south, it was his duty to keep off the track until the steam, smoke, and noise, which were but temporary, disappeared, so that he could be sure none was coming upon him. Chicago & Northwestern Ry. Co. v. Andrews, 130 Fed. 65, 73, 64 C. C. A. 399, and cases there cited. Thus it appears that the primary and greater duty was on the deceased to watch for the danger and protect himself against it, and not on the railway company; and the law is indisputable that if his failure to discharge that duty contributed to his injury the administrator of his estate cannot recover.

[2] And it was the duty of the trial court at the close of the evidence, at the request of counsel, to direct the finding by the jury upon each issue of fact upon which the evidence was undisputed, or so clearly preponderant, or of such a conclusive character, that the court would be bound, in the exercise of a sound judicial discretion, to set aside a contrary finding. Canadian Northern Ry. Co. v. Senske, 201 Fed. 637, 644, 120 C. C. A. 65, 72; Southern Pacific Co. v. Pool, 160 U. S. 438, 440, 16 Sup. Ct. 338, 40 L. Ed. 485; Union Pacific R. R. Co. v. McDonald, 152 U. S. 262, 283, 14 Sup. Ct. 619, 38 L. Ed. 434; Delaware, Lackawanna & Western R. R. Co. v. Converse, 139 U. S. 469, 11 Sup. Ct. 569, 35 L. Ed. 213.

Let us now examine the testimony in the light of these facts and rules of law. Kohen, a workman, testified that he met Brotsky in the yard on the morning of the accident at or near Eleventh street and saw the north-bound engine, that he was near enough to hear the bell if it was ringing, that if it was ringing he did not hear it, and that he did not remember whether it was ringing or not. Monroe, the fireman, testified that he rang the bell when he went north over Eleventh street, that he thought he continued to ring it all the time until he passed Fourteenth street, that he put in a fire before he reached Eleventh street, and, after he crossed it, he put on the injector, that when he was putting in two or three scoops of coal the bell would not ring, that the bell would not stop more than an instant at a time any way. Donaldson, one of the switchmen on the south end of the switch engine, a witness for the plaintiff, testified that the bell was ringing at Eleventh street, and that he did not remember whether or not it was ringing north of that point. Brannaman, the engineer on the switch engine, testified that the bell was ringing at and north of Eleventh street. Schroeder, the foreman, who was on the south footboard of the switch engine, testified that the bell was ringing; and Mummert, the hostler, who was sitting in the cab on the east side of the south-bound engine as it passed the switch engine, testified that its bell was ringing and that he saw it moving. This was all the material evidence on this subject. The legal presumption was that the fireman did his duty and rang the bell. The testimony of two witnesses, who had no duty regarding the ringing and no occasion to note it, that they did not remember whether it was ringing or not, furnishes no substantial evidence to sustain a finding that it was not rung, in the face of the legal presumption and the positive testimony of four witnesses, whose duties required them to know the fact, that it was rung, and the charge of negligence in failing to ring the bell should have been withdrawn from the jury. There was no substantial evidence to sustain it.

The statutes of Iowa require the whistle to be sounded 60 rods before a road crossing is reached, but provide that the sounding of the whistle may be omitted at street crossings within the limits of cities or towns, unless required by ordinance or resolution of the council thereof. Code Iowa 1897, § 2072. The place of the accident was within the limits of a city, the record contains no proof of any ordinance or resolution, the bell was rung, there was no duty to sound the whistle, and the failure to sound it was not actionable negligence.

The plaintiff alleged that it had long been the practice and custom of the defendant, in moving its switch engines in its yards and over the place where it struck Mr. Brotsky, to place a man or men on the approaching end of such engines to keep a lookout for and to warn him and other employés of the approach of such engines, and to warn those operating such engines of the proximity of persons on the tracks, and that the defendant failed to do so. No witness came to say that there had ever been any custom or practice to place a man or men on the approaching end of the switch engines at the place of the accident, or elsewhere in the yards, to keep a lookout for and warn em-

ployés of the approach of the engines, or to notify engineers of the proximity of persons in the yards. On the other hand, there was positive and uncontradicted testimony that there was no such custom. The evidence, in the most favorable view of it for the plaintiff, went no farther than to tend to show that the foreman and the two switchmen, when actively engaged in turning switches and handling cars during short movements, ordinarily rode on the footboard of the engine, from which it was most convenient for them to do their work, whether this was the footboard on the advancing or on the retreating end of the engine, that they had often ridden on the footboard of the advancing end at the place of the accident, that either footboard was a proper place for them, but that in long movements—and the movement the engine was making at the time of the accident was a long movement—they usually rode on the retreating end of the engine. There was also evidence that there was an angle cock within reach of a man on the north footboard of the engine and tender, by turning which the air could be so manipulated as to stop the engine, and the plaintiff insisted that it was negligence not to have a man on that footboard to turn this angle cock.

But the limit of the plaintiff's duty was to exercise ordinary care in moving its switch engine through its yards, and the burden was on the plaintiff to prove that it failed to use that degree of care. The best test of ordinary care is that care that ordinarily prudent and careful railroad operators commonly use under similar circumstances, and in the absence of evidence of that care it is such care as ordinarily prudent and careful persons would use under like circumstances. Moreover, the legal presumption is, in the absence of countervailing evidence, or of indisputable negligence, that the degree of care the defendant exercised was such as a prudent and careful person would exercise under like circumstances. No witness came to say that prudent railroad companies ordinarily placed a man on the advancing ends of their switch engines to look out for and warn pedestrians passing through their yards under such circumstances as this case discloses, or that prudent operators would do so. There was no testimony that prudent operators would, or that operators ever had, in like circumstances, placed a man on the approaching end of a switch engine to turn the angle cock and stop the engine, or to notify the engineer of the proximity of persons on the track. And the failure to do these things certainly was not clear or indisputable negligence. The employés who passed through the yard at the place of the accident did not come in crowds, but thinly scattered, and the primary duty was on them to protect themselves. The evidence on this question goes no farther than to tend to show that a man on the approaching end of the footboard could have seen a pedestrian on the tracks better than the engineer, and could by turning the angle cock have stopped the engine quicker, and this evidence was squarely contradicted. Admitting it to be true, however, it only proves that there was an extraordinary and unusual degree of care, that the company could have exercised, which might have prevented the accident. There is no proof, and no evidence from which a lawful inference may be deduced, that the

placing of a man on the footboard of the approaching engine, under the circumstances of this case, to warn employés of its approach, to notify the engineer of its presence, or to turn the angle cock, fell within the limits of ordinary care. The testimony was that the purpose and use of the angle cock was to open the air to the car behind the engine when one was there, and again to shut it off. There was no evidence that it was placed there to stop the engine, or that it was ever used for that purpose, although it could be used to effect that result.

The rule of the company placed the duty of looking out for pedestrians, warning them, and stopping and handling the engine, on the engineer and the fireman, and imposed no duty of that kind on the foremen or switchmen, during such a movement as resulted in this accident. The engineer, the fireman, and other witnesses testified that the engineer and fireman faithfully discharged their duty, and there was no witness to the contrary. The bell was rung; the headlight was burning. This watchfulness and these warnings constituted the exercise of ordinary care, and there was no substantial evidence that the failure to keep a man on the footboard of the approaching engine to look out for pedestrians, to warn them, to signal the engineer of their presence, or to stop the engine, constituted any failure of that degree of care, and for that reason these charges should have been withdrawn from the jury.

It was alleged and denied that the headlight was burning low, and that the failure to maintain a more brilliant light was negligence, which caused the accident; and it is specified as error that this issue was submitted to the jury. Donaldson, the switchman called by the plaintiff, testified that the atmosphere was steamy; that in the condition at the time of the accident the headlight of the north-bound engine would light 12 or 15 feet ahead of the tender, but that it could be seen farther by a man on the track; that the headlights were low; and as follows: "Q. What do you mean by that Mr. Donaldson? A. Well, the oil generally burns low at that time, and the wicks are short, as a general rule;" and on cross-examination that during the course of the night the oil in the headlight would be consumed to some extent, that he did not know the amount of oil in the lamp of the headlight at the time of the accident, nor the amount in it when it was lighted the evening before, that his duties as switchman did not require him to inspect the light or give any attention to it, that he did not at the time of the accident, or within a few minutes after, inspect the headlight, and that he was not able to state of his own knowledge its condition at the time of the accident. The only effect of this testimony was that headlights generally consume oil during the night and burn low in the morning; but he did not know the condition of the headlight in question at the time of the accident, and this testimony may be laid aside as immaterial, and yet it was all the evidence that the headlight was not maintained with ordinary care. On the other hand, Enochsen testified that the object of a headlight on the tender was as a monitor for the men working in the yards, that as ordinarily burning it would light track 60 feet, that the engineer could see farther with a high light than with a low light, but that the latter would be visible to one in the yards about as far as the former. Brannaman, the engineer, who used and

was interested in the light, testified that it was particularly good, but that it would not penetrate steam. Monroe, the fireman, testified that he always took particular pains with the headlights on this engine, and that there was no better headlight in the yards than the one on its tender. Schroeder, the foreman, testified that he noticed the headlight after the accident, and it was burning good; and Mummert, the hostler, testified that when he was at the oilhouse, which is several hundred feet north of the place of the accident, and the switch engine was at or below Eleventh street, he saw this headlight as the engine was coming north. There was no substantial evidence here that the defendant was guilty of any lack of ordinary care in the maintenance of this headlight, and the jury should have been instructed to return a verdict for the defendant.

Let the judgment be reversed, and the case be remanded to the court below, with instructions to grant a new trial.

(217 Fed. 533)

WESTERN UNION TELEGRAPH CO. et al. v. POSTAL TELEGRAPH CO.

(Circuit Court of Appeals, Ninth Circuit. October 5, 1914.)

No. 2399.

1. CONTRACTS (§ 116*)—COMBINATIONS PROHIBITED—CONTRACT GRANTING EXCLUSIVE USE OF RIGHT OF WAY TO TELEGRAPH COMPANY—VALIDITY.

A contract by a railroad company, giving a telegraph company the exclusive right to maintain a telegraph line upon its right of way, is contrary to public policy and void.

[Ed. Note.—For other cases, see Contracts, Cent. Dig. §§ 542–552; Dec. Dig. § 116.*]

2. INJUNCTION (§ 5*)—NATURE AND FORM OF REMEDY—MANDATORY INJUNCTION.

An "injunction" is a writ framed according to the circumstances of the case, and a court of equity is not always limited to the restraint of a contemplated or threatened action, but may require affirmative action, where the circumstances of the case demand it.

[Ed. Note.—For other cases, see Injunction, Cent. Dig. § 4; Dec. Dig. § 5.*

For other definitions, see Words and Phrases, First and Second Series, Injunction.]

3. INJUNCTION (§ 57*)—NATURE AND FORM OF REMEDY—MANDATORY INJUNCTION.

Where a railroad company and a telegraph company had agreed on a contract giving the latter the right to construct and maintain its line on the railroad company's right of way, and its execution was prevented only by the objection of another telegraph company, which claimed exclusive use of the right of way under an illegal contract, it was within the power of a court of equity to require the execution of such contract by a mandatory injunction.

[Ed. Note.—For other cases, see Injunction, Cent. Dig. §§ 111–113, 130; Dec. Dig. § 57.*]

Appeal from the District Court of the United States for the District of Oregon; Chas. E. Wolverton, Judge.

---

*For other cases see same topic & § NUMBER in Dec. & Am. Digs. 1907 to date, & Rep'r Indexes

Suit in equity by the Postal Telegraph Company against the Western Union Telegraph Company and the Southern Pacific Company. Decree for complainant, and defendants appeal. Affirmed.

The case is fairly stated by counsel for the appellants. The original bill was filed August 25, 1911, and alleged, among other things, that the defendant Southern Pacific Company owns a leasehold interest in the railroad right of way of the Oregon & California Railroad Company from Eugene, in Lane county, Or., to New Era, in Clackamas county, a distance of 103 miles, upon part of which right of way the complainant maintains its telegraph line; that the Pacific Postal Telegraph-Cable Company, the predecessor in interest of the complainant, and which corporation had fully accepted the provisions of the Post Roads Act of Congress (Act July 24, 1866, c. 230, 14 Stat. 221 [Comp. St. 1913, § 10072]), constructed a telegraph line along said right of way more than 24 years prior to the commencement of the suit; that between New Era and Eugene the greater number of poles of the said telegraph line are not upon the railroad right of way, but upon adjoining land, and in some places where the poles are upon land adjoining the cross-arms and wires overhang the railroad right of way; that the complainant's predecessor in interest, the Pacific Postal Telegraph-Cable Company, erected the said poles and strung the wires thereon without permission or license from the Southern Pacific Company or the Oregon & California Railroad Company, and for more than 24 years maintained open, notorious, peaceable, adverse, continuous, and uninterrupted possession thereof; that the defendant Southern Pacific Company leased the said right of way from the Oregon & California Railroad Company, subject to the rights of the complainant and the burden of its telegraph line upon the said right of way; that the Oregon & California Railroad Company was one of the land grant railroad companies; that the complainant's telegraph line does not interfere with the operation of the railroad, and that the part of the right of way occupied by the complainant is not needed for railroad purposes, and that the complainant will not attach its wires or fixtures to the defendant Southern Pacific Company's bridges, trestles, buildings, or structures; that the complainant has accepted the provisions of the act of Congress of July 24, 1866, authorizing it to construct its line of telegraph over and along the military and post roads of the United States, and therefore has the right to maintain its telegraph line on the right of way of the defendant railroad company; that owing to the wear and tear of the elements, and in order to properly handle the business intrusted to the complainant by the public and the United States government, it is imperative that the complainant's telegraph line be at once repaired and reconstructed; that although the defendant railroad company's assistant general manager has informed the complainant's agent that it would prevent complainant, by force and violence, if need be, from repairing and reconstructing the said telegraph line, nevertheless the complainant, on or about July 25, 1911, commenced the repairing and reconstructing of the said line in a careful manner, and so as not to interfere with the operation of the railroad, planting new poles in identically the same portions of ground occupied by the old and worn poles, but that the defendant, on July 28, 1911, sawed off 90 of the new cross-arms and greatly damaged complainant's lines, and threatens to prevent any further repairing or reconstruction of its said line, with force and violence—the prayer of the bill being for an injunction restraining the defendant railroad from interfering with the repair, reconstruction, and maintenance of the complainant's telegraph lines on the railroad right of way between New Era and Eugene.

The defendant railroad company by its answer denied the alleged open, notorious, peaceable, adverse, continuous, and uninterrupted possession by the complainant of its telegraph line, and denied that the latter does not interfere with the operation of the defendant's railroad. As an affirmative defense the railroad company alleged that in November, 1886, while its predecessor, the Oregon & California Railroad Company, was in the hands of a receiver of the United States Circuit Court, the Pacific Postal Telegraph-Cable Company, the complainant's predecessor in interest, presented a petition to that court asking that it be allowed to place its poles, cross-arms, and wires upon the right of way of the said railroad, upon condition that it should allow

the same to remain upon said railroad right of way for such time as the receiver should be in possession of the said road, and that an order was made by the court granting the prayer of that petition on the 18th day of September, 1886, copies of which petition and order are set forth in the answer; that such occupancy as the complainant and its predecessor have and have had on said right of way was taken under the permission so granted, and that at the close of the receivership the poles and overhanging cross-arms of the complainant's predecessor were allowed to remain by permission and sufferance of the defendant railroad company on the right of way between New Era and Eugene; that in the five years then last past the use of the entire right of way of the defendant railroad company for railroad purposes has become necessary, particularly on account of the installation of a block signal system, and for that reason it has become necessary to revoke the permission granted to complainant's predecessor.

For a second affirmative defense the defendant railroad set up the proceedings in a suit commenced in the year 1907 by the Pacific Postal Telegraph-Cable Company against the Oregon & California Railroad Company and the Southern Pacific Company, its tenant, for the purpose of appropriating the right of way of those companies from the city of Portland, Or., to the state line between the states of California and Oregon, for a telegraph line to be constructed and maintained by the complainant, the complaint in that suit alleging that the damages to be sustained by the defendants by reason of such appropriation would be $2,100, but on a trial being had the jury assessed such damages at $66,000, which sum the telegraph company refused to pay; and it is alleged as a part of the second affirmative defense set up in the answer in the present suit that the judgment in that suit constituted an adjudication of all the matters and things at issue in the case at bar.

The case being at issue, the taking of testimony was commenced, pending which negotiations were entered into by the respective parties looking to an amicable settlement of their differences, to which end a contract was prepared on behalf of the Southern Pacific Company and submitted to the Postal Company, which latter company suggested certain modifications, resulting in an agreement between the two companies. The contract, however, was never signed, because of the fact that the defendant Western Union Telegraph Company declined to give its assent to the execution thereof by the Southern Pacific Company, and subsequently the Western Union Company took over the defense of the suit. Thereupon the complainant filed a supplemental bill, in which were recited the facts of the filing of the original bill and answer thereto and the unsuccessful attempt of the complainant and the Southern Pacific Company to adjust their differences, annexing to the supplemental bill a copy of the said alleged agreement unexecuted.

The supplemental bill alleged the existence of a contract between the Southern Pacific Company and the Western Union Telegraph Company, by the terms of which the latter company claimed the right to prevent the settlement of this suit, a copy of which the complainant has been unable to obtain, and alleged, upon its information and belief, that the same is in violation of a certain act of Congress of August 7, 1888 (25 Stat. 382, c. 772 [Comp. St. 1913, § 10080]). The supplemental bill further alleged that, in addition to owning and maintaining a telegraph line between Eugene and New Era, in Oregon, the complainant had also for more than 20 years maintained a telegraph line along the railroad company's right of way between Portland and Myrtle Creek, and between Myrtle Creek and Ashland, in that state, and that the right to maintain all of this was included in the negotiations referred to, and by its prayer the complainant asked that the Western Union Telegraph Company be required to set forth its contract with the Southern Pacific Company, and that the contract between the complainant and the said Southern Pacific Company be made the basis of a decree to be entered, adjudicating the rights of all of the parties to the suit.

Both the Southern Pacific Company and the Western Union Telegraph Company demurred to the supplemental bill, which demurrer being overruled, the Western Union Telegraph Company filed an answer thereto, in which, among other things, it admitted that there is a contract between the Southern Pacific Company, and the Western Union Telegraph Company by and through which

the Western Union Company "claims certain rights and privileges regarding the use of the right of way of the railway of the Southern Pacific Company in the supplemental bill set forth, but denies that this defendant claims the right to prevent the settlement of this action, except so far as any proposed settlement may injuriously affect any rights of this defendant; that it claims the right to object to or prevent such or any settlement as will or may involve or interfere with or injuriously affect its own rights. To any other settlement made between the Southern Pacific Company and the complainant this defendant claims no right to object, unless its approval of such proposed settlement is made a condition upon which the Southern Pacific Company undertakes to execute such agreement, in which case this defendant claims that it may withhold its assent and thereby prevent the execution of said agreement, whether this defendant has any interest in or is to be affected by such agreement or not," and further that the proposed agreement was laid before the defendant Western Union Telegraph Company by the Southern Pacific Company for its consideration, and that the Western Union Telegraph Company exercising its option in the premises, declined to approve the proposed agreement, and took over the defense of the present suit.

As an affirmative defense the Western Union Telegraph Company set up the making of an agreement on the 1st day of April, 1871, between it and the Oregon & California Railroad Company, under the terms of which it agreed to construct, maintain, and operate the telegraph line required by Act Cong. July 25, 1866, c. 242, 14 Stat. 239, and the construction and maintenance of such telegraph line pursuant to the terms of that agreement are alleged; that on October 1, 1901, the Southern Pacific Company, lessee of the Oregon & California Railroad Company, and the Western Union Telegraph Company, entered into an agreement which is set up in the answer, and which is the agreement sought to be disclosed by the supplemental bill, and under which it is alleged the Western Union Telegraph Company has continued to hold possession of the said right of way for telegraph purposes and has performed all of the requirements of the act of Congress of July 25, 1866, and met all demands of the railroad and of the United States. That contract provides for the ownership, construction, reconstruction, and maintenance of a telegraph line by the Western Union Telegraph Company along the right of way of the Southern Pacific Company, for a stated compensation to be paid by the Western Union Company, and other considerations, and, among various other matters, contains this clause:

"Section 9. Exclusive Right of Way. The Pacific Company, so far as it legally may, hereby grants and assures to the Telegraph Company the exclusive right of way along and under the lines and lands and bridges of the railroads, and any branches or extensions thereof covered by this agreement, for the construction, maintenance, and operation of lines of poles and wires and underground or other lines for commercial or public telegraph and public telephone uses or business, with the right to construct, at the Telegraph Company's own cost and expense, from time to time, such additional wires and lines of poles and wires as the Telegraph Company may require; the lines to be located on the railroad right of way, lands, and bridges in such manner as the Pacific Company may designate. The Pacific Company agrees to clear and keep clear said right of way of all trees, undergrowth, and other obstructions which may interfere with the construction and maintenance of the lines and wires provided for hereunder: Provided always that, in protecting and defending the exclusive grant referred to in the foregoing paragraph hereof, the Telegraph Company may use and proceed in the name of the Pacific Company, or of any other companies owning the railroads in respect to which this contract is made, but shall indemnify and save it and them harmless from any and all damages, costs, charges, and legal expenses incurred therein or thereby. And the Telegraph Company covenants and agrees to satisfy and comply with any and all judgments or decrees which may be obtained against the Railroad Company in respect to any of the matters in this section mentioned."

The complainant having filed its replication, further testimony was taken, and, the cause being concluded and submitted to the court, a decree was entered, by the terms of which the contract between the Western Union Tele-

graph Company and the Southern Pacific Company above referred to, "in so far as the said Western Union Telegraph Company is by said contract granted the exclusive right and privilege of occupying the right of way of the Southern Pacific Company for maintaining telegraph lines," is declared to be contrary to public policy, void, and of no effect, and further decreeing that the Southern Pacific Company is "authorized, permitted, directed, and commanded to conclude that certain agreement with the complainant, Postal Telegraph Company, mentioned in the pleadings in this case, which is in words and figures as follows, to wit," setting forth the written agreement, and enjoining the Western Union Telegraph Company, its officers, servants, agents, employés, and counsel, from interfering with the execution of the said contract.

The assignments of error are in effect that the trial court erred in overruling the demurrer of the Western Union Telegraph Company to the supplemental bill, in declaring that the contract between the Western Union Telegraph Company and the Southern Pacific Company, mentioned in the supplemental bill and set out in the answer thereto of the Western Union Telegraph Company, "in so far as the Western Union Telegraph Company is by said contract granted the exclusive right and privilege of occupying the right of way of the Southern Pacific Company for maintaining telegraph lines, is contrary to public policy, nugatory, and void, and of no effect whatever," in "authorizing, permitting, directing, and commanding the defendant Southern Pacific Company to conclude that certain agreement with the complainant Postal Telegraph Company, attached to and made a part of the supplemental complaint," in enjoining the Western Union Telegraph Company from interfering with the execution of that contract, in not dismissing the supplemental bill on the ground that the court was without jurisdiction to compel the Western Union Telegraph Company to give its assent to the execution of the contract between complainant and the Southern Pacific Company, and on the ground that the Southern Pacific Company had the right to make the execution of its agreement with the Postal Telegraph Company dependent upon the assent thereto of the Western Union Telegraph Company, and in not adjudging that the Southern Pacific Company had the right to make the execution of its contract with the Postal Telegraph Company dependent upon the assent thereto of the Western Union Telegraph Company, and, such assent being shown to have been withheld, in not dismissing the supplemental bill.

W. D. Fenton, James E. Fenton, Ben C. Dey, and Kenneth L. Fenton, all of Portland, Or., for appellant Southern Pacific Co.

Dolph, Mallory, Simon & Gearin and Hall S. Lusk, all of Portland, Or., for appellant Western Union Tel. Co.

F. V. Holman and A. A. Hampson, both of Portland, Or., for appellee.

Before GILBERT, ROSS, and MORROW, Circuit Judges.

ROSS, Circuit Judge (after stating the facts as above). [1] We are of the opinion that the court below was clearly right in holding the attempted grant by the Southern Pacific Company to the Western Union Telegraph Company of the exclusive right for the construction, maintenance, and operation of a telegraph line upon the railroad company's right of way void and of no effect. A similar question came before the Circuit Court for the Southern District of California in 1894, in the cases of Mercantile Trust Co. v. Atlantic & Pacific Railroad Co. (C. C.) 63 Fed. 513, and Mercantile Trust Co. v. Atlantic & Pacific Railroad Co. (C. C.) 63 Fed. 910. The railroad company there undertaking to make a like exclusive grant to the Western Union Telegraph Company was created under the act of Congress of July 27, 1866, entitled "An act granting lands to aid in the construction of a railroad

and telegraph line from the states of Missouri and Arkansas to the Pacific coast" (14 Stat. 292, c. 276), and in addition to contending that the attempted exclusive grant was valid, the Western Union Telegraph Company further contended that the Atlantic & Pacific Railroad Company could lawfully withhold from the Postal Telegraph Company all facilities for the transportation of its poles, wires, etc. In disposing of those contentions the writer there said, among other things:

"The Atlantic & Pacific Railroad Company was thus created, and made a great highway of communication, with the declared object of promoting the public interest and welfare. There is not a syllable in the act indicating that it was intended by Congress to be used as an instrument for the building up or fostering of any monopoly of any character, or that it should be permitted to do any act inconsistent with the objects for which it was created. If it may lawfully withhold facilities for the transportation of material and supplies for the erection of a line or lines of telegraph which may come into competition with some other line, no reason is perceived why it may not also withhold facilities for the transportation of any other kind of freight in the interest of some one or more favored persons or corporations. The Atlantic & Pacific Railroad Company is a common carrier, and common carriage must be kept open to all alike, under like circumstances and conditions. What the considerations were that induced the Atlantic & Pacific Company to make the stipulation in question is immaterial. Its purpose plainly was to prevent competition. In the present age of progress the telegraph is as essential to the needs and comforts of the public as the railroads themselves. 'Telegraphs,' said Mr. Wharton in a note to the case of W. U. Telegraph Co. v. Burlington & S. Ry. Co. [C. C.] 11 Fed. 12, 'are now essential to business, and as such are to be kept open to competition (unless the Legislature should otherwise determine), in the same way that common carriage is to be kept open to competition. An agreement to give a particular line of carriers monopoly in a state would not (without legislative aid) be enforced, nor should a contract to give a monopoly to a particular telegraph company.' The Atlantic & Pacific Railroad Company, being a common carrier, is bound to afford every telegraph company, as well as every other company or person, equal transportation facilities under like circumstances and conditions; and its agreement to withhold from any other company or person than the Western Union Telegraph Company such facilities is, in my opinion, at variance with the declared purposes for which that company was created, against public policy, in restraint of trade, and void."

To the same effect are Pensacola Telegraph Co. v. Western Union Telegraph Co., 96 U. S. 1, 24 L. Ed. 708, and United States v. Union Pacific Railroad Co., 160 U. S. 1, 16 Sup. Ct. 190, 40 L. Ed. 319.

The attempted exclusive grant to the Western Union Company by the Southern Pacific Company of the right of way in question for telegraph purposes being void, it was and is no legitimate concern of the former how many similar rights the Southern Pacific Company should grant to others, so long as the Western Union Company's right to the existence and maintenance of its own line is unaffected. In the absence of a valid exclusive grant to that company, there is nothing in the record tending to show that its line was or could be in any way affected by the agreement made between the Southern Pacific Railroad Company and the Postal Telegraph Company, with which agreement the Western Union Company therefore had nothing whatever to do.

[2, 3] The willingness of the Southern Pacific Company, but for the objections interposed by the Western Union Telegraph Company, to execute in writing the agreement made between it and the Postal Tele-

graph Company, sufficiently appears from the record, and we are of the opinion that the court below was not in error in decreeing that the defendant railroad company execute the contract. Jeremy, in his Equity Jurisdiction, says:

"An injunction is a writ framed *according to the circumstances of the case, commanding* an act which the court regards as essential to justice, or *restraining* an act which it considers contrary to equity and good conscience."

The purpose of the case of In re Lennon, 166 U. S. 548, 17 Sup. Ct. 658, 41 L. Ed. 1110, was to compel certain railroad companies to afford reasonable and equal facilities for the interchange of traffic, where it was alleged that they and their employés—

"had given out and threatened that they would refuse to receive from complainant cars billed over its road for transportation by complainant to their destination, for the reason that the complainant had employed as locomotive engineers in its service men who were not members of the Brotherhood of Locomotive Engineers, 'an irresponsible voluntary association,' and that the locomotive engineers in the employ of the defendant companies had refused to handle cars to be interchanged with the complainant's road, notwithstanding that they continued to afford the other railroad companies full and free facilities for the interchange of traffic, while refusing to transact such business with the complainant, thereby illegally discriminating against it."

In the course of its opinion the Supreme Court said, among other things:

"Perhaps, to a certain extent, the injunction may be termed mandatory, although its object was to continue the existing state of things, and to prevent an arbitrary breaking off of the current business connections between the roads. But it was clearly not beyond the power of a court of equity, which is not always limited to the restraint of a contemplated or threatened action, but may even require affirmative action, where the circumstances of the case demand it. Robinson v. Lord Byron, 1 Bro. C. C. 588; Hervey v. Smith, 1 Kay & Johns. 389; Beadel v. Perry, L. R. 3 Eq. 465; Whitecar v. Michenor, 37 N. J. Eq. 6; Broome v. New York & New Jersey Telephone Co., 42 N. J. Eq. 141 [7 Atl. 851]."

In the case of Pokegama Sugar-Pine Lumber Co. v. Klamath River Lumber & Improvement Co. (C. C.) 86 Fed. 528, Judge Morrow held, among other things, that where sufficient grounds exist a court of equity has the power to and will issue, on a preliminary examination, a restraining order, though mandatory in effect and requiring affirmative action, saying, among other things, at page 533:

"It is contended that the injunction, although preventive in form, was mandatory in effect; its execution resulting in a change in the status of the parties. This contention assumes that the court will recognize the respondent as asserting, at the time the bill was filed, a claim of possession to the property under a color of right to such possession, and that the effect of the order was to oust it from that possession. But equity will not permit a mere form to conceal the real position and substantial rights of parties. Equity always attempts to get at the substance of things, and to ascertain, uphold, and enforce rights and duties which spring from the real relations of parties. It will never suffer the mere appearance and external form to conceal the true purposes, objects, and consequences of a transaction. Pom. Eq. Jur. (2d Ed.) § 378."

The judgment is affirmed.

(217 Fed. 540)

UNION PAC. R. CO. v. BOARD OF COM'RS OF WELD COUNTY, COLO., et al.†

(Circuit Court of Appeals, Eighth Circuit. October 12, 1914.)

No. 4136.

1. TAXATION (§ 535*)—REFUND OF ILLEGAL TAX—CONSTRUCTION OF STATUTE—"FOUND TO BE ERRONEOUS OR ILLEGAL."

Rev. St. Colo. § 5750, which provides that, "in all cases where any person shall pay any tax * * * that shall thereafter be 'found to be erroneous or illegal,' * * * the board of county commissioners shall refund the same without abatement or discount to the taxpayer," relates to a finding by a court in a judicial proceeding, and not to any action of administrative boards, and is not repealed or affected by Laws Colo. 1913, p. 528, § 5, providing that no abatement, rebate, or refund of taxes shall be allowed by the county commissioners until their recommendation therefor shall be submitted to and approved by the state tax commission, which statute relates only to action taken by the commissioners in their administrative capacity.

[Ed. Note.—For other cases, see Taxation, Cent. Dig. §§ 991–995, 1012, 1015; Dec. Dig. § 535.*]

2. TAXATION (§ 545*)—CONSTRUCTION OF STATUTES—PROSPECTIVE OPERATION OF REPEALING STATUTES.

As a rule statutes relating to taxation should be given a prospective operation only, and unless otherwise expressly provided statutes in force at the time a tax is levied continue in force for its collection, notwithstanding their amendment or repeal.

[Ed. Note.—For other cases, see Taxation, Cent. Dig. § 1018; Dec. Dig. § 545.*]

3. TAXATION (§ 608*)—REMEDY FOR WRONGFUL ENFORCEMENT OF TAX—EQUITY JURISDICTION—ADEQUATE REMEDY AT LAW.

Rev. St. Colo. § 5750, giving an action at law against the county for the recovery of sums paid on account of invalid taxes, provides a plain, speedy, and adequate remedy, which in general excludes the jurisdiction of equity to enjoin collection of a tax.

[Ed. Note.—For other cases, see Taxation, Cent. Dig. §§ 1230–1241; Dec. Dig. § 608.*]

4. TAXATION (§ 608*)—REMEDY FOR WRONGFUL ENFORCEMENT—EQUITY JURISDICTION.

Fraud of taxing officers in the assessment of property is not alone ground of equitable jurisdiction to restrain the collection of the tax, if there is an adequate remedy at law provided by statute.

[Ed. Note.—For other cases, see Taxation, Cent. Dig. §§ 1230–1241; Dec. Dig. § 608.*]

5. TAXATION (§ 608*)—FEDERAL COURTS—EQUITY JURISDICTION—ADEQUATE REMEDY AT LAW.

A federal court of equity, which by Rev. St. § 723 (Comp. St. 1913, § 1244), is denied jurisdiction where complainant has a plain, adequate, and complete remedy at law, is not given jurisdiction by the fact that complainant has without right instituted such a suit and proceeded until the court can give him a more speedy and complete remedy therein than he could obtain by resorting to a new action at law.

[Ed. Note.—For other cases, see Taxation, Cent. Dig. §§ 1230–1241; Dec. Dig. § 608.*]

Appeal from the District Court of the United States for the District of Colorado; Robert E. Lewis, Judge.

*For other cases see same topic & § NUMBER in Dec. & Am. Digs. 1907 to date, & Rep'r Indexes

† Rehearing denied February 12, 1915.

Suit in equity by the Union Pacific Railroad Company against the Board of County Commissioners of the County of Weld, State of Colorado, and others. Decree for defendants, and complainant appeals. Affirmed.

C. C. Dorsey, of Denver, Colo. (N. H. Loomis, of Omaha, Neb., and Gerald Hughes and E. I. Thayer, both of Denver, Colo., on the brief), for appellant.

Charles F. Tew, of Greeley, Colo. (Walter E. Bliss, of Greeley, Colo., on the brief), for appellees.

Before HOOK and SMITH, Circuit Judges, and AMIDON, District Judge.

AMIDON, District Judge. This is a suit by the Union Pacific Railroad Company against the commissioners of Weld county, Colo., and its tax-collecting officers, to restrain the collection of state, county, and municipal taxes levied for the year 1912. The complaint charges, in substance, that the property of the railroad company was assessed at one-third of its actual value, while all other property was assessed at not to exceed one-fifth of its value. It is also charged that some classes of property which should properly have been assessed for purposes of taxation were wholly omitted by the assessors. These discriminations are alleged to have been systematic and deliberate. Application was made to the trial court for a temporary injunction. This was heard upon bill, answer, and affidavits, and a large volume of oral testimony, and was denied. The present appeal is brought to review that order.

[1] The trial court based its decision upon section 5750 of the Revised Statutes of Colorado, which reads as follows:

"In all cases where any person shall pay any tax, interest or costs, or any portion thereof, that shall thereafter be found to be erroneous or illegal, whether the same be owing to erroneous assessment, to improper or irregular levying of the tax, to clerical or other errors or irregularities, the board of county commissioners shall refund the same without abatement or discount to the taxpayer."

Following the decision of the Supreme Court in Singer Sewing Machine Co. v. Benedict, 229 U. S. 481, 33 Sup. Ct. 942, 57 L. Ed. 1288, the trial court held that this statute affords a complete and exclusive remedy for the wrongs here complained of. The appeal raises two questions: (1) Has the statute been repealed as to the tax levy of 1912? (2) If the statute applies to the taxes of 1912, does it afford an adequate remedy?

Plaintiff claims that section 5750 above quoted was repealed by section 5 of chapter 134 of the Session Laws of 1913, which reads as follows:

"No abatement, rebate or refund of taxes shall be allowed by the county commissioners, unless a hearing shall be had thereon and a notice of such hearing and an opportunity to be present being first given to the assessor; and in case any abatement, rebate or refund of taxes shall be recommended by said county commissioners, they shall certify to the Colorado tax commission their findings, giving the amount of such abatement, rebate or refund, and their reasons therefor, and such abatement, rebate or refund, shall be-

come effective upon the indorsement thereon of the approval of the Colorado tax commission; and in case the said Colorado tax commission shall disapprove the recommendations of the county commissioners, they shall indorse their disapproval thereon and return it to the county commissioners with a statement of their reasons therefor, and no abatement, rebate or refund of taxes shall be allowed by the said board of county commissioners if the application is disapproved by the said Colorado tax commission."

In our judgment this statute has nothing to do with the subject embraced in section 5750. It is confined wholly to the administrative functions of county commissioners. By numerous statutes of Colorado, those bodies are vested with power to revise tax proceedings, and, if assessments or taxes are found to be illegal, to abate or refund the same. See sections 5691 and 5641 of the Revised Statutes; section 13, subdivisions 1, 5, and 7, and section 14 of chapter 216 of the Session Laws of 1911. It is also probable that county commissioners, by virtue of their general control over the fiscal affairs of counties, would be vested with power to abate or refund taxes found by them to be illegal. There are numerous provisions in the statutes of the state which give color to such an authority. Section 5 of chapter 134 of the Laws of 1913, above quoted, is intended to place this power of county commissioners under the supervision of the Colorado tax commission. It simply forbids county commissioners to abate or refund taxes as the result of their own investigation and judgment without the consent of the state commission. It is not intended to take away their duty to pay any judgment recovered in court against the county under section 5750. The right created by that section is not dependent upon any action of county commissioners or other taxing agencies. It is quite plain that such bodies, exercising their administrative power to relieve against erroneous or illegal taxes, would, if they found any tax to be erroneous or illegal, grant relief themselves, and in such a case there would be no occasion to resort to the courts under section 5750. The phrase in that section, "shall thereafter be found to be erroneous or illegal," relates to a finding by a court in a judicial proceeding, and not to the action of administrative boards. To be sure, a taxpayer feeling aggrieved by the assessment of his property, or the levying of a tax, would be bound to seek redress by application to administrative boards clothed with power to grant him relief, before resorting to the courts; but the door to the court is not confined to an appeal from such administrative bodies. Any taxpayer aggrieved by taxing authorities, having exhausted the steps pointed out by statute to obtain relief from such bodies, may then pay the illegal exaction, and institute an independent action under section 5750 to recover any payment which he claims to be erroneous or illegal within the provisions of that section. It seems to us plain, therefore, that section 5 above quoted was not intended as a repeal of section 5750.

[2] But if such had been its purpose it would not affect the tax levy for 1912. By section 5666 of the Revised Statutes of Colorado, the tax list and warrant for its collection must be delivered to the county treasurer not later than January 1st following the year for which the tax is levied. By section 5675 no demand by the treasurer

is necessary, but it is made the duty of every person against whom a tax is levied to pay one-half of the same on or before the last day of February, and the remaining half on or before the last day of July of the year following the one in which the tax is levied. Under these statutes the tax for 1912 was complete on the 1st day of January, 1913. The rights and duties of the public and of taxpayers were fixed at that time. This being the case, the remedies which the law then afforded ought to follow the tax until it is collected. The statute of which section 5 above quoted is a part was not approved until May 1, 1913, five months after the tax of 1912 became complete. It should be given a prospective operation only. That is the cardinal rule of construction, which cannot be departed from except in obedience to the express language of the statute. Union Pacific R. R. Co. v. Laramie Stock Co., 231 U. S. 190, 34 Sup. Ct. 101, 58 L. Ed. 179. The statute here involved contains no language of that import. As a rule, statutes relating to taxation are thus construed. Lewis' Sutherland on Statutory Construction, § 645; Matter of Miller, 110 N. Y. 216;[1] American Investment Co. v. Thayer, 7 S. D. 72, 63 N. W. 233; Hall v. Perry, 72 Mich. 202, 40 N. W. 324. Statutes in force at the time a tax is levied continue in force for its collection, notwithstanding their amendment or repeal. City of Indianapolis v. Morris, 25 Ind. App. 409, 58 N. E. 510; Leonard v. Indianapolis, 9 Ind. App. 262, 36 N. E. 725; Oakland v. Whipple, 44 Cal. 303; Smith v. Kelly, 24 Or. 464, 33 Pac. 642; Smith v. Humphrey, 20 Mich. 398; Blakemore v. Cooper, 15 N. D. 5, 106 N. W. 566, 4 L. R. A. (N. S.) 1074, 125 Am. St. Rep. 574; Cooley on Taxation (3d Ed.) p. 499. Section 6298 of the Colorado Statutes supports this view. It provides that the repeal, revision, or amendment of any statute shall not have the effect to release, extinguish, or modify, in whole or in part, any penalty, forfeiture or *liability*, civil or criminal, which shall have been incurred under such statute. The liability of the county to refund any tax found to be illegal was a part of the levy of 1912. It was a right which the taxpayer had with respect to the tax, as well as a liability of the county, and was not taken away or impaired by the subsequent revision contained in the act of 1913. In our judgment, therefore, the remedy granted by section 5750 was open to the plaintiff.

[3] Is the remedy given by section 5750 adequate? It is difficult to follow the reasoning which would hold that it is not adequate. The evil caused by suits in equity to restrain the collection of taxes is grave, and has often been set forth by courts. Dows v. Chicago, 11 Wall. 108, 112, 20 L. Ed. 65; State Railroad Tax Cases, 92 U. S. 575, 23 L. Ed. 663; Indiana Mfg. Co. v. Koehne, 188 U. S. 681, 23 Sup. Ct. 452, 47 L. Ed. 651; Boise Artesian Water Co. v. Boise City, 213 U. S. 276, 29 Sup. Ct. 426, 53 L. Ed. 796. To correct this evil, statutes of similar import to section 5750 have been passed in many of the states of the Union. The highest court of Colorado has frequently declared the correction of this evil to have been the object of its statute. Board of Commissioners of Bent Co. v. Atchison, T. & S. F. Ry. Co., 52 Colo. 609, 125 Pac. 528. The statute is not attacked upon the ground that it is unconstitutional, nor could such an attack, if made, be sustained.

[1] 18 N. E. 139.

The law is, therefore, valid legislation. It was not intended to be cumulative. Its object was to give an action at law for the recovery of sums paid on account of invalid taxes in place of a suit in equity to restrain their collection. Under such circumstances, does it lie with the courts to say that the remedy which the Legislature has provided is inadequate, and that the remedy which it has condemned shall therefore be continued? This would be to make the law of no effect through the traditions of equity. It would not only be judicial legislation, but would nullify a statute which is conceded to be constitutional. It is a mistake to view this statute as relating to procedure only. It creates a right in favor of the aggrieved taxpayer, and, from considerations of the highest public policy, abolishes the right to stay the collection of public revenues by injunction. The courts may not rightfully nullify it upon the ground that the remedy which it gives is less adequate than the one which it takes away. The statute being constitutional, the judgment of the Legislature on that subject must control. Such statutes have been frequently before the Supreme Court, and have been uniformly held to afford a plain, speedy, and adequate remedy such as excludes the right to resort to equity. Tennessee v. Sneed, 96 U. S. 69, 24 L. Ed. 610; Shelton v. Platt, 139 U. S. 597, 11 Sup. Ct. 646, 35 L. Ed. 273; Allen v. Pullman Co., 139 U. S. 658, 11 Sup. Ct. 682, 35 L. Ed. 303; Indiana Mfg. Co. v. Koehne, 188 U. S. 681, 23 Sup. Ct. 452, 47 L. Ed. 651; Singer Sewing Mach. Co. v. Benedict, 229 U. S. 481, 33 Sup. Ct. 942, 57 L. Ed. 1288. Counsel for plaintiff insists that Raymond v. Traction Co., 207 U. S. 20, 28 Sup. Ct. 7, 52 L. Ed. 78, 12 Ann. Cas. 757, is an exception. We do not so regard it. The opinion is expressly based on the ground that there was no statute in Illinois authorizing a single action for the recovery of money paid in discharge of an illegal tax; that the only remedy was the common-law remedy to pay under protest, to enforce which a multiplicity of actions was necessary. 207 U. S. 39 and 40, 28 Sup. Ct. 7, 52 L. Ed. 78, 12 Ann. Cas. 757.

Counsel urges as an "equitable circumstance" that the tax will cast a cloud upon the title to the company's real property. The remedy which the statute prescribes, however, will dissipate any such cloud. Those cases which hold that a cloud upon the title to real property affords a ground for equitable relief are not applicable, when the taxpayer is given the remedy of paying his taxes and recovering back any sum which the courts shall hold to have been illegally exacted.

[4] Counsel also urges that the taxing officers were guilty of fraud in the assessment of plaintiff's property, and that fraud is a ground of equitable jurisdiction. But it is by no means true that wherever fraud exists equity may be resorted to for redress. That is not the case when a legal remedy has been substituted by statute for the remedy in equity. We are not concerned with the cause of the invalidity of the tax. It may be due to illegality, unconstitutionality, or fraud. Whatever the cause, it can do no more than make the tax invalid, and that alone is not a ground of equitable jurisdiction. In rare cases it may happen that the fraud of taxing officers will create a condition which statutes like section 5750 will not enable courts to redress. Cummings v. National Bank, 101 U. S. 153, 25 L. Ed. 903, is mentioned in Bent County

v. Santa Fé R. R. Co., 52 Colo. 609, 125 Pac. 528, as an example of this kind, though in the state of Ohio, where that case arose, there was an express statute authorizing a resort to equity, and the Supreme Court of the United States has since held that Cummings v. National Bank rests upon that statute. Shelton v. Platt, 139 U. S. 591, 599, 11 Sup. Ct. 646, 35 L. Ed. 273. The inability of courts to assess property for purposes of taxation may also cause the remedy at law to be inadequate. Auditor General v. Pioneer Iron Co., 123 Mich. 521, 82 N. W. 260. In our judgment the present case contains no exceptional features of the kind to which we have adverted.

Again, we are told that the remedy given by the statute will lead to multiplicity of suits. The county treasurer is, under the statutes of Colorado, the collector of all taxes, state, county, school and municipal. In the acounting system, which the law provides, he is required to pay over the taxes to the state, city, school, and town authorities as the same are collected. It is therefore urged that, if the plaintiff should pay the taxes here complained of, they would be promptly distributed to the several public treasuries on whose behalf they were levied, and that plaintiff would be compelled to resort to a separate suit against each of these in order to recover the money paid. These difficulties are all of counsel's own creating. They do not exist in the statute. Its language is plain and comprehensive. It provides that:

> "In all cases where any person shall pay any tax, interests or costs, or any portion thereof, that shall be found to be erroneous or illegal * * * the board of county commissioners shall refund the same, without abatement or discount, to the taxpayer."

As to state taxes, there is an express provision giving to the county credit in its accounting with the state for any taxes that have been refunded. We have no doubt that the same remedy would apply as to municipalities, and that the county treasurer could take credit in his settlements made from time to time with them for their proportion of any sum which the county was compelled to pay as a refund. Be this as it may, the language of the statute is plain. It has existed for more than 40 years. It has been repeatedly held by the highest court of the state to afford the taxpayer a plain, speedy, and adequate remedy. We cannot, from speculative reasoning as to difficulties of accounting, hold that the aggrieved taxpayer will not receive, in a single suit against the county, the full compensation which the law provides. All these dangers as to multiplicity of suits were present in the case of Singer Sewing Machine Co. v. Benedict, 229 U. S. 481, 33 Sup. Ct. 942, 57 L. Ed. 1288, and in Indiana Mfg. Co. v. Koehne, 188 U. S. 681, 23 Sup. Ct. 452, 47 L. Ed. 651; and still the remedy provided by the statute was held to be plain, adequate, and complete, so as to exclude a resort to equity.

[5] Finally it is urged that the evidence has been taken and shows the taxes to be illegal, and plaintiff is therefore entitled to keep its money; that to compel it to pay the taxes, and then bring an action to recover its money under the statute, would not be as complete and speedy a remedy as a decree and injunction in this suit. Hence the plaintiff is entitled to relief in equity. But, if this reasoning is sound, the wrong-

ful resort to equity becomes the very ground of equitable jurisdiction. It is true that an injunction could be issued in this case in a shorter time than would be necessary to pay the taxes and begin an action at law and prosecute it to judgment for the recovery of the money. That, however, is not the test. To determine whether the remedy at law is as speedy and adequate as that in equity, the court must place itself at the beginning before any litigation has been started. If the position of counsel were sound, every decision of the Supreme Court, reversing a decree in equity because the remedy at law was adequate, would be wrong. Decisions of this kind are numerous, many of them occurring in suits to restrain the collection of taxes. As the Supreme Court has often said, section 723 of the Revised Statutes (Comp. St. 1913, § 1244) "means something." Buzard v. Houston, 119 U. S. 347, 351, 7 Sup. Ct. 249, 30 L. Ed. 451. It at least emphasizes the rule which it declares. It can be given effect in no other way than by dismissing suits brought in violation of its provisions. We decline, therefore, to express any opinion touching the validity of the taxes. That issue must be determined in an action under the statute.

The decree of the trial court is affirmed.

(217 Fed. 546)

In re LANE LUMBER CO., Limited.

HIRLINGER v. BOYD.

(Circuit Court of Appeals, Ninth Circuit. August 17, 1914.)

No. 2367.

BANKRUPTCY (§ 440*)—APPELLATE PROCEEDINGS—MODE OF REVIEW.

By the filing of a petition for the allowance of his claim as a secured debt, a creditor of a bankrupt institutes a bankruptcy proceeding, and the order made thereon, if the claim is $500 or over, is reviewable by appeal, under Bankr. Act July 1, 1898, c. 541, § 25a (3), 30 Stat. 553 (U. S. Comp. St. 1901, p. 3432), and not by petition to revise under section 24b.

[Ed. Note.—For other cases, see Bankruptcy, Cent. Dig. § 915; Dec. Dig. § 440.*

Appeal and review in bankruptcy cases, see note to In re Eggert, 43 C. C. A. 9.]

Upon Petition for Revision from the District Court of the United States for the District of Idaho, Northern Division; Frank S. Dietrick, Judge.

In the matter of the Lane Lumber Company, Limited, bankrupt. Samuel L. Boyd, trustee. Petition by Johanna Hirlinger to revise an order denying her petition for the allowance of her claim as a secured debt. Petition dismissed.

See, also, 207 Fed. 762, 125 C. C. A. 300; 213 Fed. 587, 130 C. C. A. 167; 217 Fed. 550, 133 C. C. A. 402; 217 Fed. 555, 133 C. C. A. 407.

Frank Langley, of Cœur d'Alene, Idaho, for petitioner.

E. N. Laveine, of Cœur d'Alene, Idaho, for respondent.

John H. Wourms, of Wallace, Idaho, amicus curiæ.

---

*For other cases see same topic & § NUMBER in Dec. & Am. Digs. 1907 to date, & Rep'r Indexes

Before GILBERT and ROSS, Circuit Judges, and VAN FLEET, District Judge.

VAN FLEET, District Judge. The petitioner filed her proof of claim against the bankrupt estate for the balance remaining unpaid on the purchase price of certain lands sold to the bankrupt, in an amount exceeding $500, as an unsecured debt, and the claim was allowed; thereafter she filed a petition asking leave to withdraw the proof of the claim as an unsecured debt and to substitute therefor proof of the same as a debt secured by a vendor's lien on the land sold. The trustee objected to her right to make the substituted proof, but upon hearing the referee granted it, and thereupon the trustee took the matter before the court below for a revision of the order. The action of the referee was set aside by the court, and a judgment entered denying the right to make the substituted proof. This judgment is now brought here upon a petition by the claimant, prosecuted under the provisions of section 24 of the Bankruptcy Act, to have it reviewed and set aside upon the assumption that the case is one falling within the provisions of that section as furnishing the remedy for her relief from the judgment complained of. This mode of proceeding gives rise at the threshold to a question as to our jurisdiction in the premises, of which, although not challenged by the respondent, we are bound upon our own initiative to take cognizance, that the jurisdiction of the court may be protected against unauthorized invasion. The question is whether the judgment is one which may be competently reviewed upon petition for review or should be brought up by appeal. If appeal is the exclusive remedy, then we have no authority to review the judgment in this proceeding. The question turns upon the construction of sections 24 and 25 of the Bankruptcy Act, prescribing the mode of reviewing the different classes of orders and judgments obtained in bankruptcy courts. The provisions of those two sections, so far as pertinent to the question in hand, are as follows:

Section 24:

"(a) The * * * Circuit Courts of Appeals of the United States * * * are hereby invested with apellate jurisdiction of controversies arising in bankruptcy proceedings from the courts of bankruptcy from which they have appellate jurisdiction in other cases.

"(b) The several Circuit Courts of Appeal shall have jurisdiction in equity, either interlocutory or final, to superintend and revise in matter of law the proceedings of the several inferior courts of bankruptcy within their jurisdiction. Such power shall be exercised on due notice and petition by any party aggrieved."

Section 25:

"(a) Appeals, as in equity cases, may be taken in bankruptcy proceedings from the courts of bankruptcy to the Circuit Court of Appeals of the United States * * * in the following cases, to wit: * * *

"(3) From a judgment allowing or rejecting a debt or claim of five hundred dollars or over. Such appeal shall be taken within ten days after the judgment appealed from has been rendered, and may be heard and determined by the appellate court in term or vacation, as the case may be."

The construction of these provisions of the act has given rise to considerable diversity of decision in the federal courts; some holding that the remedies afforded by them are cumulative, and others that they are exclusive as to the class of cases falling respectively within their provisions. We need not stop to review these cases from the lower courts since, in our judgment, the question is set at rest by two comparatively recent rulings of the Supreme Court.

In Coder v. Arts, 213 U. S. 223, 29 Sup. Ct. 436, 53 L. Ed. 772, 16 Ann. Cas. 1008, involving, like the present, a disputed claim of secured debt, the trustee, feeling aggrieved by the action of the bankruptcy court, and being in doubt as to the proper procedure, took the case to the Circuit Court of Appeals for the Eighth Circuit both by petition for review and by appeal. That court dismissed the petition for review, and, after considering the appeal, affirmed the judgment in substance, and an appeal was then taken by the trustee to the Supreme Court. In the latter court the appellee contended that neither that court nor the Court of Appeals had jurisdiction by appeal from the judgment, and in considering that question, after referring to the fact that "questions of the jurisdiction in bankruptcy, particularly of the appellate courts, have given rise to numerous and not altogether reconcilable decisions," the court proceeds to consider and construe sections 24 and 25 of the act, and it is said:

"By paragraph (b) of section 24 the Circuit Courts of Appeals have jurisdiction to superintend and revise in matters of law proceedings of the several inferior courts of bankruptcy within their jurisdiction. The proceeding under this section is designed to enable the Circuit Court of Appeals to review questions of law arising in bankruptcy proceedings, and is not intended as a substitute for the right of appeal upon controverted questions of fact under the right of appeal given in controversies arising in bankruptcy proceedings (section 24), or the special appeal given in certain cases under section 25.

"Section 25 of the act provides for appeals in bankruptcy proceedings, and in such proceedings appeals may be taken from the courts of bankruptcy to the Circuit Courts of Appeals in three classes of cases.

"We are concerned in this case with the third class, 'from a judgment allowing or rejecting a debt or claim of five hundred dollars or over.' The appeal must be taken within 10 days after the judgment.

"It is therefore apparent that the mode of appeal in a given case depends upon the character of the proceeding. And the question to be solved in such cases is, Does the case present a proceeding in bankruptcy or is it a controversy arising in bankruptcy proceedings?"

The court then proceeds to consider its previous rulings bearing upon the subject, and say:

"We are thus brought to the determination of the question, Was the proceeding instituted by Arts a controversy arising in bankruptcy proceedings, or did he institute a bankruptcy proceeding, properly speaking? The answer to this question depends upon an examination of the manner in which the jurisdiction of the bankruptcy court was invoked for the determination of the rights involved."

And after stating the facts as to the presentation and character of the claim it is said:

"We are of opinion that he thus instituted a proceeding in bankruptcy as distinguished from a controversy arising in the course of bankruptcy proceedings. This being the character of the proceeding, its subsequent disposition

and the appropriate appellate jurisdiction are to be determined by the provisions of the bankruptcy act governing bankruptcy proceedings."

And after a full discussion of the conflicting contentions of the parties it is said:

"We, therefore, reach the conclusion that the claim presented instituted a proceeding in bankruptcy, and, being for over $500, it was appealable to the Circuit Court of Appeals, bringing to that court the validity of the asserted lien," etc.

It will be observed that while that case clearly determines the right to review the judgment in such a case by appeal, there is nothing said as to the exclusive character of this remedy. The latter question, however, is concluded, we think, by the subsequent case of Matter of Loving, 224 U. S. 183, 32 Sup. Ct. 446, 56 L. Ed. 725. In that case, likewise arising on a claim of secured debt, the trustee, as here, carried the case to the Circuit Court of Appeals (Sixth Circuit) by petition for revision, and the latter court certified the question to the Supreme Court whether it had "jurisdiction to revise the order of the District Court upon the petition for revision filed under section 24b of the Bankruptcy Act." The question was answered in the negative, the court, referring to its decision in Coder v. Arts, saying:

"Under the decision of this court in that case there can be no doubt that the bank in this case instituted a proceeding in bankruptcy, which was appealable under section 25a to the Circuit Court of Appeals. The fact that after the adjudication of the claim the trustee made no objection to its allowance as a valid claim, but intended only to contest its validity as a lien upon the bankrupt's estate, made no difference as to the appellate character of the controversy. A bankruptcy proceeding was instituted as to the claim and its alleged lien, as distinguished from a controversy arising in a bankruptcy proceeding, and the appeal was under section 25a to the Circuit Court of Appeals. Coder v. Arts, supra.

"The question now propounded is: Was the trustee also entitled to a review in the Circuit Court of Appeals under section 24b by petition for review? Under that section authority, either interlocutory or final, is given to the Circuit Court of Appeals to superintend and revise in matters of law the proceedings of the inferior courts of bankruptcy within their jurisdiction. We think this subdivision was not intended to give an additional remedy to those whose rights could be protected by an appeal under section 25 of the act. That section provides a short method by which rejected claims can be promptly reviewed by appeal in the Circuit Court of Appeals, and, in certain cases, in this court. The proceeding under section 24b, permitting a review of questions of law arising in bankruptcy proceedings, was not intended as a substitute for the right of appeal under section 25. Coder v. Arts, supra, p. 233. Under section 24b a question of law only is taken to the Circuit Court of Appeals; under the appeal section controversies of fact as well are taken to that court, with findings of fact to be made therein if the case is appealable to this court. We do not think it was intended to give to persons who could avail themselves of the remedy by appeal under section 25 a review by petition under section 24b. The object of section 24b is rather to give a review, as to matters of law, where the facts are not in controversy, of orders of courts of bankruptcy in the ordinary administration of the bankrupt's estate.

"In our judgment the rule as well stated in Re Mueller, 135 Fed. 711,[1] by Mr. Justice Lurton, then Circuit Judge (page 715): "The "proceedings" reviewable [under section 24b] are those administrative orders and decrees in the ordinary course of a bankruptcy, between the filing of the petition and the final settlement of the estate, which are not made specially appealable under sec-

[1] 68 C. C. A. 349.

tion 25a. This would include questions between the bankrupt and his creditors of an administrative character, and exclude such matters as are appealable under section 25a.' "

Under the construction here given the sections in question we are constrained to hold that the petitioner has mistaken her remedy, and that we have no jurisdiction to review the present judgment otherwise than upon appeal prosecuted under the provisions of section 25a of the act.

It is not unlikely that the error of petitioner in determining upon the mode of review here sought was based upon the theory that the case fell within section 24b by reason of the incidental fact that the record presents for consideration only the question as to the sufficiency of the findings to support the judgment—purely a question of law—but, as we have seen, that is not the test in determining the appropriate remedy for the review of the action of the court below; the test being, What was the "character of the proceeding" by which the jurisdiction of the bankruptcy court was invoked?

It results that the petition for review must be dismissed; and it is so ordered.

(217 Fed. 550)

In re LANE LUMBER CO., Limited.

BOYD v. WALL.

(Circuit Court of Appeals, Ninth Circuit. August 17, 1914.)

No. 2363.

1. BANKRUPTCY (§ 188*)—VALIDITY OF LIENS—STATUTORY VENDOR'S LIEN.
   Under Rev. Codes Idaho, §§ 3441, 3443, which give a vendor a lien on real property sold "valid against every one claiming under the debtor except a purchaser or incumbrancer in good faith and for value," such a lien is valid as against the trustee in bankruptcy of the purchaser.
   [Ed. Note.—For other cases, see Bankruptcy, Cent. Dig. §§ 270, 286–289, 291–295; Dec. Dig. § 188.*]

2. BANKRUPTCY (§ 188*)—VALIDITY OF LIENS—POWER OF TRUSTEE TO CONTEST.
   The purpose of the amendment of Bankr. Act, § 47a (Act July 1, 1898, c. 541, 30 Stat. 557 [U. S. Comp. St. 1901, p. 3438]) by Act June 25, 1910, c. 412, § 8, 36 Stat. 840 (U. S. Comp. St. Supp. 1911, p. 1500), by providing that as to all property coming into the custody of the bankruptcy court the trustee shall be deemed vested with all the rights, remedies, and powers of a creditor holding a lien by legal or equitable proceedings thereon, was to confer on the trustee the power to contest the sufficiency of any claimed lien, pledge, or security that a lien creditor or judgment creditor might challenge had bankruptcy not intervened, but it does not prescribe any rule by which the validity or priority of such liens is to be determined, and a lien which is valid under the state law as against the claims of such creditors is valid under the bankruptcy law against a trustee since the amendment as well as before.
   [Ed. Note.—For other cases, see Bankruptcy, Cent. Dig. §§ 270, 286–289, 291–295; Dec. Dig. § 188.*]

3. BANKRUPTCY (§ 189*)—LIENS—FAILURE TO RECORD.
   Bankr. Act July 1, 1898, § 67a, c. 541, 30 Stat. 564 (U. S. Comp. St. 1901, p. 3449), which provides that claims which for want of record or

---

*For other cases see same topic & § NUMBER in Dec. & Am. Digs. 1907 to date, & Rep'r Indexes

for other reasons would not have been valid liens as against the claims of creditors of the bankrupt shall not be liens against his estate, applies only to such liens as are required by the state law to be recorded.

[Ed. Note.—For other cases, see Bankruptcy, Cent. Dig. §§ 286–289, 291–295; Dec. Dig. § 189.*]

4. BANKRUPTCY (§ 188*)—VENDOR'S LIEN—VALIDITY.

The fact that a vendor of land to a corporation was its secretary, and that he did not assert his right to a vendor's lien until after its bankruptcy, in the absence of evidence of fraud, *held* not to invalidate his lien.

[Ed. Note.—For other cases, see Bankruptcy, Cent. Dig. §§ 270, 286–289, 291–295; Dec. Dig. § 188.*]

Appeal from the District Court of the United States for the Northern Division of the District of Idaho; Frank S. Dietrich, Judge.

In the matter of the Lane Lumber Company, Limited, bankrupt. Appeal by Samuel L. Boyd, trustee, from an order (210 Fed. 82), allowing the claim of M. K. Wall to a vendor's lien. Affirmed.

See, also, 217 Fed. 546, 133 C. C. A. 398; 217 Fed. 555, 133 C. C. A. 407.

E. N. La Veine, of Cœur d'Alene, Idaho, for appellant.
John H. Wourms, of Wallace, Idaho, amicus curiæ.
Frank Langley, of Cœur d'Alene, Idaho, for appellee.

Before GILBERT and ROSS, Circuit Judges, and VAN FLEET, District Judge.

VAN FLEET, District Judge. On petition for review the court below affirmed the ruling of the referee allowing the claim of the appellee M. K. Wall against the estate and holding him entitled to a vendor' lien upon specific real estate in the hands of the trustee, and the latter appeals from the judgment, the question being whether the lien of the claimant prevails over the rights of the general creditors in the property.

[1] The material facts upon which the judgment rests, as found by the district judge, are that the land held subject to the lien was sold and conveyed by the claimant to the corporation bankrupt on March 6, 1911, at an agreed consideration of $5,000, the amount of the claim allowed, which remained at the date of allowance wholly unpaid and unsecured otherwise than by the personal obligation of the purchaser; that subsequently, on July 11, 1911, the corporation was adjudged an involuntary bankrupt and the appellant duly qualified as trustee; that the title to the property of the bankrupt, including the land declared subject to the lien, passed to the trustee on September 26, 1911; that claimant's proof of debt as a secured claim was duly filed on June 19, 1912, and, objection being made thereto by the trustee, the matter was heard by the referee, resulting in the order allowing the claim as valid and secured by a vendor's lien on the land sold. Upon these facts the court concluded as matter of law:

"That the referee's order complained of by the trustee should be affirmed and said vendor's lien decreed on the property described therein under sections 3441 and 3443, I. R. C., and under the Bankruptcy Act of 1898 and amendments."

*For other cases see same topic & § NUMBER in Dec. & Am. Digs. 1907 to date, & Rep'r Indexes

The sections of the Idaho Revised Codes referred to in the court's conclusion are these:

"Sec. 3441. One who sells real property has a vendor's lien thereon, independent of possession, for so much of the price as remains unpaid and unsecured otherwise than by the personal obligation of the buyer."

"Sec. 3443. The liens of vendors and purchasers of real property are valid against every one claiming under the debtor, except a purchaser or incumbrancer in good faith and for value."

[2] That the federal courts in bankruptcy will recognize and give effect to a vendors' lien provided for by the statutes of the state, in the absence of some act of the vendor or claimant inconsistent with the purpose of claiming a lien or with its continued existence, is well settled. "Such a lien is one which appeals strongly to the favorable consideration of a court of equity." Slide & Spur Gold Mines v. Seymour, 153 U. S. 509, 14 Sup. Ct. 842, 38 L. Ed. 802; Chilton v. Lyons, 67 U. S. (2 Black) 458, 17 L. Ed. 304; Sturdivant Bank v. Schade, 195 Fed. 188, 115 C. C. A. 140. This is conceded by appellant to be the law unless found to be inconsistent with a recent amendment to the Bankruptcy Act, but his contention is that such effect is to be deduced from the language of section 47a of that act, as amended in 1910, which provides that the trustee—

"as to all property in the custody or coming into the custody of the Bankruptcy Court, shall be deemed vested with all the rights, remedies, and powers of a creditor holding a lien by legal or equitable proceedings thereon."

It is claimed that the effect of this amendment is to vest in the trustee, as against all secret or unrecorded liens such as that involved, a title and equity in the property, for the benefit of the creditors of the bankrupt, superior in character to that of the lien of the vendor in all instances where the latter has failed to disclose his claim of lien by some appropriate proceeding to enforce it prior to the vesting of the property of the estate in the hands of the trustee. But we think that this contention involves a misconception of the purpose and effect of the amendment in question. Prior to its adoption the trustee was without power to question the validity of an asserted lien upon the property of the estate, however defective, if the defect were one which could not have been availed of by the bankrupt, the trustee being vested with no higher right as to the property than that possessed by the bankrupt at the time of the devolution of the title upon the trustee. York Manufacturing Co. v. Cassell, 201 U. S. 344, 26 Sup. Ct. 481, 50 L. Ed. 782, and cases there cited. The amendment was obviously designed to cure what was deemed a defect in this regard, and to confer the power upon the trustee, in the interest of the general creditors, to contest the sufficiency of any claimed lien, pledge, or security that "a lien creditor or a judgment creditor might challenge had bankruptcy not intervened." Loveland on Bankruptcy (4th Ed.) § 372. There is nothing in the amendment indicating that its purpose was to prescribe a rule by which the validity or priority of such liens is to be determined or enforced. In that respect the law is left untouched, and the validity and rank of the lien is now to be ascertained by the same applicable principles as obtained prior to the

change; and "a lien which is valid under the state law as against the claims of such creditors, is valid under the bankrupt law as against a trustee since the amendment as well as before it." Id. The amendment, in other words, was designed only to clothe the trustee with the right to question the validity of any lien claimed against the property of the estate which may be defective under the law creating it, notwithstanding the bankrupt might have been estopped to do so. Pacific State Bank v. Coates, 205 Fed. 618, 123 C. C. A. 634, Ann. Cas. 1913E, 846. It goes no further. It does not affect the character of the trustee's title as such. That is defined in section 70 of the act, which clothes the trustee only "with the title of the bankrupt as of the date he was adjudged a bankrupt."

[3] The question, therefore, is, Was the lien of the claimant for any reason defective under the law of the state as against "a creditor holding a lien by legal or equitable proceedings thereon"? If it was, then the trustee may question it; otherwise not. The Bankruptcy Act (section 67a) provides that:

> "Claims which for want of record or for other reasons would not have been valid liens as against the claims of the creditors of the bankrupt shall not be liens against his estate."

But this does not mean, as appellant apparently assumes, that no lien may be maintained against an estate unless or until it has been recorded. Section 67d expressly provides that:

> "Liens given or accepted in good faith and not in contemplation of or in fraud upon the act, and for a present consideration, and which have been recorded according to law, *if record thereof was necessary* in order to impart notice, shall, to the extent of such present consideration only, not be affected by this act."

The present lien was clearly not invalidated for want of record, since, as we have seen, the statute of the state is wholly silent as to any such requirement. Nor is there any provision requiring suit to be brought within any given time to enforce it. As suggested by the court below, an action to foreclose is not material to its validity; "the lien is established by operation of law and is quite as complete before as after the institution of proceedings to foreclose it."

[4] Was the lien invalidated from any other reason? While good faith in the inception of the appellee's claim is not, as in the court below, conceded here, no specific contention is advanced that there was any actual fraud in the transaction, but, based upon certain facts which the judge included in his findings at the appellant's request, the appellant now makes a somewhat general and indefinite contention that it would be inequitable to allow claimant's lien to prevail over the general creditors, and that he should be held estopped to assert its priority. These facts are, in substance, that "the claimant was secretary of the bankrupt with full knowledge of the embarrassed financial condition of the bankrupt at the time of said transfer," which was not ratified by the directors; that "as an officer of the bankrupt" he permitted the land in question to remain on the records as unincumbered; that the trustee had no notice of the vendor's lien until it was filed with the referee; and that the appraised value of the

land is but $919. Appellant urges in his brief that "it is very apparent from the vendor lien claims pending against this estate" that the claimant, "on behalf of the bankrupt, was extremely active and zealous in obtaining titles to tracts of land by making small payments thereon and not protecting the vendors by collateral security. He knew the financial condition of the company. It must have been his ambition to make millions. He knew when he transferred his land to the bankrupt that the credit world had a right to and would assume that he had been paid in full for his land. His very relation with the company and to its creditors, on account of the fraud worked upon them, should estop him from claiming his vendor's lien and defeat his right thereto." Some of these suggestions find no basis in anything appearing in the record, the evidence not being returned, and must therefore be ignored, but so far as they are based upon the findings there is nothing to induce the conclusion that the court below was in error in treating the facts just stated as wholly immaterial in determining the validity of the lien. None of them are of a nature necessarily tending to show fraud in the transaction, either actual or constructive, nor to estop the claimant from invoking his lien. That the land was sold to the corporation "for a present consideration" is not questioned, and the mere disparity between the contract price and the present appraised value is something which might arise from many causes not involving bad faith, and hence, standing alone, has no tendency to show fraud. Nor did the fact that the claimant was an officer of the bankrupt corporation preclude him from dealing with it in a proper case, and there is no showing that this was not such an instance. The other considerations based upon the facts found are equally without merit.

The further contention that the claimant was guilty of culpable laches in not earlier asserting his lien is not only answered by what has already been said as to the law, but is concluded by the express finding of the court that claimant "was not guilty of laches for waiting until after filing of the petition in bankruptcy before attempting to assert his vendor's lien."

Our conclusion is that the judgment of the court below was right, and that the lien allowed must prevail over the rights of the general creditors. A creditor "holding a lien by legal or equitable proceedings" is not "a purchaser or incumbrancer in good faith and for value" (Pacific State Bank v. Coates, supra; Pomeroy's Equity Jurisprudence [3d Ed.] § 721), and under the terms of the Idaho statute the lien there given must give way only as to one of the latter class.

The judgment is affirmed.

(217 Fed. 555)

In re LANE LUMBER CO., Limited.

BOYD v. WALL.

(Circuit Court of Appeals, Ninth Circuit. August 17, 1914.)

No. 2364.

Appeal from the District Court of the United States for the District of Idaho, Northern Division; Frank S. Dietrich, Judge.

In the matter of the Lane Lumber Company, Limited, bankrupt. Appeal by Samuel L. Boyd, trustee, from an order (210 Fed. 82), allowing the claim of Mary Wall to a vendor's lien. Affirmed.

See, also, 217 Fed. 546, 133 C. C. A. 398; 217 Fed. 550, 133 C. C. A. 402.

E. N. La Veine, of Cœur d'Alene, Idaho, for appellant.
John H. Wourms, of Wallace, Idaho, amicus curiæ.
Frank Langley, of Cœur d'Alene, Idaho, for appellee.

Before GILBERT and ROSS, Circuit Judges, and VAN FLEET, District Judge.

VAN FLEET, District Judge. This, like case No. 2363 (Boyd v. M. K. Wall, 217 Fed. 550†) just decided, is an appeal from a judgment affirming the order of the referee awarding a vendor's lien upon property of the bankrupt, and arises out of the same bankruptcy proceeding. Excepting only as to the tract of land involved and the date of sale, the material facts are not to be distinguished in legal effect from those in the last-mentioned case; and, as the appeal is submitted practically upon the briefs in that case and no new points are urged, no further discussion is required, but the judgment may be affirmed on the authority of the opinion filed in that case.

It is so ordered.

(217 Fed. 555)

HARRIS et al. v. MARSH et al.

(Circuit Court of Appeals, Eighth Circuit. September 7, 1914.)

No. 3958.

1. EVIDENCE (§ 442*)—WRITTEN CONTRACT—PAROL EVIDENCE.

Alleged contracts to purchase jewelry were written orders constituting a memorandum, made up of abbreviations, statements of quantities, and a large number of figures, referring to styles in a catalogue. Neither the prices nor terms of sale were stated in the orders themselves, and without the catalogue, which was neither made a part of nor referred to in the orders, they were unintelligible; nor did they contain any reference to warranties. *Held*, that such orders did not constitute an entire written contract, so as to preclude parol proof that the goods were sold under a warranty of quality and a breach thereof.

[Ed. Note.—For other cases, see Evidence, Cent. Dig. §§ 1874–1897; Dec. Dig. § 442.*]

2. SALES (§ 288*)—ACCEPTANCE—WARRANTY—BREACH.

A buyer may accept delivery of goods sold under a warranty of quality, notwithstanding their failure to comply with the warranty, and invoke the seller's breach of warranty by way of counterclaim in reduction of damages, when sued for the price.

[Ed. Note.—For other cases, see Sales, Cent. Dig. §§ 817–823; Dec. Dig. § 288.*]

3. APPEAL AND ERROR (§ 274*)—QUESTIONS RAISED AT TRIAL—EXCEPTIONS.

Where, in a suit for the price of goods sold, the trial court excluded evidence of breach of a parol warranty, on the ground that the contract

---

*For other cases see same topic & § NUMBER in Dec. & Am. Digs. 1907 to date, & Rep'r Indexes

† 133 C. C. A. 402.

of sale was in writing and contained no warranty, and defendants excepted many times to the court's ruling sustaining objections to questions by which it was sought to prove the warranty and breach, their right to review the court's ruling was not lost by reason of failure to except to the court's subsequent ruling directing a verdict for plaintiff.

[Ed. Note.—For other cases, see Appeal and Error, Cent. Dig. §§ 1591, 1592, 1605, 1606, 1607, 1624, 1631–1645; Dec. Dig. § 274.*]

In Error to the District Court of the United States for the Western District of Missouri; Smith McPherson, Judge.

Action by Charles A. Marsh and others against P. Stephen Harris and others. Judgment for plaintiffs, and defendants bring error. Reversed.

Battle McCardle, of Kansas City, Mo., for plaintiffs in error.

P. E. Reeder, of Kansas City, Mo. (New & Krauthoff and M. H. Winger, all of Kansas City, Mo., on the brief), for defendants in error.

Before HOOK, ADAMS, and SMITH, Circuit Judges.

ADAMS, Circuit Judge. This suit was brought by defendants in error against plaintiffs in error to recover the purchase price of certain jewelry alleged to have been sold and delivered by the former to the latter. A lengthy itemized account, showing the articles sold, the dates of sales, and agreed price for each was filed with the petition as an exhibit. Defendants answered, pleading first a failure of consideration, in this: That plaintiffs agreed to manufacture and deliver to defendants jewelry for a certain particular retail trade, and warranted that it should be of certain specified quality, material, and workmanship, and would prove satisfactory to that trade; but that the jewelry delivered did not respond to the warranty, could not be sold to the trade as required, and was substantially worthless. Defendants also set up a counterclaim for damages sustained by them by reason of the breach of the warranty. At the inception of the trial the court ruled that the burden under the pleadings rested upon the defendants to prove the affirmative defenses pleaded by them.

A witness was then called and his examination entered upon, whereupon plaintiffs' counsel objected to the introduction of any testimony in support of the defense or counterclaim. A colloquy ensued between the court and counsel for defendants, in which it was admitted: That the jewelry was received by the defendants, had not been returned, and had not been paid for. That it was purchased upon several written orders addressed to plaintiffs by defendants, of which the following is a fair sample:

Order No..... Date 12—29—09.
C. A. Marsh and Co. Attleboro, Mass.
Ship to Harris-Goar Co.
At 3rd floor Boley Bldg. K. Cy. Mo.
How ship ex. When at once.
Terms. .....
1 doz. ea. v. chains 3003–4–8–11–12–13–14–17–18. 3020–22–23–25–27–28–29–32–33–34–35–36–37–3038–3039–40–42.

That the numbers so specified were found in a catalogue containing a general description of goods for sale by plaintiffs, with a cut or

*For other cases see same topic & § NUMBER in Dec. & Am. Digs. 1907 to date, & Rep'r Indexes

illustration of such goods and a number set opposite each kind of goods so described, and that each party had a copy of this catalogue. The sample order just copied, if translated in connection with the catalogue, would read thus:

December 29, 1909.

C. A. Marsh & Co., Attleboro, Mass.

Ship to Harris, Goar & Co., third floor Boley Bldg., Kansas City, Mo., at once by express, 1 dozen *vest* chains of each of the following numbers, found in the catalogue of which you have a copy: 3003, 3004, 3008, 3011, 3012, 3013, 3014, 3017, 3018, 3020, 3022, 3023, 3025, 3027, 3028, 3029, 3032, 3033, 3034, 3035, 3036, 3037, 3038, 3039, 3040, 3042.

It was further admitted that the jewelry received by defendants corresponded in quantities and styles to the goods ordered. It does not appear that the catalogue contained any warranties, representations, or statements concerning the things alleged in the answer to have been warranted.

The defendants' counsel then propounded questions to the witness tending to prove the facts pleaded by them in their answer. To all questions of this kind plaintiffs' counsel objected, on the ground that a written contract had been entered into between the plaintiffs and defendants, and that the questions propounded sought to vary the terms of that contract by parol, and were for that reason incompetent. This objection was sustained by the court, defendants preserved proper exceptions to each and every such ruling, and error was properly assigned thereon. Not being permitted to introduce any evidence in support of their defenses, the defendants were compelled to rest, and the court, on motion of plaintiffs' counsel, instructed the jury to return a verdict for the plaintiffs for the full amount sued for. This was accordingly done, judgment was rendered on the verdict, and defendants prosecute this writ of error.

The alleged written contract, if any, is found in several written orders for the jewelry, a sample of which appears above. Reference to it discloses that it is a memorandum made up of some abbreviations (doubtless understood in the trade), statements of quantities, and a large number of figures admitted to have been found in the catalogue. Neither the prices nor terms of sale are stated in the orders themselves. Without the catalogue, which it is admitted disclosed the prices, the written orders manifestly would have been unintelligible.

[1] Conceding that with the aid of the catalogue a contract of sale might be made to appear, yet as the contents of the catalogue are not brought to our attention in this record, we have to rely on the admission of counsel that the prices of the jewelry appeared in the catalogue as our only information touching the terms of sale. In view of these facts, we think the written orders were not intended to constitute the entire contract. The catalogue, which was neither made part of the orders nor referred to in them, was absolutely essential to the creation of any contract of sale; but its connection with the orders as a part of them, as well as its contents, had to be established by parol.

Without the catalogue, and without oral testimony connecting the catalogue with the orders, no legal obligation was created. Resort

to some oral proof was therefore necessary to establish such an obligation. The written part of the contract made no reference to warranties whatsoever; accordingly the facts alleged to have been warranted are not inconsistent with any of the provisions of the writing. The warranty could have been made, and every part of the written portion of the contract remain the same. Such being the case, we think oral proof of the warranty sought to be made by the defendants was entirely competent and should have been allowed. Seitz v. Brewers' Refrigerating Co., 141 U. S. 510, 12 Sup. Ct. 46, 35 L. Ed. 837; Leavitt v. Fiberloid Co., 196 Mass. 440, 82 N. E. 682, 15 L. R. A. (N. S.) 855; Rollins v. Claybrook, 22 Mo. 405; Boulware v. Manufacturing Co., 152 Mo. App. 567, 134 S. W. 7; Mercantile Co. v. Tate, 156 Mo. App. 236, 137 S. W. 619. In the Seitz Case the Supreme Court of the United States laid down the rule thus:

"Undoubtedly the existence of a separate oral agreement as to any matter on which a written contract is silent, and which is not inconsistent with its terms, may be proven by parol, if under the circumstances of the particular case it may properly be inferred that the parties did not intend the written paper to be a complete and final statement of the whole transaction between them. * * * And when the writing itself upon its face is couched in such terms as import a complete legal obligation, without any uncertainty as to the object or extent of the engagement, it is conclusively presumed that the whole engagement of the parties, and the extent and manner of their undertaking, were reduced to writing."

In the other cited cases the same doctrine is enunciated.

[2] It is the settled law of this jurisdiction that in cases on contracts of sale involving a warranty the purchaser may accept delivery of the goods purchased by him, notwithstanding their failure to respond to the warranty of the seller, and invoke the breach of the warranty by way of counterclaim in reduction of damages. City of St. Charles v. Stookey, 85 C. C. A. 494, 154 Fed. 772; Omaha Water Co. v. City of Omaha, 85 C. C. A. 54, 156 Fed. 922.

The statute of frauds is invoked by counsel for defendants in error in support of their contention, and to their extended argument in this regard careful attention has been given; but we are unable to perceive its pertinency to the facts of this case.

[3] An extended argument is made in the brief of plaintiffs' counsel to the effect that, as no exception was taken to the action of the court in directing a verdict for the plaintiffs, nothing is reviewable on this writ of error. There is no merit in this argument. The defendants made a most earnest and persistent effort to introduce proof tending to establish their defense and counterclaim. They asked many questions to that end, objections to each and all of which were sustained by the court, and due exceptions allowed. The direction to find a verdict for plaintiffs was an inevitable consequence of prior rulings on the admission of evidence, and no further exception was necessary to "save the point." The only point in the case had already been saved 84 times by actual count.

Objection is made by counsel for defendants in error that the brief of plaintiffs in error does not conform to the requirements of our rule 24 (198 Fed. xxiv, 115 C. C. A. xxiv), in the matter of specifying the part of the charge of the court complained of or quoting the

substance of the evidence improperly admitted or excluded; but, as the record contains neither charge nor evidence, it is difficult to see the applicability of this rule to the present case.

The judgment is reversed, and the cause remanded to the District Court for a new trial.

(217 Fed. 559)

STEARNS SALT & LUMBER CO. v. HAMMOND.

(Circuit Court of Appeals, Sixth Circuit. November 4, 1914.)

No. 2482.

1. BANKRUPTCY (§ 164*)—PREFERENCE—PROCEEDS OF INSURANCE POLICIES.

Where a mortgage obligated the mortgagor to insure the property for the benefit of the mortgage trustee "as a further security," and authorized the trustee to effect the insurance in case of the mortgagor's default, the premium paid to be an additional lien, the nonpayment of which immediately authorized foreclosure, and, after the proceeds of certain policies effected "under the mortgage" had been paid, the mortgagee relinquished a portion of such proceeds to the mortgagor, who had become bankrupt, that it might be repaid and credited on an unsecured account due the mortgagee, such amount, when relinquished, became the mortgagor's property, and a payment thereof to the mortgagee for credit on the unsecured debt constituted a preference.

[Ed. Note.—For other cases, see Bankruptcy, Cent. Dig. § 267; Dec. Dig. § 164.*]

2. BANKRUPTCY (§ 168*)—PREFERENCES—INVALID PAYMENT—RESCISSION.

Where a mortgagee, on collecting certain insurance on the mortgaged property, surrendered a portion thereof to the mortgagor, that it might be repaid to the mortgagee and credited on an unsecured indebtedness, such transaction was not such that, on the repayment being declared a preference, the mortgagee was entitled to rescind the same in toto and claim the right then to credit the money relinquished on the mortgage debt.

[Ed. Note.—For other cases, see Bankruptcy, Cent. Dig. § 234; Dec. Dig. § 168.*]

3. BANKRUPTCY (§ 168*)—PREFERENCES—RIGHTS OF TRUSTEE.

Where a bankrupt delivered certain personal property to its creditor, receiving therefor credit for a specified sum as the price of the property on the bankrupt's indebtedness to the creditor, it appearing that the transfer constituted a voidable preference, the objection, to an action in assumpsit by the trustee to recover the amount, that the creditor had not received money or money's worth for the property, is not well taken.

[Ed. Note.—For other cases, see Bankruptcy, Cent. Dig. § 234; Dec. Dig. § 168.*]

4. BANKRUPTCY (§ 341*)—ALLOWANCE OR DISALLOWANCE OF CLAIMS—"FINAL JUDGMENT."

Action of a referee in bankruptcy allowing or disallowing a claim is a final judgment in the absence of review.

[Ed. Note.—For other cases, see Bankruptcy, Cent. Dig. §§ 516, 528; Dec. Dig. § 341.*

For other definitions, see Words and Phrases, First and Second Series, Final Decree or Judgment.]

5. BANKRUPTCY (§ 341*)—ALLOWANCE OF CLAIMS—"RES JUDICATA."

Since it is of the essence of the doctrine of res judicata that the proposition respecting which it is invoked be adjudicated, either expressly or by necessary inference, the allowance of a claim in bankruptcy to a cred-

---

*For other cases see same topic & § NUMBER in Dec. & Am. Digs. 1907 to date, & Rep'r Indexes

itor who had received a preference, without any express adjudication that a preference had not been created, was not res judicata of that fact, especially where, 30 days after the order allowing the creditor's unsecured claim, an order was entered directing the trustee to sue to recover the preference, and that the estate be kept open until the termination of such litigation.

[Ed. Note.—For other cases, see Bankruptcy, Cent. Dig. §§ 516, 528; Dec. Dig. § 341.*

For other definitions, see Words and Phrases, First and Second Series, Res Adjudicata.]

In Error to the District Court of the United States for the Western District of Michigan; Clarence W. Sessions, Judge.

Suit by William L. Hammond, as trustee in bankruptcy of the Handy Things Company, against the Stearns Salt & Lumber Company. Judgment for plaintiff, and defendant brings error. Affirmed.

Charles McPherson, of Grand Rapids, Mich., for plaintiff in error.
H. T. Heald, of Grand Rapids, Mich., for defendant in error.

Before WARRINGTON, KNAPPEN, and DENISON, Circuit Judges.

KNAPPEN, Circuit Judge. This is a suit by the trustee in bankruptcy of the Handy Things Company against the Stearns Salt & Lumber Company, under section 60b of the Bankruptcy Act (Comp. St. 1913, § 9644), to recover certain alleged preferential payments by the bankrupt. Plaintiff recovered verdict and judgment. The important facts are these:

On May 23, 1908, the Handy Things Company gave a trust mortgage for $35,000 upon its manufacturing plant and substantially all its property of every kind, to secure indebtedness to the Stearns Salt & Lumber Company (hereafter called the Lumber Company) and to a bank of which the mortgage trustee was cashier. One of the factories and part of the personal property was destroyed by fire on February 23, 1911. The mortgage trustee collected, under fire insurance policies upon the property so destroyed, $34,359.04. At this time the Lumber Company held a large unsecured running account against the Handy Things Company, in addition to its mortgage claim. At its request, the Handy Things Company gave the Lumber Company an order on the mortgage trustee to turn over to the Lumber Company $15,000 of the insurance money to be applied upon the open unsecured account mentioned. This payment and application were so made March 23, 1911. The remaining insurance money was applied upon the obligation secured by the mortgage, less $345 premiums upon the insurance policies in question. The mortgage indebtedness was thus entirely paid except about $15,000 still owing the Lumber Company, and the mortgage was continued in force. Between March 15 and March 31, 1911, which was in the month following that of the fire, the Handy Things Company turned over to the Lumber Company certain machinery, lumber, and other supplies, at a price of $3,227.20, which was also applied upon the unsecured claim of the Lumber Company. On April

*For other cases see same topic & § NUMBER in Dec. & Am. Digs. 1907 to date, & Rep'r Indexes

4, 1911, the Handy Things Company was adjudicated bankrupt, upon involuntary petition, the Lumber Company being the principal petitioning creditor, the mortgage trustee being appointed trustee in bankruptcy, as well as receiver. The Lumber Company filed in the bankruptcy proceedings an unsecured claim for $25,888.76, being the amount remaining after the application of the alleged preferential payments, viz., the $15,000 insurance money and the $3,227.20 referred to. The Lumber Company also made proof of claim under the mortgage. To both these claims objections were made on account of the alleged preferences, with request that the trustee be directed to bring suit for the recovery of the preferential payments. Both claims were allowed, and the suit ordered. The total remaining assets of the bankrupt, after payment of expenses, were applied upon the Lumber Company's secured claim, leaving, after the inclusion of interest, a deficit of $1,235.88, and of course leaving nothing (unless through the proceeds of this litigation) for application upon the unsecured claim of the Lumber Company, or upon the claims of other creditors, amounting to upwards of $17,000. The alleged preferences were all within 20 days of bankruptcy. The verdict and judgment were for the full amount of the alleged preferences.

At the close of the testimony, defendant moved for directed verdict on the ground that the $15,000 of insurance money never belonged to the bankrupt's estate, and is therefore not recoverable by the trustee. In this connection it is urged that the policies ran to the mortgage trustee, and not to the mortgagor, a proposition we shall later refer to. It is to be noted that the case presents no controversy respecting the right of the trustee in bankruptcy to the proceeds of insurance upon property conveyed fraudulently or preferentially, under the Bankruptcy Act or otherwise, as was the case in certain decisions relied upon by defendant, such as Forrester v. Gill, 11 Colo. App. 410, 53 Pac. 230, and Insurance Co. v. Grocery Co., 113 Ga. 786, 39 S. E. 483. The mortgage in question was free from taint of fraud or preference. Nor is there here any question of insurable interest on the part of the mortgagee, either on behalf of the insurance company or as between the mortgagor and the mortgage trustee. The insurance company has paid the loss. It must be conceded that, as between the mortgagor and mortgagee, the latter had the prior claim to the insurance money, to the extent necessary to satisfy the mortgage debt, and that it could properly receive the money directly from the insurance company.

[1] The simple question is whether the insurance money to which the mortgagee voluntarily, and for its own supposed benefit, relinquished all claim under the mortgage became thereby, as between the mortgagor and mortgagee, the property of the mortgagor, and so within section 60 of the Bankruptcy Act. The mortgage obligated the mortgagor to insure the property for the benefit of the mortgage trustee, "as a further security" for the mortgage indebtedness, and, in case of the mortgagor's failure to so insure, authorized the trustee to effect insurance, the premium paid to be an additional lien upon the mortgaged property, whose nonpayment immediately authorized foreclo-

sure. We find no evidence that the policies insured only the mortgagee's interest, as distinguished from a policy insuring the mortgagor, with loss payable to the trustee as his interest might appear, unless contained in the testimony of the trustee that:

"Under this mortgage I caused insurance policies to be taken out payable to me as trustee, and it was upon these insurance policies that I collected a little less than $35,000."

In view of the provisions of the mortgage, we do not think the necessary inference from this testimony would be that the policies insured only the mortgagee's interest. In our opinion the natural inference would be that the usual practice in such cases was followed, viz., the issuance of the policies in the name of the mortgagor as the insured, with the well known standard-policy mortgage loss clause, making loss, if any, payable to the mortgagee (trustee) as its "interest may appear." The statement that the insurance was effected *under the mortgage* naturally, we think, so implies. It is noticeable that the testimony is not that the policies ran to the trustee, or that they insured only his interest, but that they were "payable" to him "as trustee." Under such a policy the mortgagor, under familiar principles, would plainly be entitled to the insurance, except so far as needed or desired by the mortgagee for the payment of his mortgage. But if the testimony is to be interpreted as meaning that the policy actually ran to the trustee, and did not in terms secure the mortgagor's interest, yet, under the circumstances stated, including the facts that the insurance was taken by virtue of the mortgage provision and at the expense of the mortgagor, the latter was entitled to its benefit to the extent of having its proceeds applied pro tanto to the liquidation of the mortgage debt (Pendleton v. Elliott, 67 Mich. 496, 498, 35 N. W. 97), and equitably, at least, was entitled to whatever was collected beyond the amount necessary or desired to satisfy the claims of the mortgagee thereto. See Wheeler v. Insurance Co., 101 U. S. 439, at page 441, 25 L. Ed. 1055; and see Brown City Savings Bank v. Windsor (C. C. A. 6th Cir.) 198 Fed. 28, 30, 117 C. C. A. 136, 41 L. R. A. (N. S.) 1012, and following, where the relative rights of mortgagor and mortgagee under the mortgage loss provisions in insurance policies are discussed in an opinion by Judge Warrington.

To say the least, it was entirely competent for the Lumber Company to waive its claim to the insurance money and to surrender it to the mortgagor, making it the latter's property; and this we think it practically and effectually did by the course taken, and as effectively as if the money had first been paid over to the mortgagor and afterwards paid by it to the Lumber Company. Circuity of arrangement will not alter the force of a transaction preferential in fact. Newport Bank v. Herkimer Bank, 225 U. S. 178, 184, 32 Sup. Ct. 633, 56 L. Ed. 1042. True, there can be no preferential transfer without a depletion of the bankrupt's estate; Continental Trust Co. v. Chicago Title Co. 229 U. S. 435, 443, 33 Sup. Ct. 829, 57 L. Ed. 1268; In re Kerlin (C. C. A. 6th Cir.) 209 Fed. 42, 44, 126 C. C. A. 184. But, in any view which may be taken of this case, it is obvious that the transfer in question did necessarily operate to deplete the assets available to the general and

unsecured creditors; for had it not been made, the Lumber Company's secured claim would have been paid to the extent of $15,000, and the remaining mortgaged property would, to the like extent, have been free for application to the claims of general creditors, instead of being ultimately absorbed in payment of the Lumber Company's secured claim.

[2] But it is urged that the alleged preferential transaction was a single one, consisting of the payment of the insurance money to defendant and its application upon the unsecured debt; that if the transaction was void, the insurance money is still in defendant's hands as insurance money, and free from any lien or claim on the part of the bankrupt or its trustee; that by the course taken the trustee has succeeded in taking the benefit of the transaction and in avoiding its burdens, in violation of the rule that one seeking to rescind must do so in toto. We think this argument involves the misconception that the bankrupt has no concern with the disposition of the insurance money. If, as we are not at all sure, defendant's contention is that through the form of action adopted by the trustee it has lost the opportunity to now apply the insurance money upon the secured instead of the unsecured debt, we think there is no merit in it. Had the remaining mortgaged property realized enough to pay defendant's secured debt, it would gain nothing by now applying instead the repaid insurance money. It may be that as the estate has turned out, and in view of the trustee's recovery of judgment for the preferential payment, defendant would be better off by now making such change of application. This would, of course, release for unsecured creditors generally the bulk of the money applied under the bankruptcy proceedings upon defendant's secured debt. It may also be that, had restitution of the preferential payment been offered or assented to, defendant might have obtained such relief, if desired, either in the bankruptcy proceedings or by appropriate action otherwise. But this question does not require consideration, for not only has restitution never been offered or assented to, but the proceeds of the remaining mortgaged property were, apparently at defendant's instance, applied, under the bankruptcy proceedings, upon its secured claim. If, as has been judicially determined, the transaction was preferential in character, the trustee had the right to sue at law to set it aside; and if the ultimate result is not so favorable to defendant as, under other circumstances, it might have been, defendant has not been legally prejudiced. We think the court did not err in refusing to direct verdict for defendant, or in permitting recovery on the theory that the bankrupt was concerned in the insurance.

[3] It is objected that the common-law action of assumpsit cannot be maintained for the items amounting to $3,227.20, turned over to defendant, for the reason that it does not appear that the latter has received money or money's worth for the property, and that in the absence of such showing trover is the appropriate remedy. It is the general rule in Michigan that assumpsit cannot be maintained against a tort-feasor for the conversion of personal property to his own use, unless he has converted it into money or money's worth. Grinnell v. Anderson, 122 Mich. 533, 537, 81 N. W. 329; Lyon v. Clark, 129

Mich. 381, 384, 88 N. W. 1046. The District Judge was of opinion that there was a conversion of the property into money by the very act of defendant in taking the property "and applying its value in payment of" its unsecured claim. The Supreme Court of Michigan, in Lyon v. Clark, supra, held that assumpsit would not lie under section 67e of the Bankruptcy Act (Comp. St. 1913, § 9651) for property fraudulently conveyed, unless converted into money or money's worth. The question would present no difficulty if we were at liberty to consider as an admission the deposition of defendant's vice president, taken on its behalf in this case, though not introduced in evidence and not a part of the bill of exceptions, although sent up with the record, by stipulation of counsel, at plaintiff's request; for that officer there says of the items in question that "we bought them and paid the purchase price for them and used them in other places."

But disregarding this testimony, and assuming, for the purpose of this opinion, that we are bound by the rule respecting remedy which prevails in the state court, we think the District Judge did not err in the view taken. Lyon v. Clark was not an action to recover a preferential payment, under section 60b, but to recover the value of property fraudulently conveyed. The action there was for the value of the property, and apparently without reference to what defendant paid for it. The action here is not to recover on account of a tort, but merely the amount of a preferential payment, viz., the actual amount at which the defendant received and accepted the property as a payment upon its claim. The transaction, as affects this action, is not essentially different than if the property had been money. It was received at an agreed price, and was to all intents and purposes an actual purchase at such price, the difference being that, instead of the price being paid to the bankrupt and then by it repaid to defendant for application upon the debt, the same result was accomplished by direct application.

[4] Finally, it is contended that the allowance of defendant's claims by the referee is res judicata of the question of preferential payment and transfer. It is well settled that the action of a referee in bankruptcy allowing or disallowing a claim is a judgment, final in the absence of review; and Clendening v. National Bank, 12 N. D. 51, 94 N. W. 901, is cited as holding that the order of a referee permitting a defendant to retain alleged preferences, and allowing its claim for the balance, is an adjudication that the claim so allowed to be retained did not constitute a preference, and was not reviewable in the absence of appeal.

[5] Assuming the correctness of that decision as applied to the facts of the case, we think it has no application to the case before us. It is of the essence of the doctrine of res judicata that the proposition respecting which it is invoked be adjudicated either expressly or by necessary inference. There was no express adjudication that a preference was not created, and the record clearly repels all implication of such determination; for the order allowing defendant's unsecured claim was not made until 30 days after the order directing the trustee to sue, and on the day of its allowance an order was made that the

estate be kept open until the end of the litigation, presumably to provide for the distribution of the recovery, if any.

We find no error in the record, and the judgment of the District Court is affirmed, with costs.

(217 Fed. 565)

MUTUAL LIFE INS. CO. OF NEW YORK v. POWELL.

(Circuit Court of Appeals, Fifth Circuit. October 5, 1914.)

No. 2549.

INSURANCE (§ 378*)—LIFE INSURANCE—WAIVER AFFECTING RIGHT TO AVOID POLICY FOR FRAUD—COLLUSION OF AGENT.

The insured in a life policy, in her application, which was made a part of the contract, with a provision that in the absence of fraud the statements therein should be deemed representations, and not warranties, in answer to questions by the medical examiner, stated that she had been subject to no illness or disease since childhood and was in good health; that she had consulted no physician within five years, had undergone no surgical operation, nor been treated in a hospital. All of such statements were false, and known to be so by her and by the medical examiner; but such fact was not communicated or known to the company. She was in fact afflicted at the time with a mortal disease, for which she had undergone a surgical operation in a hospital, and which caused her death within ten months after issuance of the policy. Such facts were undisputed. *Held*, that the fact that the medical examiner was the agent of the company did not charge it with knowledge of the facts known to him and that the fraud avoided the policy.

[Ed. Note.—For other cases, see Insurance, Cent. Dig. §§ 968–997; Dec. Dig. § 378.*]

In Error to the District Court of the United States for the Southern District of Georgia; Emory Speer, Judge.

Action at law by W. C. Powell, administrator of the estate of M. Emma Powell, deceased, against the Mutual Life Insurance Company of New York. Judgment for plaintiff, and defendant brings error. Reversed.

James H. Gilbert, of Atlanta, Ga., and William H. Fleming, of Augusta, Ga., for plaintiff in error.

James N. Talley, of Macon, Ga., and John T. West, of Thomson, Ga., for defendant in error.

Before PARDEE and SHELBY, Circuit Judges, and FOSTER, District Judge.

FOSTER, District Judge. This is an action on a policy of life insurance, brought by W. C. Powell, as administrator of the estate of his deceased wife, M. Emma Powell. The defendant admitted the issuance of the policy sued on and the receipt of the premium, return of which it tendered, but set up that the policy never took effect, as a contract binding upon the defendant, because at the time of the payment of the first premium and the issuance of the policy the applicant was not in good health, but was afflicted with a disease which caused her death within less than seven months thereafter, to wit, carcinoma or

*For other cases see same topic & § NUMBER in Dec. & Am. Digs. 1907 to date, & Rep'r Indexes

cancer of the breast, of which fact defendant was ignorant at the time of the payment of the premium and the issuance of the policy, and continued ignorant until after the death of the applicant, relying upon statements of the applicant which were false. The policy was issued February 9, 1910, and the insured died on December 6, 1910, of cancer, shorty after an operation by which her entire left breast was removed.

At the close of the evidence defendant moved the court to direct a verdict in its favor, which was denied. This action of the court is one of the errors assigned.

The policy contains the following clauses:

"This policy and the application herefor, a copy of which is indorsed hereon, or attached hereto, constitute the entire contract between the parties hereto. All statements made by the insured shall, in the absence of fraud, be deemed representations, and not warranties, and no such statement of the insured shall avoid, or be used in defense to, a claim under this policy, unless contained in the written application herefor, copy of which is indorsed hereon, or attached hereto."

"Agents are not authorized to modify this policy or to extend the time for paying a premium."

The application, made part of the policy, contains the following clause:

"All the following statements and answers, and all those that I make to the company's medical examiner, in continuation of this application, are true, and are offered to the company as an inducement to issue the proposed policy, which shall not take effect unless and until the first premium shall have been paid during my continuance in good health, and unless also the policy shall have been issued during my continuance in good health."

The medical examiner's report, as set out in the policy, contains, among others, the following questions and answers (the answers are italicized):

"4. What illnesses, diseases, or accidents have you had since childhood? (The examiner should satisfy himself that the applicant gives full and careful answers to this question.)

"Name of disease, etc.: *None.* Number of attacks: *None.*

"5. Have you stated in answer to question 4 all such illnesses, diseases, or accidents? *Yes.*

"6. State every physician who has prescribed for you or whom you have consulted in the past five years.

"Name of physician: *None.* Address: *None.* When consulted. Give nature of complaint. Give full details above under Q. 4. (*No answer.*)

"7. (a) Are you now in good health? *Yes.* (b) If not, what is the impairment? (*No answer.*) * * *

"10. Have you undergone any surgical operation? *No.* * * *

"17. (a) Have you ever been under treatment at any asylum, cure, hospital, or sanitarium? *No.* (b) If so, when, how long, and for what cause? (*No answer.*)

As to her said answers the insured signed the following certificate:

"I certify that my answers to the foregoing questions are correctly recorded by the medical examiner.

"[Signature of the person examined.] M. Emma Powell."

All the above answers were untrue. It is shown that in 1904 the insured consulted Dr. Groves, who was her family physician, and who also conducted the medical examination for the insurance company, about a sore on her left breast, and he sent her to Dr. Culbertson, a

specialist in such matters, who treated her; that in 1907 she again consulted Dr. Groves, who this time sent her to Dr. Oertel, also a specialist, and he in turn took her to a hospital, where she remained two days and underwent an operation by Dr. Crane, by which her left nipple and some surrounding tissue were excised. Defendant also offered evidence to the effect that the said answers were material, and, had they been answered truthfully, the policy would not have issued. There was also some showing that other answers regarding family history were materially false. All of the physicians testified in the case, except Dr. Groves, who was deceased. Dr. Culbertson testified that he diagnosed the sore on her breast as epithelioma, or skin cancer, and was under the impression that he had so informed her and her husband; and Dr. Crane testified that the disease for which he excised the nipple was Paget's disease, which he now considers always develops into cancer.

Had the case ended here, the defendant undoubtedly would have been entitled to a directed verdict, regardless of whether the statements to the medical examiner be considered as warranties, because of the apparent fraud, or merely as representations, since they were untrue and material to the risk.

But plaintiff seeks to avoid the effect of the false answers on the theory that the insured was in good faith and made true answers to the questions propounded, but that they were incorrectly recorded by the medical examiner; that the insured relied upon his advice in permitting the answers as written to stand; that the said doctor was the agent of the insurer, and had full knowledge of the facts, and the company is charged with his knowledge and bound by his acts.

To support this theory the plaintiff was sworn as a witness in his own behalf, and testified that he was present when his wife was examined by Dr. Groves prior to her visit to Dr. Culbertson, and he was also present when she was examined for the insurance policy. His testimony in part is as follows:

"Q. Mr. Powell, when those questions were asked about the treatment, what treatment she had had, surgical operations and things of that kind, what answer did she make Dr. Groves? A. She says to Dr. Groves, 'You know my condition;' she says, 'You know I have been treated by you and Dr. Culbertson and Dr. Oertel; what should my answer be in a case like that?' The doctor says, 'You are done and well now; you have been well for four years; you haven't felt any effects of this place,' he says; 'I would answer in the negative; I would answer, "No"—that I was not in the hospital, and was not treated, according to the questions asked in the application.' Q. Who wrote those answers? A. Dr. Groves."

And he testified to similar conversations regarding the other questions, not necessary to set out more in detail.

Plaintiff cites the case of Fidelity Mutual Life Association v. Jeffords, 107 Fed. 402, 46 C. C. A. 377, 53 L. R. A. 193, decided by this court, and Continental Life Insurance Co. v. Chamberlain, 132 U. S. 304, 10 Sup. Ct. 87, 33 L. Ed. 341, as controlling authority, and various other cases along the same line. We do not think the two cases above cited are analogous to the one at bar.

In the Jeffords Case it was contended that, while the insured was afflicted with incipient consumption, he did not know it; that he men

tioned several doctors who had treated him, but had merely forgotten to mention others; that under the Georgia Code, if in good faith, he could recover. The evidence was conflicting, and there was no motion to direct a verdict. The ruling of the court was only as to the charges given and refused. Here there is no conflict of evidence. The insured knew the facts, had not forgotten them, and actually discussed them at the time of answering the questions.

In the Chamberlain Case the false representation was as to other insurance. The insured was a member of certain co-operative societies, and informed the agent of that fact, and after considerable discussion it was decided to answer the question as to other insurance in the negative. There was no question as to the good faith of either the insured or the agent, and there was some latitude for difference of opinion.

The conduct of the insured in this case is incompatible with good faith. It may be that neither she nor her husband knew that she was afflicted with cancer, as all people are prone to deceive themselves with regard to lingering and fatal maladies; but even as to this there is considerable doubt. But it is unbelievable that she did not know that the trouble with her breast was serious, as otherwise her family physician would not have sent her to specialists. She could not help knowing that she had undergone a surgical operation, that she had been treated in a hospital, and that she had consulted physicians within five years before the application for the policy. As to her knowledge of these facts the testimony of her husband removes all doubt.

It would be fruitless to attempt to analyze and reconcile the many apparently conflicting decisions on this subject, though doubtless there are special facts in each case to distinguish it from the others, as in our opinion this case is controlled by the decisions in New York Life Insurance Co. v. Fletcher, 117 U. S. 519, 6 Sup. Ct. 837, 29 L. Ed. 934, Ætna Life Insurance Co. v. Moore, 231 U. S. 543, 34 Sup. Ct. 186, 58 L. Ed. 356, and Prudential Insurance Co. v. Moore, 231 U. S. 560, 34 Sup. Ct. 191, 58 L. Ed. 367. In this case it is apparent that a gross fraud was perpetrated on the insurer, which would have been impossible without the active participation of the insured. The medical examiner was not the agent of the company for the purpose of defrauding it. It had the right to rely on the statements of the insured that her answers were true and had been correctly recorded by the doctor, and it is not estopped to set up their falsity.

In the Fletcher Case, supra, the facts and contentions were practically the same as here, and the court, through Mr. Justice Field, quoting with approval the language of the Supreme Court of Connecticut, said:

"But it cannot be supposed that these defendants intended to clothe this agent with authority to perpetrate a fraud upon themselves. That he deliberately intended to defraud them is manifest. He well knew that, if correct answers were given, no policy would issue. Prompted by some motive, he sought to obtain a policy by means of false answers. His duty required him not only to write the answers truly as given by the applicant, but also to communicate to his principal any other fact material to the risk which might come to his knowledge from any other source. His conduct in this case was a gross violation of duty, in fraud of his principal, and in the interest of the other party. To hold the principal responsible for his acts, and assist in the

consummation of the fraud, would be monstrous injustice. * * * The fraud could not be perpetrated by the agent alone. The aid of the plaintiff or insured, either as an accomplice or as an instrument, was essential. If she was an accomplice, then she participated in the fraud, and the case falls within the principle of Lewis v. Phœnix Mutual Life Insurance Co., 39 Conn. 100. If she was an instrument, she was so because of her own negligence, and that is equally a bar to her right to recover."

In the two Moore Cases cited above the provisions of the Georgia Code were considered by the Supreme Court, and the decisions are clearly to the effect that where the statements in the application and answers to the medical examiner were false and material, if undisputed, the question of good faith was not one for the jury. It is true that the policies in the said two cases contained clauses to the effect that no statement or declaration made to any agent or examiner or other person not contained in the application could be taken or construed as having been made to or brought to the notice and knowledge of the company. While the language of the policy under consideration as contained in the clauses above quoted is somewhat different, its effect is the same. But this is immaterial, as on the undisputed facts the fraud was apparent.

In this case the defendant was entitled to a directed verdict. The overruling of the motion to that effect was error, and the judgment must be reversed. As the same questions are not likely to arise on the next trial of the case, it is unnecessary to consider the other assignments of error.

Reversed and remanded.

(217 Fed. 569)

PRUDENCE COAL CO. v. PERKINS.

(Circuit Court of Appeals, Fourth Circuit. September 8, 1914.)

No. 1,250.

1. MINES AND MINERALS (§ 70*)—CONSTRUCTION OF COAL LEASE—PRACTICAL CONSTRUCTION BY PARTIES.

   Where a lessee of coal lands paid royalties for ten years, three of which were after the death of the lessor, on a certain construction of the terms of the lease, which were somewhat ambiguous, it will be taken as the true construction as against the lessee.

   [Ed. Note.—For other cases, see Mines and Minerals, Cent. Dig. §§ 192–197; Dec. Dig. § 70.*]

2. MINES AND MINERALS (§ 70*)—ACTION FOR ROYALTIES UNDER DEED OF LEASE—PLEADING.

   A lessor of coal lands may recover royalties due under the lease on coal previously mined and sold by the lessee under the common counts in assumpsit in West Virginia, where by statute assumpsit may be maintained on a sealed contract.

   [Ed. Note.—For other cases, see Mines and Minerals, Cent. Dig. §§ 192–197; Dec. Dig. § 70.*]

In Error to the District Court of the United States for the Southern District of West Virginia, at Charleston; Benjamin F. Keller, Judge.

---

*For other cases see same topic & § NUMBER in Dec. & Am. Digs. 1907 to date, & Rep'r Indexes

Action at law by Annette S. Perkins against the Prudence Coal Company. Judgment for plaintiff, and defendant brings error. Affirmed.

W. G. Mathews, Malcolm Jackson, Mollohan, McClintic & Mathews, and Brown, Jackson & Knight, all of Charleston, W. Va., for plaintiff in error.

Geo. E. Price, of Charleston, W. Va., for defendant in error.

Before PRITCHARD and KNAPP, Circuit Judges, and McDOWELL, District Judge.

McDOWELL, District Judge. This is an action of assumpsit instituted August 30, 1912, by the defendant in error, the legatee of J. A. McGuffin, who will be hereafter referred to as the plaintiff, against the plaintiff in error, a corporation, which will be hereafter called the defendant. The declaration contains only the common counts. With it was filed a bill of particulars, which fully details the nature and items of plaintiff's claim. The defendant pleaded non assumpsit and offsets, and filed with the latter an account of offsets. The case was tried before a jury, and resulted in a directed verdict and judgment for the plaintiff.

On May 1, 1900, Mrs. Sarah Lyman and her husband made to J. A. McGuffin a coal mining lease of a tract of 138 acres. The lease was to run until all the workable and merchantable coal should have been mined from the leased tract and from other tracts operated in connection therewith, but not to exceed 30 years. The royalty agreed upon was 6 cents per ton of 2,240 pounds of coal mined from the leased premises. The following is the stipulation as to minimum:

"If the said royalty in any year or years after the period of one year from the date of this lease, and before all the coal is mined from said land as hereinafter provided, shall not under the provisions above set out amount to the sum of five hundred dollars ($500.00), then the lessee shall pay said sum of five hundred dollars ($500.00) to the said Sarah E. Lyman, her heirs and assigns, as a minimum rental for that year, but the excess of said five hundred dollars ($500.00) so paid over the amount of coal mined in that year at six (6) cents per ton of two thousand two hundred and forty (2,240) pounds, shall be credited on the excess of royalty over and above the five hundred ($500.00) dollars in the next succeeding year, provided the same is done within one (1) year from the end of the year in which the said sum of five hundred dollars ($500.00) rental becomes due and payable."

In this lease McGuffin was given the right to assign the lease to a corporation already chartered or to be chartered, and it is provided that the coal on the leased premises is to be mined "in connection with mines upon lands leased from Morris Harvey or any other person or persons." Under this lease the royalties are payable in quarterly installments on the 1st days of January, April, July, and October of each year.

On April 18, 1900, the said McGuffin secured another coal lease from C. T. Jones and others, for a term of 40 years, at a royalty of 5½ cents per ton of 2,240 pounds. The agreement as to minimum here follows:

"If the said royalty in any year or years after the year 1902, and during the term of this lease, shall not under the provisions above set out amount to the sum of four thousand dollars, then the lessee shall pay said amount of $4,000 as a minimum royalty for that year, but the excess of said $4,000 so paid over the amount of coal mined in that year at five and one-half cents per ton of 2,240 pounds, shall be credited on the excess of royalty over and above the four thousand dollars in the next succeeding year, provided the same is done within two years from the end of the year in which the said sum of $4,000 royalty becomes due and payable."

The royalty payments became due in quarterly installments on the same days as under the Lyman lease.

On November 28, 1900, McGuffin secured another coal lease from Morris Harvey. The royalty was 6 cents per ton of 2,240 pounds, payable quarterly, commencing April 1, 1902. No minimum is required.

On December 19, 1900, H. E. Firmstone and J. E. Johnson made a lease to McGuffin, which, as subsequently modified, provided for a royalty of 6 cents per long ton, payable quarterly on the same days as under the foregoing leases. The modified provision as to minimum royalty is as follows:

"If the said royalty, in any year or years, after the year 1902, and during the term of this lease, shall not, under the provisions above set out, amount to the sum of $2,000, then the lessee shall pay said amount of $2,000 as a minimum royalty for that year. But, should the actual royalty at 6 cents per ton, of 2,240 pounds, and 75 cents per 1,000 tons, as above provided, not equal the said sum of $2,000 in any year, the said lessee shall have the right to reimburse itself, without interest, by mining sufficient coal at the rate of royalty aforesaid, in excess of $2,000 per annum, at any time and in any year or years during the term of this lease."

This lease also provides for assignment to a corporation already chartered or to be chartered, and provides that the mining on the leased premises is to be carried on in connection with the mining of the Harvey land, the Jones land, and other lands.

On January 1, 1901, McGuffin executed a contract under seal to the Prudence Coal Company. After a recital that McGuffin owns leases from C. T. Jones et al., Mrs. Lyman, Morris Harvey, and from Firmstone and Johnson, this document, inter alia, provides:

"That the said party of the second part shall assume, observe, perform, and comply with each and all the obligations, covenants, provisions, and conditions contained in said several leases which the said party of the first part is obliged thereby to observe, perform, and comply with, and especially shall pay to the said several lessors therein named, or their assigns, the rents and royalties and all sums of money therein required to be paid to them by said party of the first part, and shall protect and save harmless the said party of the first part, from all claims of the said lessors or their assigns for said rents, royalties, and sums of money.

"That the said party of the second part, in addition to the rents and royalties to be paid by it to the said lessors as hereinbefore provided, shall pay to the said J. S. McGuffin, party of the first part, his personal representatives or assigns, such further rent or royalty as, with the rent and royalty provided for in said respective leases, will make ten cents rent or royalty for each and every ton of coal mined or dug by it from said respective leasehold properties upon which royalty is to be paid under said leases. The said additional rent or royalty to be paid to the said party of the first part by the said party of the second part at the same time or times that the original rents or royalties mentioned in said leases are payable, respectively, to the several lessors

therein named. And the tonnage upon which such additional rents or royalties are to be paid to the said party of the first part, so as to make up said 10 cents per ton, shall be determined in the same manner as the tonnage is determined for the rents and royalties to be paid to the said lessors; it being the intention of the parties hereto that the said party of the second part shall pay altogether the royalty of 10 cents per ton for all the coal mined from said leasehold premises upon which royalty is payable under said leases, and that it shall pay to the several lessors the rents and royalties provided for in their several leases, respectively, and then pay to the said J. A. McGuffin, party of the first part, his personal representatives or assigns, the balance of said 10 cents over and above what is paid to the said lessors.

"The said party of the second part shall stand in all other respects in the place of the said party of the first part under the said several leases hereinbefore transferred and assigned to it.

"And in consideration of the premises and the assignment to it of the leases and leasehold estates aforesaid, the said Prudence Coal Company, party of the second part, hereby covenants and agrees with the said party of the first part that it will observe, perform, and comply with all the obligations, covenants, stipulations, and conditions contained in the several leases hereinbefore assigned to it, and that it will pay to the several lessors therein named all the rents, royalties, and sums of money therein provided to be paid by the said J. A. McGuffin, and will protect and save the said McGuffin harmless from all claims on the part of said lessors for such rents, royalties, and sums of money, and that it will pay to the said party of the first part, his personal representatives or assigns, the additional rents and royalties provided for in said several leases, so as to make the rent or royalty of 10 cents per ton upon each and every ton of coal mined and upon which royalty is payable under said leases, as hereinbefore fully set forth."

The following were agreed facts:

"First. That prior to the execution of the lease from H. Firmstone and J. E. Johnson and wife to J. A. McGuffin, and prior to the assignment thereof, along with other leases, by the said McGuffin to the Prudence Coal Company by the deed of January 1, 1901, said Firmstone and Johnson had been long and close business associates in other coal properties with the said McGuffin, and personal friends, and that prior to the execution of both said lease and said assignment it was agreed and understood between said Firmstone and Johnson, on the one hand, and said McGuffin, on the other hand, that if said lease was made to said McGuffin that it, together with the other leases taken by said McGuffin, were to be assigned by him to a corporation to be formed, and that said Firmstone and Johnson were to purchase, take and own a controlling stock interest in said corporation, to wit, 60 per cent. of said stock, and said McGuffin and other associates the residue, to wit, 40 per cent., and that the entire management and full control of said properties was to be given the said McGuffin, who was to be elected president of said corporation, and that this agreement constituted one of the considerations of said lease from Firmstone and Johnson to said McGuffin, and was subsequently fully carried out by the assignment of said leases to the Prudence Coal Company, the purchase of stock therein, the election of said McGuffin as president, and the adoption of resolutions vesting him with full control and management of said properties for said corporation, and the assumption and discharge by him of such duties, until he sold his stock in said company on the 1st day of May, 1906.

"Second. That said lands so leased by said Firmstone and Johnson were essential to the economical mining of the other lands leased by said McGuffin and assigned to said company, and lay between said other lands and the Chesapeake & Ohio Railway and Kanawha river.

"Third. That for the year 1902 all of the rents and royalties due under said leases were paid by the defendant by check to said McGuffin, who was left to settle with his lessors, and thereafter until said McGuffin sold his stock and retired as president, on the 1st day of May, 1906, he caused himself to be paid by said company under his management a royalty of 4 cents per ton on each ton of coal actually mined and dug from the Lyman lease, the Firmstone

and Johnson lease, and the Harvey lease, and 4½ cents per ton for the Jones lease, without regard to the minimum royalty exceeding, equaling, or being less than the actual tonnage royalty due in each year under said leases, respectively, to the lessors therein which minimum royalty was paid said lessors during each year, *and that after the death of said John A. McGuffin until the third quarter of* 1911 *said like royalty was paid to the estate of John A. McGuffin, and that after said sale of stock by said McGuffin and until his death like royalties were paid him by said company.*

"Fourth. That the minute books of said company do not show that the propriety and amounts of royalties payable to said McGuffin, or his assigns, under said assignment of January 1, 1901, was brought before the stockholders or directors, or was at any time the subject of corporate action by either.

"Fifth. That the following is the number of tons actually mined and dug from all of said leased premises during the following quarters, respectively:

For the quarters ending	Lyman Lease.	Firmstone & Johnson Lease.	Harvey Lease.	Jones Lease.	Total.
Sept. 30, 1911	2,639	21,185	1,882	11,683	155,397
Dec. 31, 1911	3,657	18,308	1,388	10,796	141,633
March 31, 1912	1,669	18,882	1,462	12,484	144,229
June 30, 1912	2,156	20,815	2,267	14,653	166,889

"Sixth. That the usual and ordinary royalty under mining leases in the New River district at the time of the execution of the leases and assignment aforesaid was 10 cents per ton royalty on coal actually mined.

"Seventh. That said defendant took possession of said leases and leaseholds shortly after January 1, 1901, and has since continuously mined coal therefrom to the present time. That J. A. McGuffin died on the 8th day of February, 1908, leaving a legal will, which has been duly probated in Kanawha county, by which will, after certain specific devises and bequests, he devised and bequeathed all of the rest and residue of his estate to his widow, Annette S. McGuffin, who afterwards married Frank Perkins, and that all of the interest of said John A. McGuffin in and under said assignment of January 1, 1901, constitutes a part of said rest and residue of said estate. All of the debts of said John A. McGuffin have been paid, and that if any royalties are due under said assignment of January 1, 1901, for the quarters ending September 30, 1911, December 31, 1911, March 31, 1912, and June 30, 1912, the plaintiff is entitled thereto.

"Eighth. That the Prudence Coal Company was chartered and organized at the instance of John A. McGuffin and solely by his attorneys, and the president and board of directors of such company, were such attorneys, and the assignment of January 1, 1901, from said McGuffin to said company, was drafted by his said attorneys and submitted to and accepted by said company, by its directors, while the directorate consisted of said attorneys only, and before any stock other than that of the original incorporators, who were said attorneys, was issued.

"Ninth. It is further agreed that the plaintiff, Annette S. Perkins, is a citizen and a resident of the state of Ohio, and that the defendant, Prudence Coal Company, is a corporation organized and existing under the laws of the state of West Virginia, and a citizen of such state, and is doing business in Fayette county, West Virginia, in the Southern district of West Virginia."

Upon the introduction of the foregoing documents and the agreed facts the plaintiff rested.

The defendant's contention was that the total cost of coal to the coal company was not to exceed 10 cents per ton and that losses by

reason of payments of minimum were recoverable from the plaintiff. In its account of offsets it claims to have paid more than 10 cents per ton on coal mined from the Jones property as follows:

1907	$ 964 76
1908	847 17
1909	122 01
1910	88 21
1911	678 98
	$2,701 13

Evidence supporting this account was offered by the defendant, but the court, construing the contract as giving the plaintiff a right to 4½ cents per ton on coal mined from the Jones tract and to 4 cents per ton on the coal mined from the other tracts, regardless of the increase of cost to the defendant growing out of its failure to mine as much as the minimum, declined to allow the evidence to come in.

The Jones lease provided for a royalty of 5½ cents per ton, and the other leases for a royalty of 6 cents per ton. If all the leases had provided for a royalty of 6 cents per ton, the contract between McGuffin and the coal company in all reasonable probability would simply have provided for the payment to McGuffin of 4 cents per ton on each ton mined, and in such event the claim of the defendant would have had no foundation. The confused language adopted by the draftsman was doubtless to be explained by the fact above mentioned. There was, however, a way open to the coal company by which it could pay to McGuffin 4½ cents per ton on all coal mined from the Jones land and 4 cents per ton on the remaining coal actually mined, and still pay not exceeding 10 cents per ton on the coal actually mined. The coal company had merely to exercise the foresight and the diligence necessary to mine at least the minimum provided for by the Lyman, Jones, and Firmstone & Johnson leases within the time of grace provided for.

[1] We find it unnecessary to construe the contract between McGuffin and the coal company from the mere face of the paper. The provision for payments to McGuffin "at the same time or times that the original rents or royalties mentioned in said leases, are payable, respectively, to the several lessors therein named," and the total failure to provide for the contingency that has arisen, at least tend to support the conclusion of the court below. But, in any event, the parties have themselves construed the contract in accordance with the plaintiff's contention. Granting that from 1902 to May 1, 1906 (while McGuffin was in charge of the company), the acts of the parties may perhaps not be satisfactorily regarded as a construction of the contract by both sides, their acts from May 1, 1906, until McGuffin's death in 1908 and thereafter until July 1, 1911, must be regarded as a sufficient reason for holding that both parties to the contract have construed it according to the contention of the plaintiff. 9 Cyc. 588; Chicago v. Sheldon, 9 Wall. 50, 54, 19 L. Ed. 594; Insurance Co. v. Dutcher, 95 U. S. 269, 273, 24 L. Ed. 410; Topliff v. Topliff, 122 U. S. 121, 131, 7 Sup. Ct. 1057, 30 L. Ed. 1110; District of Columbia v. Gallaher, 124 U. S. 505, 510, 8 Sup. Ct. 585, 31 L. Ed. 526. It

follows that we find no error in the construction put upon the contract by the trial court.

[2] On the ground that there is no count in the declaration to cover the plaintiff's claim, or on which the bill of particulars could be founded, the defendant moved the trial court to strike out the evidence introduced by the plaintiff and to direct a verdict for the defendant. By statute assumpsit may be maintained on a sealed contract in West Virginia. The contract here had been executed prior to suit by plaintiff's testator, the event on which the payment sued for became due had happened, and as to such claims nothing remained to be done but payment by the defendant. Perkins v. Hart, 11 Wheat. 237, 251, 6 L. Ed. 463; Railroad Co. v. Lafferty, 2 W. Va. 104, 116; Moore v. Wetzell, 18 W. Va. 630, 640; Jackson v. Hough, 38 W. Va. 236, 18 S. E. 575, 576; Empire Co. v. Hull Co., 51 W. Va. 481, 41 S. E. 917, 920; Lord v. McCracken, 65 W. Va. 321, 64 S. E. 134, 135; Shipman, C. L. Pl. (2d Ed.) 22; 3 Standard Proc. 196. It is not an unreasonable inference from the agreed facts that the defendant had, prior to the suit, sold and been paid for the coal mined by it prior to June 30, 1912. The plaintiff's construction of the contract of January 1, 1901, being correct, we do no violence to the language of the fifth count of the declaration in holding that it adequately describes plaintiff's cause of action. To the extent of plaintiff's royalties the defendant had "had and received money for the use of" the plaintiff. Again, the ultimate object of the parties to the contract was that plaintiff's testator should be paid money for coal after it was mined. In this aspect the count for goods sold and delivered is sufficiently descriptive of the cause of action. However, we need not rest our decision here. There could have been no prejudice to the defendant from the trial court's ruling, unless the defendant was surprised. Not only did the bill of particulars filed with the declaration apprise the defendant of the exact nature of plaintiff's claim, but the account filed with the defendant's plea of offsets shows that defendant fully understood the plaintiff's case as it was subsequently set up by the evidence. We have no hesitation in affirming the action of the trial court here complained of.

The judgment below will be affirmed, at the cost of the plaintiff in error.

Affirmed.

(217 Fed. 576)

TUCKER v. BRYAN et al.

In re EAST COAST LUMBER CO.

(Circuit Court of Appeals, Fourth Circuit. February 4, 1913.)

No. 1093.

1. LIENS (§ 16*) — COMMON-LAW LIEN — WAIVER BY CLAIMING STATUTORY LIEN.

By instituting proceedings to claim and perfect a lien given by statute, the claimant waives the right to claim a common-law lien.

[Ed. Note.—For other cases, see Liens, Cent. Dig. §§ 7–16; Dec. Dig. § 16.*]

2. LOGS AND LOGGING (§ 26*)—STATUTORY LIENS—"LABORER."

Persons contracting to log and cut certain timber for a stated price per thousand feet for the lumber produced *held* not "laborers," within the meaning of Code Va. 1904, § 2485, and not entitled to a lien on the lumber thereunder.

[Ed. Note.—For other cases, see Logs and Logging, Cent. Dig. §§ 60–66; Dec. Dig. § 26.*

For other definitions, see Words and Phrases, First and Second Series, Laborer.

Who are entitled to liens or preferences as laborers or employés, see note to Latta v. Lonsdale, 47 C. C. A. 2.]

On Petition to Superintend and Revise, in Matter of Law, Proceedings of the District Court of the United States for the Eastern District of Virginia, at Richmond, in Bankruptcy; Edmund Waddill, Jr., Judge.

In the matter of the East Coast Lumber Company, bankrupt. On petition of L. L. Tucker, as surviving partner of W. L. & L. L. Tucker, against George Bryan, trustee, and John A. Lamb and P. H. C. Cabell, receivers, of said bankrupt, to review and revise an order of the District Court denying petitioners' right to a lien. Affirmed.

The following is the opinion of Snead, Referee:

Pursuant to an order entered in the above-entitled matter upon the 12th day of November, 1910, referring the petition of W. L. & L. L. Tucker to him to consider, your referee in bankruptcy begs to certify:

That upon the 15th day of December, 1910, all parties interested herein appeared before your referee, either in person or by counsel, for the purpose of taking up the question raised in said petition, and, upon the motion of the receivers and trustee, by counsel, to reject said petition, and after hearing argument upon said motion, he entered an order, a copy of which is annexed to the petition hereinafter referred to, refusing said petitioners the right to file their said petition. That thereupon, on the 9th day of January, 1911, said petitioners presented a further petition for a review of said order, which was granted. That the question presented on this review is whether or not petitioners' first petition presented such a cause of action as would entitle them to have the same filed. That petitioners insisted upon taking depositions to show that they were entitled to have their petition filed, but your referee was of opinion that the same showed upon its face that it did not present a good cause of action, and that, therefore, it was not necessary to take any testimony to determine this question.

Said petition sets forth that upon the 23d day of July, 1906, petitioners entered into a contract with the South Atlantic Lumber Company, Incorporated, the name of which company was afterwards changed to that of the East

*For other cases see same topic & § NUMBER in Dec. & Am. Digs. 1907 to date, & Rep'r Indexes

Coast Lumber Corporation, by which they agreed to move their sawmill upon the property of the South Atlantic Lumber Company, Incorporated, and to there log, mill out, and rack certain lumber for the sum of $5.50 per thousand; that they did so log, mill out, and rack 417,800 feet, for which they claim they are due the sum of $2,193.51, with interest from October 4, 1907; that petitioners are entitled to a common-law lien for this amount, and that they are also entitled to, and have perfected, a statutory lien for same, as provided by section 2485 of the Code of Virginia. That it fully appears, from the record in this matter, that petitioners have, as set forth in their said petition, perfected their statutory lien in accordance with sections 2485 and 2486 of the Code of Virginia; but it is contended by counsel for the receivers and trustee, and your referee is of opinion, that petitioners are not entitled to a lien under section 2485 of the Code of Virginia, and that by resorting to this method of collecting their money they have waived their common-law lien, if they ever had one. For authority for the proposition that petitioners have waived their common-law lien, as aforesaid, see Amer. & Eng. Ency. of Law (2d Ed.) p. 32.

Your referee is of opinion that petitioners are not entitled to a statutory lien under section 2485 of the Code of Virginia, because their petition sets forth and shows that they are contractors and not laborers, and laborers and not contractors are the class intended to be protected by this statute. Petitioners contend that they are laborers within the meaning and intent of this statute, but from a careful consideration of the cases construing this and similar statutes your referee is of opinion that they are not. See Vane v. Newcomb, 132 U. S. 220, 10 Sup. Ct. 60, 33 L. Ed. 310, and Frick Co. v. Norfolk & O. V. R. Co. et al., 86 Fed. 725, 32 C. C. A. 31; the latter case construing the statute in question and citing the former, in which was construed a similar statute, which used the word "employé," and in which case the facts were practically the same as those in the Frick Case, as well as those in the one under consideration.

I hand up herewith the petition I refused to allow to be filed, as well as all other papers that have been filed in this matter incident to petitioners' claim. All of which is respectfully submitted for review by the District Court.

The following is the opinion of Waddill, District Judge:

The conclusion reached by the court is that the action of the referee, in deciding adversely to the claim of the petitioners of their right to assert at this time a lien against the fund under the control of the court, either under the statute or at common law, for the amount sought to be recovered by them, as set up in their said petition, is correct, and should be approved.

John A. Coke, Jr., of Richmond, Va. (W. E. Homes, of Boydton, Va., and Coke & Pickrell, of Richmond, Va., on the brief), for petitioner.

John A. Lamb and Henry C. Riely, both of Richmond, Va., for respondents.

Before GOFF and PRITCHARD, Circuit Judges, and McDOWELL, District Judge.

PER CURIAM. Affirmed.

(217 Fed. 736)

INTERNATIONAL HARVESTER CO. OF AMERICA v. CARLSON.

(Circuit Court of Appeals, Eighth Circuit. October 12, 1914.)

No. 4049.

1. BANKRUPTCY (§ 415*) — APPLICATION FOR DISCHARGE — HEARING — LOST RECORD—POWER TO SUPPLY.

Where an order of the bankruptcy court extending the time within which a bankrupt might file exceptions to the report of a special master on objections to the bankrupt's discharge had never been entered of record, and had been lost or destroyed, the court had power to supply the record at a subsequent term.

[Ed. Note.—For other cases, see Bankruptcy, Cent. Dig. §§ 698–708, 719, 723, 724, 726, 728; Dec. Dig. § 415.*]

2. BANKRUPTCY (§ 415*)—APPLICATION FOR DISCHARGE—REFERENCE.

While applications for a discharge may be referred to the referee in bankruptcy to ascertain and report the facts, such reference is not by consent, and the report of the referee is advisory only; it being the court's duty to pass on the issue whether exceptions are filed to the report of the referee or not.

[Ed. Note.—For other cases, see Bankruptcy, Cent. Dig. §§ 698–708, 719, 723, 724, 726, 728; Dec. Dig. § 415.*]

3. BANKRUPTCY (§ 415*)—DISCHARGE—REFERENCE—HEARING.

Under Bankr. Act July 1, 1898, c. 541, § 14, subd. "b," 30 Stat. 550, as amended by Act June 25, 1910, c. 412, § 6, 36 Stat. 839 (Comp. St. 1913, § 9598), imposing the duty of passing on a bankrupt's petition for discharge solely on the district judge, the fact that the judge has sent specifications of objection to a referee for hearing does not absolve him from the duty of passing on the issues raised and exercising an independent judgment.

[Ed. Note.—For other cases, see Bankruptcy, Cent. Dig. §§ 698–708, 719, 723, 724, 726, 728; Dec. Dig. § 415.*]

4. BANKRUPTCY (§ 22*)—PROCEDURE—EQUITY RULES.

General equity rules may be looked to for analogies in the performance of the administrative work of courts of bankruptcy, but cannot be applied in such courts as rules of court.

[Ed. Note.—For other cases, see Bankruptcy, Cent. Dig. § 11; Dec. Dig. § 22.*]

5. BANKRUPTCY (§ 407*) — DISCHARGE — OPPOSITION — GROUNDS — "MATERIAL STATEMENT."

The term "material statement," as used in Bankr. Act 1898, § 14, as amended, providing for refusal of a discharge in case the bankrupt has obtained money or property on credit, on a materially false statement in writing made to obtain credit, means not a blank nor an inference from a blank, but a direct statement, either positive or negative, which is false; and hence a discharge could not be successfully opposed on that ground, because a schedule of liabilities in a financial statement made by the bankrupt in order to obtain credit was left entirely blank.

[Ed. Note.—For other cases, see Bankruptcy, Cent. Dig. §§ 729–731, 737, 738, 740–751, 758, 760, 761; Dec. Dig. § 407.*]

6. BANKRUPTCY (§ 407*) — DISCHARGE — OPPOSITION — FALSE STATEMENT — "FALSE."

After a bankrupt, who was a farmer, had purchased a farm machinery business, an objecting creditor made an agency contract with him, and in connection with the negotiations obtained from him a financial statement. The bankrupt testified that he made a full disclosure to the agent, and that he depended on him to enter the facts on the statement according

*For other cases see same topic & § NUMBER in Dec. & Am. Digs. 1907 to date, & Rep'r Indexes

to such disclosure, and signed the statement without reading it. *Held* that, though the statement was inaccurate, it was not "false," so as to bar the bankrupt's discharge, under the rule that a statement, to be available for this purpose, must be knowingly and intentionally untrue.

[Ed. Note.—For other cases, see Bankruptcy, Cent. Dig. §§ 729–731, 737, 738, 740–751, 758, 760, 761; Dec. Dig. § 407.*

For other definitions, see Words and Phrases, First and Second Series, False.]

Appeal from the District Court of the United States for the Southern District of Iowa; Smith McPherson, Judge.

In the matter of bankruptcy proceedings of George Carlson. From an order overruling objections to the bankrupt's discharge, filed by the International Harvester Company of America, it appeals. Affirmed.

George Wambach, of Des Moines, Iowa, for appellant.

Frank Wisdom, of Bedford, Iowa, for appellee.

Before HOOK and SMITH, Circuit Judges, and AMIDON, District Judge.

AMIDON, District Judge. This is an appeal from an order granting a discharge in bankruptcy. The facts are briefly these:

The bankrupt, George Carlson, had been a farmer all his life prior to the year 1909. In the fall of that year he bought out the farm machinery business of a man by the name of Ledgerwood, of Blockton, Iowa. Ledgerwood had been a local agent of the International Harvester Company. A few days after the sale a general field agent of that company applied to Carlson to continue the agency, and entered into a contract with him to supply him certain farm implements. In connection with these negotiations the agent asked Carlson for a financial statement. This statement was made on a form of the company. Carlson himself knew nothing about commercial business. He answered questions put to him by the agent, and the agent filled out the statement. The agent testified that when it was finished he turned it round to Carlson and said: "There it is just as you gave it to me. He looked at it a moment or two, and then signed it." Carlson testified that he did not read the statement, but that he told the agent fully his financial condition, the amount of his property, and the debts he owed. Carlson afterwards became a voluntary bankrupt, and the International Harvester Company filed objections to his discharge, based upon the above statement, alleging that it contained materially false statements.

The petition for discharge and specification of objections were referred to the referee to take the evidence and make findings of fact and recommendations to the court. Testimony was taken by the referee, and he made his report in writing on the 11th day of March, 1913, recommending that the petition for discharge be denied. On the 17th of April, more than 20 days after the filing of the report, the bankrupt filed his exceptions thereto. On the 2d day of May, 1913, the objecting creditor filed a motion to strike the exceptions upon the ground that the same were not filed within the time required by equity rule 66. This motion and the matter of the bankrupt's discharge were brought on for hearing before the court on the 22d day of August, 1913. The court

*For other cases see same topic & § NUMBER in Dec. & Am. Digs. 1907 to date, & Rep'r Indexes

made an order on that day denying the motion and sustaining the exceptions, and reciting in the body of the order that "the court had extended the time to said bankrupt in which to file his exceptions." The order also granted the bankrupt his discharge. At the time this order was made there was nothing of record showing that the time for filing exceptions to the referee's report had been extended. The present appeal was perfected on the 26th of August, 1913. November 5, 1913, the court, on motion of bankrupt's attorney, and without notice to the objecting creditor, made a nunc pro tunc order reciting that the same was based on personal knowledge of the judge, as follows:

"It is hereby ordered this day, as of date March 22, A. D. 1913, that said George Carlson have until April 16, A. D. 1913, within which time to make and file his exceptions to the report of H. H. Whitaker, special master, upon the application of said bankrupt for his discharge for the reason that such order was in fact made on the 22d day of March, 1913, in writing, but not reduced to record. This order is now granted for the purpose of showing the true facts of the case."

By a supplementary record this order and the facts relevant thereto were brought before this court.

This order was made at a term subsequent to the term at which the order which it purports to supply was entered.

[1] It is first objected that the trial court had no power to make the order of November 5, 1913. In the motion it was pointed out that the original order had never been entered of record and had been lost or mislaid. We think the court had power to supply this record at a subsequent term. Its authority to do so is supported by decisions of the Supreme Court and of this court. In re Wight, 134 U. S. 136, 10 Sup. Ct. 487, 33 L. Ed. 865; Groton Bridge & Mfg. Co. v. Clark Press Brick Co., 136 Fed. 27, 68 C. C. A. 577; In re Welty (D. C.) 123 Fed. 122.

[2-4] We do not consider the making of this order as at all important, however. The bankruptcy law (section 14, subdivision "b") imposes the duty of passing upon a bankrupt's petition for discharge solely upon the district judge. Subdivision 3 of rule 12 of the Supreme Court to carry the bankruptcy act into effect emphasizes this duty. Referees in bankruptcy have no power to hear such petitions. Such an application may be referred to the referee "to ascertain and report the facts." Such a reference, however, is not by consent, and the report of the referee can be treated as advisory only. Kimberly v. Arms, 129 U. S. 512, 9 Sup. Ct. 277, 32 L. Ed. 695; Davis v. Schwartz, 155 U. S. 631, 15 Sup. Ct. 237, 39 L. Ed. 289; In re Holden, 203 Fed. 229, 121 C. C. A. 435; In re Swift (D. C.) 118 Fed. 348. The duty of the court to pass upon the issue cannot be shifted by such a reference, nor can the duty of the court be dependent upon the filing of exceptions. Orderly practice would require that such exceptions be filed, but the omission to do so is not jurisdictional. When the question of the discharge is brought before the District Court the issue is made up of the specifications of objection to the discharge, and the bankrupt's answer thereto, and not by the report of the referee and exceptions thereto. We are of the opinion, therefore, that it was the duty of the District Judge to hear the cause and exercise an independent judgment thereon. When the referee's report was brought to his notice, he was then,

for the first time, called upon to perform his duty of deciding whether the petition for discharge should be granted or denied. If the filing of exceptions to the master's report would aid him in the performance of this duty, he had ample authority to require such exceptions to be filed, or to consider such exceptions though they were filed late. Counsel for the objecting creditor insists that rule 37 of the bankruptcy rules makes the general equity rules prescribed by the Supreme Court applicable to proceedings in bankruptcy, and that by equity rule 66 (198 Fed. xxxvii, 115 C. C. A. xxxvii) the time for filing exceptions to the report of masters is fixed at 20 days. We do not think that the general equity rules can be applied as rules of court in the performance of the administrative work of courts of bankruptcy. They may be looked to for analogies, but not as rules. The Supreme Court itself has fixed the rules to govern courts of bankruptcy. To hold that the District Court was bound by the report of the referee, because exceptions were not filed within 20 days, would deprive that court of its duty both under the bankruptcy law and the rules of the Supreme Court to pass upon the question of the bankrupt's right to his discharge.

[5] Coming to the merits of the case, we are clearly of the opinion that the decision of the District Court granting the bankrupt his discharge was right. The evidence fails to show that bankrupt made "a false statement in writing." His financial statement under the head of "Assets" states that his stock of goods is worth $1,000, and that he had cattle, hogs, horses, and implements on the farm of the value of $2,500. Under the heading of "business liability" there are numerous subheads such as, "Owing for Merchandise, Notes or Accounts Past Due," "Owing to Banks," "Borrowed Money Other than Bank," "Taxes, Rent, or Other Bills Payable," etc. Opposite these various items is a column for the insertion of the proper amount. This schedule of liabilities is left entirely blank in the statement, and it seems to be contended that because of these blanks the bankrupt states that he owed nothing that could properly come under either of these heads; whereas, in fact, the evidence shows that he was indebted in considerable sums under each head. We do not think that an omission constitutes a "material statement," within the meaning of section 14 of the Bankruptcy Act. There is nothing in any other part of the form which declares that blanks unfilled are to be construed as representing that nothing is owing under the heading. A "material statement" means not a blank, nor an inference from a blank. There must be a direct statement, either negative or positive, which is false, to justify the denial of the bankrupt's discharge.

[6] Again, even adopting the theory of appellant, the statement was not "false." The bankrupt testifies that he made a full disclosure to the objecting creditor's agent, and depended upon that agent to enter the facts according to such disclosure. The bankrupt signed the statement without reading it, and probably without being able to understand its provisions. To be a ground for denying the discharge the written statement must be knowingly and intentionally untrue. Gilpin v. Merchants' National Bank, 165 Fed. 607, 91 C. C. A. 445, 20 L. R. A. (N. S.) 1023. We do not mean by this that a person who makes a statement in writing for the purpose of obtaining credit shall not be held

responsible for such statement. In such a case negligence easily passes over into fraud. The maker of the statement is bound to know that it will be relied upon and bound to exercise an honest judgment to state his business condition truthfully. But if he is misled into signing an untrue statement by the creditor's own agent, in whom he had a right to rely, the statement is not "false" within the meaning of the statute. Furthermore, to allow the creditor to use such a statement to defeat a bankrupt's discharge would permit it to take advantage of its own wrong.

The decree of the trial court is affirmed.

(217 Fed. 740)

LUXURY FRUIT CO. et al. v. HARRIS.

(Circuit Court of Appeals, Fifth Circuit. October 17, 1914.)

No. 2645.

BANKRUPTCY (§ 48*)—POWER OF COURT—UNAUTHORIZED COMPOSITION.

Orders made by a court of bankruptcy in proceedings against a bankrupt corporation, without notice to the corporation or its creditors, or their consent, directing that, on payment into court by a stranger to the proceedings of a sum named, to be used in payment of the claims of unsecured creditors which had been proved up to that time, and costs and fees, the proceedings should stand dismissed and the trustee discharged, and the person making such payment should be subrogated to the rights of the creditors paid, *held* without authority.

[Ed. Note.—For other cases, see Bankruptcy, Cent. Dig. § 47; Dec. Dig. § 48.*]

Petition to Superintend and Revise from the District Court of the United States for the Southern District of Georgia; Wm. B. Sheppard, Judge.

In the matter of the Luxury Fruit Company, bankrupt. On petition by W. C. Wright, trustee, to revise orders of the District Court in favor of William Henry Harris. Reversed.

The Luxury Fruit Company was adjudged a voluntary bankrupt March 31, 1914. A receiver was appointed for its estate, which consisted principally of a peach orchard, upon which the crop was rapidly maturing. A meeting of creditors was had, and a trustee elected. The respondent Harris had been a tenant of the bankrupt and while in possession as tenant of the company's property had undertaken to have the property sold and himself become the purchaser. This sale was attacked as fraudulent by the company. Harris interfered with the trustee in his management of the property to such an extent that the trustee brought a rule for contempt against him. This was heard before Hon. William B. Sheppard, judge presiding, and an order was passed enjoining Harris from interfering with the trustee, and directing the trustee to file a plenary suit against Harris to remove the cloud upon the title to the property of the bankrupt in his possession. This plenary suit in equity was filed within the time fixed by the order.

Harris applied to the court for a modification of the order passed on the rule for contempt, praying that he should be authorized to give bond in the sum of $5,000, and the property should be turned over to him pending the trial of the plenary suit. At the same time the First National Bank of Fort Valley, claiming to be a secured creditor and to hold certain of the stock of the company as collateral, filed a petition attacking the adjudication in bankruptcy and praying the court to vacate the order adjudging the company a

*For other cases see same topic & § NUMBER in Dec. & Am. Digs. 1907 to date, & Rep'r Indexes

bankrupt, and the election of a trustee, and to dismiss the proceedings. In this petition the bank offered to pay certain of the unsecured debts scheduled by the bankrupt and to satisfy another debt by the surrender of a note which it claimed to hold against the creditor. It made no offer to pay the expenses or costs of the bankruptcy proceeding. A hearing was had, and the court passed an order, April 25th, as follows:

"In the United States District Court for the Southern District of Georgia.
"In the Matter of Luxury Fruit Company, Bankrupt.
"Petition of First National Bank of Fort Valley.

"This cause coming on to be heard upon the petition of the First National Bank of Fort Valley, Ga., a stockholder in said Luxury Fruit Company, alleged bankrupt, and it appearing from the record that the adjudication was made upon a petition which did not disclose that said petitioner was a corporation or individuals, or that the petition was duly authorized by said corporation, and upon consideration thereof, it is ordered that said petitioner have ten days from date hereof to amend said petition as it may be advised, and upon failure to amend in said time said petition shall stand dismissed and the adjudication thereon revoked.

"And it further appearing to the court that an offer of compromise is made by W. H. Harris to pay all unsecured creditors in full of all claims and demands and costs of administration, except attorney's fees, it is further ordered that the referee, upon deposit by said Harris of a sum in cash sufficient to pay all unsecured claims against said estate, and the costs of administration to the date of said compromise, the said referee shall give ten days' notice to said creditors of said compromise offer, and upon said meeting being held after said notice and acceptance, the referee is directed to pay to said unsecured creditors the amounts of their claims and the costs of administration as provided by law, which said payments shall subrogate said Harris to all the rights and claims of said unsecured creditors against said bankrupt, whereupon the petition in bankruptcy shall be dismissed.

"It is further ordered that the restraining order heretofore granted be and the same is hereby continued in full force and effect until the provisions of this order are fully determined and carried out, but that said W. C. Wright, trustee be and he is hereby directed to enter into bond to Wm. H. Harris in the sum of $12,000, conditioned as trustee of said estate, to indemnify said Harris against all damage which he may sustain by reason of the issuance of this injunction and any misconduct of said Wright, as trustee, under and through said restraining order.

"It is further ordered and adjudged that this order shall not prejudice the Luxury Fruit Company in any right of action commenced or to be instituted by it to set aside and vacate the title to said property acquired by Harris under and by virtue of any foreclosure proceedings instituted by him.

"Ordered and adjudged this the 25th day of April, A. D. 1914.
"Wm. B. Sheppard, Judge."

Within the time provided by the order the bankrupt amended the original bankruptcy petition, so as to meet the objections raised by the petition of the First National Bank, and this amendment was allowed. The trustee also filed the bond, conditioned as provided in the order, with surety, which was approved. No deposit was made by Harris and no notice given to creditors. On May 4th, without any additional pleadings being filed, and without notice to parties or creditors, the judge, apparently on his own motion, passed an order as follows:

"In the United States District Court for the Northern District of Florida.
"In the Matter of Luxury Fruit Company, Bankrupt.
"Wm. C. Wright, Trustee, v. William Henry Harris.

"This cause coming on to be further heard and considered upon the application of William Henry Harris for a compromise in the said cause, it is ordered that, upon a deposit with the referee of this court by the said Harris of the sum of sixteen hundred seventy-one dollars and ninety cents ($1,671.90)

to cover the amount of unsecured claims proved against said estate of said alleged bankrupt, and the further sum of two thousand five hundred dollars ($2,500.00) as a deposit to cover the reasonable cost of administration hereafter to be heard and determined, and to be fixed as the court may be advised, the reasonable commissions to be allowed the trustee, as well as actual operating expenses to be proved, together with a reasonable attorney's fee, including the costs and commissions of the referee and clerk to be hereafter ascertained and allowed, and upon the above provisions being carried out the trustee herein shall stand discharged and the petition dismissed.

"Done and ordered this the 4th day of May, A. D. 1914.

"Wm. B. Sheppard, Judge."

This petition seeks to superintend and revise the orders of April 25 and May 4, 1914.

The Errors Assigned.

Briefly stated, the 21 assignments of error may be summarized as follows:

First. The order of April 25th is contrary to the Bankruptcy Act and the practice prescribed in bankruptcy cases, and is erroneous:

(a) Because it provided for an irregular composition, not in accordance with the statute, in that the composition was to be made by a third party, not even a creditor, and not by the bankrupt; the bankrupt alone being authorized to submit an offer of composition.

(b) Because no offer of composition or compromise was submitted by Harris, the only offer being by the First National Bank, and that upon entirely different terms from those provided in the order.

(c) Because the compromise was for the benefit of Harris, who was not even a creditor, but with whom the trustee was litigating the title to certain property of the bankrupt without regard to the rights or interest of the bankrupt or any of its creditors.

(d) Because said order provided for the subrogation of Harris to the rights of the creditors whose claims he should take up, without regard to the rights or interest of the bankrupt or of the creditors; no such subrogation being authorized by the Bankruptcy Act.

(e) Because said order wholly disregarded the rights of the secured creditors or of any unsecured creditors who might thereafter prove their claims within the time allowed by law.

(f) Because the procedure provided in the order is wholly unauthorized by the Bankruptcy Act and the general orders promulgated by the Supreme Court.

(g) Because said order, in so far as the same required the giving of a bond by the trustee, is entirely unauthorized by law; the trustee having been directed to bring a plenary suit to cancel a cloud upon the title to the property of the bankrupt in his possession.

(h) Because said order was not in any particular authorized by the pleadings.

Second. The order of May 4th was erroneous:

(a) Because it provided for an unauthorized compromise by a person not a party to the record, save as a defendant in a rule for contempt.

(b) Because there were no pleadings whatever to support said order.

(c) Because the order was passed without regard to the wishes, rights, or interest of the bankrupt or any of its creditors, secured or unsecured.

(d) Because the sums fixed by the court, upon the payment of which the bankruptcy petition was ordered dismissed, were wholly insufficient to pay the unsecured claims and the costs and expenses of the bankruptcy administration.

(e) Because said order provided for the dismissal of the petition and the discharge of the trustee without notice to creditors; such notice being expressly required by sections 58 and 59g of the Bankruptcy Act.

(f) Because the procedure provided in said order is wholly contrary to the provisions and requirements of the Bankruptcy Act.

Orville A. Park and Geo. S. Jones, both of Macon, Ga., for petitioners.

John R. L. Smith, of Macon, Ga., opposed.

Before PARDEE, Circuit Judge, and GRUBB and CALL, District Judges.

PER CURIAM. The orders we are called upon to review were intended apparently to effect a compromise by which the real estate scheduled by the bankrupt corporation would be delivered to the claimant, Harris, upon his paying the costs of court, including the costs of administration by the trustee and attorney's fees, and providing for the payment of unsecured creditors who up to that time had proved their claims, and to result in a discontinuance of the bankrupt proceedings.

The order of April 25th provided that the offer of Harris to pay all unsecured creditors and costs of court and costs of administration, except attorney's fees, should be referred for consideration and acceptance to a meeting of creditors after ten days' notice, which looks somewhat to the composition which is provided for in the Bankruptcy Act; but the subsequent order of May 4th practically vacates the order of April 25th in this respect, dispensing with the creditors' meeting and providing that on compliance by Harris in making deposits to the amount of $4,171.90 the trustee shall stand discharged, and the petition in bankruptcy be dismissed. From our examination of the case, we find no law or authority for either one of the orders. Each seems to be amenable to nearly all the objections urged in the assignment of errors.

It is therefore ordered that the petition to superintend and revise herein be granted, and that the orders of April 25, 1914, and May 4, 1914, in the court below, be reversed; costs to be paid by the respondent.

(217 Fed. 743)

In re DI COLA.

(Circuit Court of Appeals, Third Circuit. November 10, 1914.)

No. 1860.

BANKRUPTCY (§ 272*)—TRUSTEE—SETTLEMENT OF ACCOUNTS.

A trustee in bankruptcy and his counsel, after a successful prosecution of the bankrupt and others for concealing property of the estate, made a settlement by which the defendants restored the property and also paid a sum in cash to be used in paying the cost of the criminal case, including attorney's fees and also the expenses of administration of the estate, and the money was so used by the attorneys with the knowledge of the creditors. *Held* that, while such money belonged to the estate, to be held and accounted for by the trustee as other property, it was within the discretion of the court to refuse to surcharge his account further than to deny him credit for any part of the expenses of administration.

[Ed. Note.—For other cases, see Bankruptcy, Cent. Dig. §§ 572, 573; Dec. Dig. § 272.*]

Petition for Revision of Proceedings of the District Court of the United States for the Western District of Pennsylvania, in Bankruptcy; James S. Young, Judge.

In the matter of Vincent Di Cola, bankrupt. On petition to revise an order settling the accounts of the trustee. Affirmed.

---

*For other cases see same topic & § NUMBER in Dec. & Am. Digs. 1907 to date, & Rep'r Indexes

Albert Y. Smith, of Pittsburgh, Pa., for petitioner.

Edw. Y. Breck, of Pittsburgh, Pa., for excepting creditors.

Before BUFFINGTON, McPHERSON, and WOOLLEY, Circuit Judges.

J. B. McPHERSON, Circuit Judge. This is a petition to revise an order made by the late Judge Young in the District Court for the Western District of Pennsylvania, distributing a fund in bankruptcy. The facts upon which the order is based are found by the learned judge, and in this proceeding are to be taken as true. His opinion—which has not been reported—is as follows:

This case comes before us upon the report of the referee and exceptions thereto by the creditors and by the trustee. The history of this bankruptcy proceeding is necessary to an understanding of the case.

The trustee, having received information that Di Cola, the bankrupt, had concealed his assets, the trustee, through his attorneys, brought prosecutions against Di Cola and his confederates, Ciauri and Blandi, in the court of quarter sessions of the county of Allegheny, in this district, and they were found guilty. Thereupon the defendants, on March 8, 1911, delivered to H. E. Brooks, Jr., the trustee in bankruptcy, and to John N. Piatt, his attorney, certain goods and merchandise and the sum of $2,500 in cash, this delivery being evidenced by the following writing:

"We, H. E. Brooks, Jr., trustee in bankruptcy of the estate of Vincent Di Cola, and John N. Piatt, attorney, do hereby certify and declare that we have this day received bill of sale from Giacomo Blandi, A. Morturano Blandi, and Vincenzo Ciauri for the goods, wares, merchandise, etc., contained in the store rooms and buildings situate at No. 401 and 403½ Larimer avenue, and at the corner of Laurel and Edmund streets, Pittsburgh, Pa., and of the goods held in storage in the Steubenville Transfer & Storage Company, in the name of G. Blandi, together with the sum of twenty-five hundred dollars ($2,500.00) in cash, to be returned, however, to the said Giacomo Blandi, A. Morturano Blandi, and Vincenzo Ciauri, in the event of the court of quarter sessions of Allegheny county in certain proceedings therein pending between the commonwealth of Pennsylvania and Vincent Di Cola et al., refusing or failing to suspend sentence of imprisonment upon the above-named parties, upon payment of costs. H. E. Brooks, Trustee.

"John N. Piatt, Attorney.

"Witness: William A. Jordan,
"March 8, 1911."

The purpose of this transaction is shown by the evidence to have been to induce the creditors to consent to leniency being extended to the defendants by the court of quarter sessions. The defendants were treated by the court with such leniency that the trustee and his attorneys were allowed to retain the goods and money. It appears from the evidence that the $2,500 (to be exact, $2,495) was received by Piatt, attorney for the trustee, who did not pay it over to the trustee, but deposited it to his own account and distributed it by paying to the trustee $500 thereof, and the balance to certain expenses to detectives, witnesses and others, including the counsel fees to himself and associate in the criminal proceeding. This conduct on the part of Piatt and the trustee presents an unusual and, we hope, a very rare state of affairs in the administration of bankrupts' estates.

Let us clearly state at the outset that the trustee owed the duty to the creditors of securing for them the assets of the bankrupt. It was his duty to investigate, to find and secure the assets, and to use the law to aid him. He was authorized to and did employ attorneys to advise and assist him in the performance of his duties, and these attorneys owed to him and to the court of which they were officers the duty of advising and assisting him in securing the assets. The duty of each was plain. The trustee and his counsel evidently misunderstood their relation to the bankruptcy case, and when the

settlement after conviction of the criminal case was proposed, they undoubtedly regarded the settlement as to the $2,500 as having nothing to do with the bankruptcy proceeding, for they submitted to the creditors the proposition of settlement, fully informed them that the goods surrendered were to go to the trustee for sale and the fund arising therefrom to be distributed by the trustee to the creditors, and the $2,500 to be used for the expenses of the criminal proceeding, including the attorney's fees of Piatt and his associate, Stein, and the expenses of the administration of the bankrupt's estate, so that the proceeds of the stock of goods surrendered might go to the creditors free of the expenses of administration. The evidence shows that not only was this all represented to the creditors, but to the court of quarter sessions when the defendants were called for sentence. The evidence before the referee clearly shows this, and also that that was still their belief at the time of the hearing before the referee. We may conclude, therefore, that the creditors, the trustee, and the counsel for the trustee had the erroneous belief that they might receive the $2,500 from the defendants, consider it as a fund separate from the estate, and apply it to the expenses of prosecution and to the expense of administering the general estate of the bankrupt without bringing it into court as part of the estate, where the expenses might have been investigated and paid. How they could have had such a belief is difficult to understand, when we consider that the trustee—in unearthing the concealed goods, in his investigation thereof, in his efforts to punish the fraudulent debtor and his associates for the concealment of the goods, in his negotiations for the settlement and leniency with the defendants—was acting as the representative of the estate, and was using all the weight that he had as such representative and of the creditors back of him in the prosecution and subsequent efforts at settlement. The receipt of the trustee and his attorney makes no distinction between the goods surrendered and the cash. Fairly considered, why should a part of the consideration, to wit, the goods, be regarded as belonging to the estate, and the other part, to wit, the money, $2,500, be not so regarded? The evidence clearly shows that the creditors, the trustee, and attorneys for the trustee had the erroneous belief that assets belonging to the estate could be partly distributed by the consent of the creditors. The assets of the bankrupt, from whatever source derived, belong to the estate, must be collected by the trustee for the estate and accounted for by him to the court. The $2,500 cash was part of the estate clearly to be accounted for by the trustee, and primarily liable for expenses, those expenses to be determined upon a proper hearing after the money had been accounted for and the expenses passed upon. This court unqualifiedly condemns any attempt on the part of the receivers, creditors, or attorneys in a bankruptcy proceeding to dispose of any part of the bankrupt estate except in the manner prescribed by the Bankruptcy Act, and that is by bringing into the hands of the officers having charge of the estate all the assets thereof, by the filing of accounts showing on the one side the money received and on the other the credit claimed.

While the referee was of opinion that this money was part of the bankrupt estate, he refused to surcharge the trustee with it because it did not come into his hands, but was received and distributed by Piatt in paying the expenses of the criminal case. We cannot escape from the conclusion that the trustee ought not to be surcharged with this sum. It is true he was negligent in not commencing appropriate proceedings to recover the money from his attorney. He was probably placed in a position where he did not realize his duty in this respect. His attorneys, and the creditors, as shown by the evidence, as we have found, both seem to have regarded the $2,500 paid by the defendants in settlement of the criminal cases as a fund to be used in paying the expenses of those cases and of the administration of the estate, so that the money realized from the sale of the bankrupt's assets would be undiminished by any costs of administration such as trustee's commission and attorney's fees. We can well understand that a trustee placed in this position would not be vigilant to see that the money passed through his hands, but would allow the money to be used for the purpose for which his attorneys, with the knowledge of the creditors, intended to use it. The attorney for the trustee should have paid over to the trustee the $2,500, and it should

have been accounted for by the trustee, and the expenses and attorney's fees claimed as a credit to be passed upon by the court. Unfortunately, by the conduct of Piatt in keeping this money and distributing it, this court is prevented from administering that part of the estate at this time. The attorneys for the trustee, the trustee himself, and the creditors, having, as we have seen, erroneously treated the $2,500 as a fund to be used in paying the expenses of the criminal proceeding and the general expenses of administration, and the trustee by not compelling Piatt to deliver the $2,500 to him, and Piatt by not delivering the money to the trustee, having made it impossible to make that sum a part of the estate, we must, for the purposes of this case, consider whether or not the trustee has claimed credit in his account for expenses that should have been paid out of this fund of $2,500. Let us examine the evidence and see what expenses were to be paid out of this fund.

Stein, on page 4 of the testimony, says: "Many offers of settlement were made, the result of which was that all the creditors were called to my office on April 5th. There were probably 30 creditors present in person or by counsel, and it was explained to them that the bankrupt was willing to turn over all the goods that we claimed had been fraudulently moved, and would also pay the sum of $2,500 in cash to be used in defraying all the expenses the creditors had been put to, so that the goods, when sold, would go to the creditors without any deductions whatsoever."

And again, on page 186: "After the receipt of the money, it was fully explained in my presence at several meetings of the creditors in my office that this money was to be used, in case of a light or suspended sentence on the defendants, to pay all the expenses connected with the criminal proceedings for which the trustee had obligated himself to pay; and in addition to paying all such expenses, the trustee also was to pay all the expenses connected with the bankruptcy proceedings, and every other item of expense connected with all the cases."

Piatt, on page 160, testifies: "The idea was to execute a receipt acknowledging that the three stores' contents, and the goods of Steubenville were to be held by Brooks in escrow, pending the prosecution of the criminal charges in criminal court, and the $2,495 was placed in my hands to pay the fees of the attorneys in the criminal proceedings, and also in the bankruptcy proceedings and cover all the costs of the estate."

Mr. Rodgers, an attorney for a creditor, on page 146, testifies: "We finally signed it on the representations made by Mr. Brooks and by his counsel to us all there that he had $5,300 for distribution to the creditors of the estate; that the entire expenses were to be paid out of a fund of $2,500 which had been raised by the defendants in the criminal prosecution and paid in addition for that purpose."

It is thus conclusively shown that all the expenses of the administration were to be paid from this fund. The creditors had contributed $945 to be used in the prosecution, and that and the $2,500, a fund of $3,445, was in the hands of the trustee and attorneys to pay all the expenses.

We now turn to the account of the trustee to determine whether or not credits are claimed for expenses that should have been paid from the $2,500, and we find that the trustee has claimed credit for $2,610.39 for expenses of administration. The trustee and his attorneys having undertaken to pay those expenses out of the $2,500 received from the bankrupt, they should be held to that and no expenses should be charged against the estate, so that the fund of $4,376 shown on the debit side of the account may go to the creditors undiminished by expenses.

As this will result in the trustee being surcharged with all those expenses, $2,610.39, he is entitled to have returned to him by his attorneys two-thirds of the $2,610.39, less $500 already received by him from Piatt, and the sum of $1,024.51 disallowed by the referee, or the sum of $723.92. That there will be no hesitation on the part of the attorneys to make this payment, we conclude from the testimony of Mr. Stein, who, on page 187, testified: "I want it distinctly understood that the fee to myself, Mr. Piatt, and Mr. Brooks was to be one-third of whatever would be remaining after all the administration expenses were paid. If Mr. Brooks proves that he has any additional expenses, I want it understood that Mr. Piatt and I pay two-thirds of it."

The trustee must be surcharged with all the items on the credit side of his account, leaving the balance for distribution, the amount shown on the debit side of his account, namely, $4,376.

We are not to be understood as giving countenance to the practice exemplified by this case of allowing any portion of the estate to be administered except in the way prescribed by the Bankruptcy Act, and that is by accounting for all the assets on the one side and the expenses on the other, and it is only because the trustee and his attorneys, with the consent of the creditors, have put the case in the present condition that, in order to do equity among all the persons interested, we have disposed of the case in accordance with the plan adopted by the parties as shown by the evidence.

Distribution was thereupon directed, and the controversy has now been brought to this court by the petition under consideration.

Upon the foregoing facts, we find no error that needs correction, and accordingly the order is affirmed.

(217 Fed. 747)

NEW YORK & PHILADELPHIA COAL & COKE CO. v. MEYERSDALE COAL CO.

(Circuit Court of Appeals, Third Circuit. November 10, 1914.)

No. 1878.

1. CORPORATIONS (§ 433*)—CONTRACTS—AUTHORITY OF OFFICER.

Where correspondence relating to a contract for the sale of coal was signed in the name of a coal company by its secretary, who was also described on the letter head as treasurer and general manager, such evidence was sufficient to take the question of his authority to make the contract on behalf of the company to the jury in an action for its breach.

[Ed. Note.—For other cases, see Corporations, Cent. Dig. §§ 1706, 1719, 1738, 1744; Dec. Dig. § 433.*]

2. SALES (§ 32*)—OFFERS AND ACCEPTANCE BY CORRESPONDENCE—REQUISITES AND VALIDITY.

Correspondence between a coal company and a prospective customer, which showed a complete meeting of minds upon all of the terms of a contract for the future delivery of coal, *held* to constitute a binding contract, although a formal contract embodying such terms, submitted by the purchaser, was not executed by the seller.

[Ed. Note.—For other cases, see Sales, Cent. Dig. § 59; Dec. Dig. § 32.*]

In Error to the District Court of the United States for the Western District of Pennsylvania; Charles P. Orr, Judge.

Action at law by the New York & Philadelphia Coal & Coke Company against the Meyersdale Coal Company. Judgment for defendant, and plaintiff brings error. Reversed.

Henry W. Hardon, of New York City, for plaintiff in error.

E. C. Higbee and Sterling, Higbee & Matthews, all of Uniontown, Pa., for defendant in error.

Before BUFFINGTON, McPHERSON, and WOOLLEY, Circuit Judges.

J. B. McPHERSON, Circuit Judge. The plaintiff in this suit, a New Jersey corporation doing business in New York City, is seeking to re-

*For other cases see same topic & § NUMBER in Dec. & Am. Digs. 1907 to date, & Rep'r Indexes

cover damages from the Meyersdale Coal Company, a Pennsylvania corporation mining bituminous coal in the western part of the state. The statement of claim asserts that a contract to deliver coal was made by correspondence in August, 1912, while the principal defense is a denial of the contract. The trial judge sustained the defense and entered a compulsory nonsuit, refusing a subsequent motion to set it aside. Under the Pennsylvania practice such a motion is necessary before a writ of error can be taken.

The facts are as follows:

Early in August, 1912, a representative of the plaintiff called upon the defendant in Pennsylvania, and had some conversation concerning a proposed contract for the sale of coal. On August 9th the defendant wrote the following letter:

"Meyersdale, Pa., Aug. 9, 1912.

"New York & Phila. Coal & Coke Co., Produce Exchange Building, New York, N. Y.—Gentlemen:

"We had a very pleasant call this morning from your representative, Mr. Burrows, and made him a quotation on contract for deliveries to run to April 1, 1913, at $1 per gross ton, f. o. b. cars our mine, on our Stauffer No. 1 coal. This to be shipped at the rate of from 2,000 to 2,500 tons per month.

"Trusting that this quotation will meet with your approval, and that we will be favored with your order, which will receive our prompt and careful attention, we are,

"Very truly, Meyersdale Coal Co.,
"W. T. Hoblitzell, Secretary."

To this letter the plaintiff replied on August 13th:

"Your letter of the 9th instant was duly received by us, and we note its contents.

"We have to-day taken the matter up with our Mr. Burrows, and have decided to accept your offer for 2,500 tons per month of your Stauffer No. 1 coal from August 15, 1912, to March 31, 1913, at the price of $1.00 per ton of 2,240 lbs. f. o. b. cars at the mine. You can commence shipment on this contract on Thursday next, the 15th instant, which will mean that for the last half of August you will have to send us 1,250 tons. Please, until further notice, consign the coal to us at the St. George coal piers, Staten Island, N. Y. You understand that we wish the monthly shipment spread over each month, and by that we mean not to ship any large amount on one day and then not ship any more for a long time. We will in the course of a few days make up the form of contract covering this purchase, and send it to you, and in the meantime this letter will be sufficient authority for you to go ahead with shipments.

"Please do not forget that when our Mr. Burrows was at your Stauffer mine on Friday last he saw that the coal was by no means as clean as it should be, and so reported it to your Mr. W. T. Hoblitzell, and he promised that he would do his utmost to have the coal made cleaner, which we trust will be done, as dirty coal is of no use in our business."

On August 16th the plaintiff wrote again, saying:

"We wrote you last on the 13th instant, and have not since received any of your esteemed favors.

"We herewith hand you the contract for the 18,750 tons of Stauffer No. 1 coal that we have bought from you, and will be glad if you will sign it and return one of the copies to us. We have made this contract to read the same as our contracts with others, and we have no doubt you will find it satisfactory."

In this letter of August 16th the following writing was inclosed:

"This contract made this thirteenth day of August, 1912, by and between the Meyersdale Coal Company, of Meyersdale, Pa., hereinafter called the seller, and the New York and Philadelphia Coal and Coke Company, of New York, N. Y., hereinafter called the buyer. The seller agrees to sell, and the buyer agrees to buy, 18,750 tons, of 2,240 pounds, of Stauffer No. 1 bituminous coal from the seller's mine at Listie, Pa., for 7½ months, beginning on August 15 or 16, 1912, and ending on March 31, 1913, on the following terms and conditions:

"Price to be $1 per ton of 2,240 pounds free on board cars at the mine.

"The seller is to deliver and the buyer is to take 2,500 tons of 2,240 pounds monthly during the term of this contract, excepting during the last half of August, 1912, during which period the seller is to deliver and the buyer is to take 1,250 tons of 2,240 pounds.

"Payments are to be made by the buyer mailing its check to the seller at Meyersdale, Pa., not later than the 20th day of each month for all the coal shipped it from the mine during the previous month.

"Railroad weights are to govern all payments.

"The seller agrees to do its utmost to keep all the coal delivered to the buyer under this contract as clean as possible.

"It is hereby agreed that if the seller should at any time during the life of this contract desire to directly or indirectly sell, lease, transfer, or in any other way dispose of its Stauffer mine at Listie, Pa., or the coal therein, it can only do so provided it can make arrangements for this contract to be carried out in all its terms and conditions to its end on the 31st day of March, 1913.

"The parties to this contract are not to be held responsible for failure to deliver or receive the coal in case of strikes or accidents, failure or delay of transportation facilities, or other causes beyond their control, both at the mine, and at tidewater or other places.

"Accepted: Accepted:

.....

"New York & Philadelphia Coal & Coke Co.,
"[Signed] Robt. H. Burrows, Treasurer."

It will be observed that certain terms are proposed by this writing that had not yet appeared in the correspondence, and accordingly the letter and the writing taken together must be regarded as a new offer. With the exception of one term, the defendant accepted this offer on August 19th in the following letter:

"Your favor of August 16th received, with contract inclosed. In reply we note that you have made this contract to read as from August 15th. Owing to the shortage of cars that we have had during August and on account of some orders that we have had on hand, it is necessary for us to ask that you make this contract to read from September 1st, at a monthly rate of 2,500 tons to March 31st, 1913.

"If it is at all possible for us to do so, we will make up the tonnage as from August 15th, but do not want to bind ourselves up for any shipments before September 1st, as it is going to take us until that time to clean up orders that we have on hand.

"Kindly advise if this will be satisfactory.

"Very truly, Meyersdale Coal Co.,
"W. T. Hoblitzell, Secretary."

On August 20th the plaintiff agreed to the proposed change of date from August 15th to September 1st, saying:

"We have your letter of yesterday and note its contents. It is quite agreeable to us to make the contract to read from September 1, 1912, at the monthly delivery of 2,500 tons to March 31, 1913, as you request. We now therefore hand you the contract drawn up covering this period of seven months,

and ask that you will kindly sign the same and return one copy to us, and also please return us the two other forms that we sent you.

"If you will find it convenient to send us any of your Stauffer coal during the balance of this month at the price of $1 per ton of 2,240 pounds f. o. b. cars at the mine, you can do so as a separate deal from the contract, and you can send it to St. George coal piers, N. Y.

"Did you receive our letter of the 13th of this month, as we have had no acknowledgment of it from you."

The price of coal began to rise early in September, and (whether for this or for some other reason) the defendant made no deliveries. On February 15, 1913, the plaintiff brought a suit in equity in the Western district of Pennsylvania, and on June 24th this was transferred by Judge Young to the law side of the court. In the Court of Appeals there was some dispute whether the agreement (if made at all) was an entire contract, and whether the suit had been prematurely brought because the bill in equity was filed before April 1st. Naturally this question was not considered in the District Court, recovery being denied on other grounds; and we need only say briefly that, if the contract was made, the plaintiff was entitled to recover damages in some amount, leaving the proper measure to be determined at another trial.

[1] The principal defenses were: (1) That W. T. Hoblitzell had no authority to make the contract; and (2) that, even if he had such authority, no contract had actually been made, that nothing except negotiations had passed between the parties, and that the contract was not to come into existence until the writing should be signed. On the question of Hoblitzell's authority, we think the plaintiff made out a prima facie case. The letters are not signed by him as an individual, but are signed in the defendant's name, authenticated by Hoblitzell as secretary; and moreover there was evidence that on the letter head of the defendant's communication of August 19th (which was proved by the introduction of a copy, the original having been lost) Hoblitzell was described, not only as secretary, but also as treasurer and general manager. This was sufficient evidence to go to the jury on the question of his authority to bind the defendant.

[2] But in both courts the stress of the dispute was laid on the language of the letters themselves, and it is upon this that the decision of the learned trial judge is put. The force of his argument must be admitted, but we are obliged to disagree with his conclusion. As we read the letters, they show a complete meeting of minds upon all terms of the contract, and we regard the signing of the suggested form merely as a desirable convenience and not as a condition precedent. The plaintiff's letter of August 16th, with the inclosed writing, stated definitely the terms on which the plaintiff was willing to make the contract, and to these terms the defendant agreed on August 19th, making the single exception that the time for initial delivery should be changed. This was a counter proposition; but it dealt with one term only, and when the plaintiff agreed to the change the contract was complete, and nothing more was needed to bind both parties. We do not find in the letters the intention of either party not to be bound until a formal writing had been signed, and in this respect the case differs essentially from several decisions that have been cited.

Further discussion seems to be needless. No term was left unsettled; everything had been agreed upon, either expressly or by plain implication or reference; and we see no sufficient ground for supposing that the execution of a formal writing was made a condition precedent to the taking effect of the contract. Many authorities on this subject will be found in 9 Cyc. 288, note 99, in 7 A. & E. Ency. 140, notes 1 and 2, and in 29 L. R. A. 431, note to Sanders v. Pottlitzer, etc., Co.

The judgment is reversed, and a new venire is awarded.

(217 Fed. 751)

LOUISIANA EXCURSION CO. v. GIDIONSEN et al.

(Circuit Court of Appeals, Eighth Circuit. October 12, 1914.)

No. 4059.

ADMIRALTY (§ 118*)—REVIEW ON APPEAL—FINDINGS OF FACT.

A finding of fact made by a court of admiralty on conflicting evidence is presumptively correct, and will not be reversed by the appellate court, unless the record clearly shows by the weight of the evidence that it is erroneous.

[Ed. Note.—For other cases, see Admiralty, Cent. Dig. §§ 758–775, 794; Dec. Dig. § 118.*

Appealable orders and decrees in admiralty, see note to In re Oceanic Steam Navigation Co., 124 C. C. A. 348.]

Appeal from the District Court of the United States for the Eastern District of Missouri; David P. Dyer, Judge.

Suit in admiralty by the Louisiana Excursion Company against A. Gidionsen, Henry Scherf, and the steamer Belle of the Bends. Decree for respondents, and libelant appeals. Affirmed.

Paul A. Sompayrac and William H. Byrnes, Jr., both of New Orleans, La., for libelant.

William F. Woerner, of St. Louis, Mo., and Campbell Cummings, of Jefferson City, Mo., for appellee Gidionsen.

Before SANBORN, Circuit Judge, and TRIEBER and REED, District Judges.

SANBORN, Circuit Judge. The appeal in this case presents the single question whether or not the court below correctly decided questions of fact upon conflicting testimony. The Louisiana Excursion Company filed its libel in admiralty against Henry Scherf, H. Gidionsen, and the steamer Belle of the Bends, and asked a decree that Scherf and Gidionsen pay it $6,000, part of the purchase price of the steamer, and that the steamer be condemned and sold to pay that amount. The averments of the libel were that Scherf and Gidionsen bought the boat of the libelant for $4,000 paid by Gidionsen and a note of $6,000 made by one Brunner, which purported to be secured by an assignment of rents to accrue from certain real estate in St. Louis, and that Scherf and Gidionsen induced the libelant to make the sale by false representations that the assignment of the rents and certain insurance policies

*For other cases see same topic & § NUMBER in Dec. & Am. Digs. 1907 to date, & Rep'r Indexes

on the real estate amply secured the payment of the note, when in fact there was a prior assignment of the rents, a part of the improvements on the land had been condemned by the city of St. Louis, the remainder was condemned within two months after the sale, the premiums on the insurance policies had not been paid, and the policies were canceled. There was a decree pro confesso against Scherf, and the case proceeded to answer and trial against Gidionsen.

His answer was a denial that he participated in the purchase of the steamer of the libelant, or in any representations that the assignment of the rents and the insurance policies well secured the Brunner note, and an assertion that the facts relating to the transaction were these: Scherf controlled the Brunner note and the assignment of the rents in question, and had tried to purchase the steamer of the libelant about a month before May 12, 1912, when the sale was made. At that earlier date the president of the libelant and its broker, who resided in New Orleans, came to St. Louis, spent several days and examined the security offered by the assignment; but the negotiation failed because Scherf could not raise the money to make the payment of cash required. A few days before the sale Scherf applied to Gidionsen for a loan on the security of the steamer, and he went with Scherf to New Orleans to examine the boat, which was lying there, and agreed to loan $4,000 upon it. He made the loan, paid the $4,000, and took as his security the assignment of two prior notes for $1,500 and $12,000, respectively, which were secured by mortgages on the steamer, the payment of which had been previously assumed by the libelant, and for this payment of $4,000 and the Brunner note and the assignment of the rents of the St. Louis real estate the libelant sold and conveyed the steamer to Scherf by a bill of sale which expressly recited that the note of Brunner was secured on property in St. Louis and "not resting on the boat." Scherf employed Gidionsen to take the steamer to St. Louis and promised to pay him any necessary expenses of the trip when he arrived there. The steamer broke down on the way, and Gidionsen was compelled to spend about $3,500 to repair her and get her to St. Louis. He drew on Scherf for the money, but Scherf did not pay the drafts, and after Gidionsen's arrival at St. Louis Scherf said he could not pay the expenses and the prior liens held by Gidionsen, and made a bill of sale of the steamer to the latter.

The evidence is uncontradicted that Gidionsen had no interest in the St. Louis real estate, the rents therefrom, or the Brunner note, and that he did not participate in the negotiation with the president of the libelant or its broker at St. Louis, that he never met either of them until he arrived in New Orleans about the time of the sale, and that he had never examined the St. Louis property, as they had, with a view of making a loan on the security of its rents. All the written evidence of the transaction is consistent with the statement of it made by Gidionsen in his answer, and that statement is supported by his testimony at the trial. The record contains some scraps of testimony, some disconnected incidents, tending to raise a suspicion that the interest of Gidionsen in the sale was greater than that of a secured creditor, but nothing to prove that charge, and it contains no evidence that at the time of the sale to Scherf, or at any time before he incurred the expenses of

the trip to St. Louis, he had any knowledge or intimation that the assignment of the rents did not amply secure the payment of Brunner's note. A recital of the testimony of the various witnesses might demonstrate this, but it would be futile. Suffice it to say that each of the members of the court has carefully read all the evidence in the case. The finding of the court below is supported by the legal presumption that its decision of questions of fact upon conflicting testimony was right, unless the record clearly shows that it was erroneous, by the writings and by the weight of the evidence, and this court is unanimous in its conclusion that it should be sustained.

Let the decree in favor of Gidionsen be affirmed.

(217 Fed. 753)

THE ELENORE.

(Circuit Court of Appeals, Sixth Circuit. November 4, 1914.)

No. 2490.

ADMIRALTY (§ 118*)—REVIEW ON APPEAL—FINDINGS OF FACT.

Where the determination of a suit in admiralty for personal injuries depends upon questions of fact, as to which the evidence is conflicting, and all or most of the testimony was taken in open court before the trial judge, who also had the opportunity to observe the physical condition of libelant, which was a material fact, his decree will not be disturbed by an appellate court, unless there is a decided preponderance of evidence against it.

[Ed. Note.—For other cases, see Admiralty, Cent. Dig. §§ 758–775, 794; Dec. Dig. § 118.*

Appealable orders and decrees in admiralty, see note to In re Oceanic Steam Navigation Co., 124 C. C. A. 348.]

Appeal from the District Court of the United States for the Western District of Tennessee; John E. McCall, Judge.

Suit in admiralty by Tom Jenkins against the steamboat Elenore and Robert E. Lee, managing owner and executor of the estate of James Lee, deceased. Decree for libelant, and respondents appeal. Affirmed.

Ralph Davis, of Memphis, Tenn., for appellants.

E. G. Bell, of Memphis, Tenn., for appellee.

Before WARRINGTON, KNAPPEN, and DENISON, Circuit Judges.

PER CURIAM. This is an appeal from a decree awarding damages ($2,000) in favor of Jenkins against the steamboat Elenore, and Robert E. Lee (managing owner and executor of the estate of James Lee, deceased), appellants, and declaring a lien upon the Elenore and its equipment to secure recovery. After the decree was entered, Jenkins died, and the suit was revived in the name of his administrator, the North Memphis Savings Bank. The suit was for personal injuries, and the allegations of the petition in substance were: That during a period of extremely cold weather (January 6 and 7, 1912) and while Jenkins was serving as a roustabout on the Elenore, certain of its controlling

*For other cases see same topic & § NUMBER in Dec. & Am. Digs. 1907 to date, & Rep'r Indexes

officers and men forbade Jenkins to enter and prevented him from entering any of the heated portions of the boat; that in consequence his fingers were so severely frozen as permanently to unfit him for work and that this occurred in the course of one of the regular round trips of the boat, on the Mississippi river, between Memphis and Butler's Landing. A marked change in the weather took place after the boat left Memphis; the temperature falling to two degrees below zero. The case was tried before Judge McCall, without the intervention of a jury. The testimony of all the witnesses was taken before the court, except that of the captain of the boat, which was by deposition. Jenkins testified positively that he was excluded from the heated parts of the boat; and the men in charge testified positively that he was not, stating that all the roustabouts, four in number, were given express permission to enter those parts and keep themselves warm and comfortable. There is, however, no substantial dispute of the facts that Jenkins' fingers were frozen during the trip in question; that portions of the flesh at the ends of the fingers subsequently sloughed off; and that he was thereby permanently disabled. Admittedly a certificate was given to Jenkins by the captain of the Elenore on the day after the trip was completed, which entitled Jenkins to enter the marine hospital in Memphis. He was first treated in the uptown office of the hospital, and later in the hospital, but only for a comparatively short time. The condition of his fingers was testified to by Jenkins and his mother and by the physician who attended him for several months after the occurrence. Above all, at the time of the trial, Jenkins' fingers showed unmistakable signs of injury from freezing. It seemed incredible to the learned trial judge that Jenkins would have neglected opportunities for relief from such extreme effects of cold weather, if permission to enter the heated portions of the boat had really been given. The judge saw and heard the witnesses (except the captain), and at times interrogated them. He saw the man's fingers and heard the physicians explain the significance of their appearance. Such opportunities always afford distinct advantage in determining the value of testimony; and, unless there is a decided preponderance against a decree or judgment rendered under such circumstances, the rule in this court is not to disturb it. Monongahela River Consol. C. & C. Co. v. Schinnerer, 196 Fed. 375, 379, 117 C. C. A. 193; In re Snodgrass, 209 Fed. 325, 326, 126 C. C. A. 251; Carey v. Donohue, 209 Fed. 328, 333, 126 C. C. A. 254. The evidence, as it appears in the record, does not warrant a departure from this rule.

The decree is affirmed, with costs.

(217 Fed. 689)

LOVEWELL et al. v. SCHOOLFIELD et al.

(Circuit Court of Appeals, Sixth Circuit. October 9, 1914. On Petitions for Rehearing, December 16, 1914.)

Nos. 2375, 2376, 2377 and 2391.

1. EXECUTORS AND ADMINISTRATORS (§ 502*)—ACTIONS FOR ACCOUNTING BY EXECUTORS—STATEMENT OF ACCOUNTS.

By a will disposing of a considerable estate the same persons were made executors, with a wide discretion both as to the time of settlement and the method of disposing of the assets, and also trustees of property constituting a large part of the residuary estate, which was to be held in trust and the income only paid to a niece of the testator and her children until her youngest child reached majority. Testator was a member of a partnership, a stockholder in several business corporations, and also obligated as surety and indorser for others, all of which delayed the settlement of the estate which had not been closed when the last of the executors died 16 years after the death of the testator. In the meantime they had made considerable advances to the beneficiaries of the trust estate, and also to others of the residuary legatees, all of which was shown in their periodical reports and was known to the probate court. *Held*, that on an accounting between their legal representatives and bondsmen and their successor trustee there was no imperative requirement that their accounts as executors should be stated in advance of or as formally separate from their accounts as trustees.

[Ed. Note.—For other cases, see Executors and Administrators, Cent. Dig. §§ 2149–2152; Dec. Dig. § 502.*]

2. EXECUTORS AND ADMINISTRATORS (§ 514*)—ACTIONS FOR ACCOUNTING BY EXECUTORS—PARTIAL SETTLEMENTS AS EVIDENCE.

The executors from time to time filed reports and made settlements with the probate court, as required by Shannon's Code Tenn. § 4031 et seq., which provides that the clerk shall state the accounts of executors and report the same to the court for settlement on notice to persons interested, and that "settlements, when so made and recorded, shall be prima facie evidence in favor of the accounting party." Section 5567 also provides that "settlements of personal representatives and guardians made in the county court in pursuance of law are to be taken as prima facie correct." The accounts of such executors were so stated and reported by the clerk as annual or partial settlements, and approved and recorded. *Held*, that where they were not attacked until many years afterward and after the death of the executors, and apparently all others having a personal knowledge of the facts, they were properly taken as prima facie correct on the accounting, although the record did not show affirmatively the giving of the statutory notice.

[Ed. Note.—For other cases, see Executors and Administrators, Cent. Dig. § 2292; Dec. Dig. § 514.*]

3. EXECUTORS AND ADMINISTRATORS (§§ 473, 474*)—ACTION FOR ACCOUNTING BY EXECUTORS—STATING OF ACCOUNT.

In a suit for an accounting by executors brought after their death, their settlements, made from time to time with the probate court and which under the state statute were prima facie correct, were properly made the basis of the accounting, and where the bill set out a large number of items in such settlements which were criticized, and showed a familiarity with the affairs of the estate, it was not prejudicial error to confine the inquiry to such items.

[Ed. Note.—For other cases, see Executors and Administrators, Cent. Dig. §§ 2041–2060; Dec. Dig. §§ 473, 474.*]

*For other cases see same topic & § NUMBER in Dec. & Am. Digs. 1907 to date, & Rep'r Indexes

4. EXECUTORS AND ADMINISTRATORS (§§ 473, 474*)—ACTION FOR ACCOUNTING BY EXECUTORS—MASTER'S REPORT.

In such a suit the report of the master to whom the cause was referred was not subject to objection because it did not contain a complete statement of the executors' account in debtor or creditor form, where it contained itemized exhibits and schedules which, in connection with the inventory and settlements made by the executors, afforded more complete information than such a statement would have done.

[Ed. Note.—For other cases, see Executors and Administrators, Cent. Dig. §§ 2041-2060; Dec. Dig. §§ 473, 474.*]

5. EXECUTORS AND ADMINISTRATORS (§§ 473, 474*)—ACTION FOR ACCOUNTING BY EXECUTORS—MASTER'S REPORT.

On such an accounting it is not an objection to the master's report that it was based in part on the cashbook kept by the executors, who died prior to the suit, which was unimpeached and contained entries of all cash transactions relating to the estate, and was used by the master as explanatory of and supplementary to the executors' settlements.

[Ed. Note.—For other cases, see Executors and Administrators, Cent. Dig. §§ 2041-2060; Dec. Dig. §§ 473, 474.*]

6. APPEAL AND ERROR (§ 1022*)—FINDINGS OF MASTER—REVIEW BY APPELLATE COURT.

The findings of a master on an accounting before him, concurred in by the court, should not be disturbed by an appellate court unless clearly wrong.

[Ed. Note.—For other cases, see Appeal and Error, Cent. Dig. §§ 4015-4018; Dec. Dig. § 1022.*]

7. PARTNERSHIP (§ 245*)—REAL ESTATE—CONVEYANCE BY SURVIVING PARTNERS.

A purchaser of real estate, owned by a partnership from the surviving members who had authority under the partnership articles to sell, is not bound to look to the application of the proceeds, but acquires a good title.

[Ed. Note.—For other cases, see Partnership, Cent. Dig. §§ 514-518; Dec. Dig. § 245.*]

8. HUSBAND AND WIFE (§ 115*)—PERSONAL ESTATE OF WIFE—AGREEMENT OF HUSBAND TO RETENTION AS SEPARATE ESTATE.

While at common law the personal estate of a wife by the marriage becomes the property of her husband, he is not bound to assert such marital right, but may validly agree, either expressly or impliedly, to her retention of her personal property as her separate estate.

[Ed. Note.—For other cases, see Husband and Wife, Cent. Dig. §§ 408-412; Dec. Dig. § 115.*]

9. EXECUTORS AND ADMINISTRATORS (§ 93*) — CHARGES ON ACCOUNTING — RENTS.

Executors had no authority to operate at the risk of the estate a plantation in which the estate held a large interest, but are liable for the rental value of such interest.

[Ed. Note.—For other cases, see Executors and Administrators, Cent. Dig. §§ 407, 408; Dec. Dig. § 93.*]

10. EXECUTORS AND ADMINISTRATORS (§ 528*) — LIABILITY OF SURETIES — RENTAL VALUE OF REAL ESTATE.

Under the law of Tennessee sureties on the bond of executors are liable for the rental value of the interest of the estate in land situated in another state, where such interest is personal property and was shown on the executors' inventory.

[Ed. Note.—For other cases, see Executors and Administrators, Cent. Dig. §§ 2375-2394; Dec. Dig. § 528.*]

*For other cases see same topic & § NUMBER in Dec. & Am. Digs. 1907 to date, & Rep'r Indexes

11. TRUSTS (§ 231*) — TESTAMENTARY TRUST — ACCOUNTING BY TRUSTEE — CREDITS.

An executor and trustee under a will, to whom real estate in which both he and the estate had an equitable interest was conveyed as such trustee to be held for the trust estate, *held* entitled on an accounting to credit for the value of his personal interest in the property.

[Ed. Note.—For other cases, see Trusts, Cent. Dig. §§ 330–335; Dec. Dig. § 231.*]

12. TRUSTS (§ 231*)—TESTAMENTARY TRUST—ACCOUNTING BY TRUSTEE.

An executor and trustee under a will who, on the insolvency of a corporation of which he and the estate were stockholders, and which was a large creditor of the beneficiary of the trust, with the consent of the court purchased the account against her *held*, on an accounting as trustee, entitled to credit only for the amount which the claim cost him, and not for the amount of the claim.

[Ed. Note.—For other cases, see Trusts, Cent. Dig. §§ 330–335; Dec. Dig. § 231.*]

13. EXECUTORS AND ADMINISTRATORS (§§ 106, 118*)—ADMINISTRATION OF ESTATE—LOANS—LIABILITY OF EXECUTOR.

An executor who, as well as the testator, was a large stockholder in a business corporation *held* not authorized to lend money of the estate to such corporation without security, but not liable for the loss of the stock belonging to the estate through insolvency of the corporation.

[Ed. Note.—For other cases, see Executors and Administrators, Cent. Dig. §§ 433, 472–482; Dec. Dig. §§ 106, 118.*]

14. EXECUTORS AND ADMINISTRATORS (§ 160*)—POWERS—PRIVATE SALE OF CORPORATE STOCKS.

Shannon's Code Tenn. § 3979, requiring executors and administrators to "make sale of the goods and chattels of the deceased to the highest bidder on 10 days notice," if construed to prohibit private sales and to include as goods and chattels corporate stocks, does not control the discretion of executors, given by the will "full and ample authority and power * * * to use their discretion" in the settlement of the estate, and such executors cannot be held liable on account of the private sale of stocks, where they exercised the discretion which a reasonably prudent and intelligent man would have used in the administration of his own affairs.

[Ed. Note.—For other cases, see Executors and Administrators, Cent. Dig. § 637; Dec. Dig. § 160.*]

15. EXECUTORS AND ADMINISTRATORS (§ 281*)—ACCOUNTING BY EXECUTORS—CLAIMS PAID AFTER TIME LIMITED BY STATUTE.

Under a statute requiring executors to pay proved claims against the estate within a stated time after issuance of letters testamentary, where claims were paid after such time the presumption is, in the absence of proof to the contrary, that the delay was at the request of the executor, and he is not liable as for an illegal payment.

[Ed. Note.—For other cases, see Executors and Administrators, Cent. Dig. §§ 1102–1104, 1106–1115; Dec. Dig. § 281.*]

16. EXECUTORS AND ADMINISTRATORS (§ 494*)—ADMINISTRATION OF ESTATE—EXECUTOR AS ATTORNEY FOR ESTATE—FEES.

Under the laws of Tennessee an executor, acting also as attorney for the estate, may recover compensation for his services in both capacities.

[Ed. Note.—For other cases, see Executors and Administrators, Cent. Dig. §§ 2084–2087; Dec. Dig. § 494.*]

17. EXECUTORS AND ADMINISTRATORS (§ 314*)—TIME OF ACCRUAL OF RIGHT TO DEVISE OR BEQUEST—RESIDUARY LEGATEES.

Where the settlement of the estate of a testator was justifiably delayed through a number of years, owing to the nature of the property

*For other cases see same topic & § NUMBER in Dec. & Am. Digs. 1907 to date, & Rep'r Indexes

and liabilities of the testator, limitation does not run against the claims of residuary legatees to their respective shares during the time of such delay.

[Ed. Note.—For other cases, see **Executors and Administrators**, Cent. Dig. §§ 1274–1297; Dec. Dig. § 314.*]

Appeals from the District Court of the United States for the Western District of Tennessee; John E. McCall, Judge.

Suit in equity by James H. Lovewell, as trustee, and others, against Dudley T. Schoolfield, individually and as executor of the will of W. W. Schoolfield, deceased, and others. From the final decree, appeals were taken by complainants, by Lena Bakrow and Charles Bakrow, her husband, as cross-complainants, by John H. Poston and another, sureties on the executor's bond, and by Dudley T. Schoolfield, individually and as executor, etc. Modified and affirmed.

Wm. M. Randolph, of Memphis, Tenn., for appellants Lovewell and others.

Caruthers Ewing, of Memphis, Tenn., for appellant Hill.

G. J. McSpadden, of Memphis, Tenn., for Mr. and Mrs. Schoolfield.

J. H. Poston, Jr., of Memphis, Tenn., for appellant Poston.

A. W. Biggs, of Memphis, Tenn., for John Wade & Sons.

Before WARRINGTON, KNAPPEN, and DENISON, Circuit Judges.

KNAPPEN, Circuit Judge. Louis Hanauer, of Memphis, Tenn., died August 21, 1889, without issue, leaving a will, which is printed in the margin.[1] He was at the time a member of the firm of School-

[1] "I, Louis Hanauer, of Shelby county, Tennessee, do make and declare my last will and testament as follows, viz.:

"Item First. I revoke and annul all former wills by me made.

"Item Second. I direct that any just debts I may owe at the time of my death be paid by my executors as promptly as possible without detriment or sacrifice to my estate.

"Item Third. If, at my death, I am indebted as guardian to Flora and Jacob Hanauer, or either of them, I especially request and direct that interest thereon shall, without fail, be paid them four times a year, so long as any of said indebtedness remains unpaid.

"Item Fourth. I give and bequeath to Walter, Willie and Cora Lowder and their sister Ida (now Hoffman), each the sum of five hundred dollars.

"Item Fifth. I give and bequeath to each of the children of my sister Teresa, the sum of five hundred dollars.

"Item Sixth. I give, bequeath and devise the one-half of all the residue of my estate to my niece, Mary Hampson and her children who may be living at the time of my death, and also those thereafter born to her, she and her children taking equal share and share alike. The property given by this item of my will is to be vested in the trustees hereinafter named, and to be possessed, controlled and managed by them, and only the net income therefrom paid over to Mrs. Hampson, for the support and maintenance of herself and children, and the property interests of said Mrs. Hampson to be her separate estate, free from all control, marital rights and liabilities of her present, or any future husband. Upon the lawful coming of age of the young-

*For other cases see same topic & § NUMBER in Dec. & Am. Digs. 1907 to date, & Rep'r Indexes

field, Hanauer & Miller, wholesale grocers and cotton factors, each partner having a one-third interest. The testator's brother, Jacob Hanauer, then deceased, who had at one time been a member of the firm, left an estate of some value, and two of his children were still under Louis Hanauer's guardianship. The latter was also trustee for the estate of his niece, Mary Hampson (a daughter of Jacob Hanauer, and beneficiary under the 6th item of the will), consisting of upwards of $18,000 personal and an amount of valuable real estate. A few months before the testator's death the copartnership ceased active business, upon the formation of a corporation under the name of the Schoolfield-Hanauer Company. This corporation had a capital stock of $67,000, Hanauer holding $21,000, Schoolfield and Miller

est child of said Mrs. Mary Hampson, then said trustees shall make the proper division of the property given her and them by this item of my will.

"If any of the children of said Mary Hampson shall die before coming of lawful age, his or her share shall go in equal parts to his or her brothers or sisters.

"Item Seventh. My home place on the south line of Kerr avenue, near Memphis, Tenn., I wish to go to the parties named as legatees in the sixth clause of this will, in the proportions and upon the terms, conditions and limitations therein provided and stipulated, as to the property given thereby, and I make it a condition precedent to the vesting or taking effect of the sixth item of this will that said Mary Hampson shall, by proper and sufficient conveyance, duly recorded within sixty days from the probate of this will, convey said homestead place to said trustees, upon the trust terms and limitations aforenamed in the sixth item hereof.

"Item Eighth. All the balance and residue of my estate, real and personal, I give, bequeath and devise to Fanny Lowrance and the legal heirs of my deceased brother, Jacob Hanauer, equally, that is to say, Fanny Lowrance shall take one-sixth thereof, and said heirs of my brother Jacob the remaining five-sixths (5/6) thereof per stirpes, and not per capita, they being given in number, excluding said Mary Hampson, who shall have and take no interest under this item of my will.

"Item Ninth. In case of the failure of Mrs. Hampson to comply with the seventh item of this will, and the condition therein imposed, then it is my wish and direction that the property given in the sixth item hereof shall go and belong to her children, excluding her from any interest whatever therein, and upon the term and limitations in said sixth item named.

"Item Tenth. Any legatee or devisee hereunder taking steps to litigate or contest this will, shall forfeit all benefits thereunder.

"Item Eleventh. I desire and direct that my estate be settled and wound up hereunder as speedily as possible, without injury to, or sacrifice of same, and to this end I give full and ample authority and power to my executors, hereinafter named, to use their discretion in so settling the same, and if necessary to prevent loss or sacrifice, to postpone the payment of the legacies herein given to such time as will prevent same.

"Item Twelfth. I nominate and appoint my friend W. W. Schoolfield and D. H. Poston, of Memphis, Tennessee, as both executors and trustees to execute this will, giving them full power to sell and convey any property to pay off debts, and also whenever they both agree in opinion that it is to the interest of all concerned to do so, and they shall not in any manner be held liable for any errors in the exercise of such discretion.

"They shall also as such trustees, hold, manage and control the legacies of such of the legatees as are minors, during their minority, paying to the beneficiaries only the net income or interest, with power of sale as above defined.

"Signed and sealed at Memphis, Tenn., this 18th day of September, 1888. [Signature, attestation, etc., omitted.]"

each $19,000, the remaining $8,000 being divided between four others. In payment of its capital stock, it took over the stock in trade of the copartnership, which was dissolved by Hanauer's death, Miller and Schoolfield being thereupon the surviving partners, as well as in practical control of the affairs of the corporation. Schoolfield was also one of the executors and trustees under testator's will, which was admitted to probate August 29, 1889. Poston, the other executor and trustee, had been Hanauer's attorney. The executors immediately qualified, and filed an inventory October 2d thereafter. The estate consisted of: (a) Cash in bank, $9,534.42; (b) nearly $6,000 (net) life insurance; (c) one-third of the net assets which should remain after the liquidation of the affairs of the partnership, Hanauer's apparent or book credit therein being $97,859.13; (d) the Kerr avenue homestead mentioned in the seventh item of the will, together with other real estate interests; (e) a considerable amount of personal property, consisting largely of notes, stocks and bonds, carried in the executors' inventory at about $250,000, treating the corporate stocks at par value. The latter included $54,000 in the National Cotton Seed Oil & Huller Company (hereafter called the Cotton Company); $13,500 in the Brush Electric Light & Power Company (hereafter called the Electric Company); and $21,000 in the Schoolfield-Hanauer Company. The Kerr avenue homestead was duly conveyed by Mrs. Hampson to the trustees under the will, as provided by the seventh paragraph thereof, to be held for her benefit and that of her children.

In October, 1890, the executors filed in the probate court their first annual account, and in the same month Mrs. Hampson's husband was, by order of the court, made trustee of his wife's interests formerly held by testator in trust for her. In 1891, Poston, one of the executors died, Schoolfield being thereafter sole executor and trustee. He, in 1891, filed a second annual account, covering transactions both before and after Poston's death, and also filed annual accounts in 1895, 1896, 1898, 1901, and 1903. Each of these accounts purported to contain in detail a statement of all the receipts and disbursements connected with the execution of the will and the administration of the entire estate. The first account showed, among other things, payment of $18,837.18 in discharge of testator's liability as guardian of the children of Jacob Hanauer, payment in full of the money legacies under the fourth and fifth items of the will, amounting to $5,500; payment of debts and liabilities of the testator amounting to $8,304.70, including liabilities of $2,075.29 on guaranty and $878.23 as surety; also $36,195.05 as loans and advances to the Cotton Company and Electric Company. The second report showed, among other items, payments of more than $7,000 to Mrs. Hampson on the testator's liability as trustee, and advances of $9,000 to the legatees, against their distributive shares, under the eighth item of the will. Others of the reports included payments to or for the benefit of the legatees under the eighth item, as well as payments to or for Mrs. Hampson, both on account of the testator's liability to her and as beneficiary under the will. The seventh report showed, among other items, payments

both to Mrs. Hampson and to the beneficiaries under the eighth item, to make good losses on lands and to equalize advances. In 1891, under partition proceedings between the beneficiaries under the sixth and eighth items of the will, certain real estate of the testator, valued at about $18,000, was, by order of the court, conveyed to Schoolfield, as trustee for Mrs. Hampson and her children under the sixth item. So long as the corporation Schoolfield-Hanauer Company did business, collections and disbursements, as well as distributions to the copartners and their representatives on account of partnership affairs, were made through the corporation, which also furnished Mrs. Hampson large amounts of supplies and money, which were used in support of herself and family. It was wound up by insolvency proceedings in 1896, paying 39 cents on the dollar. When it failed it owed the copartnership, as well as Hanauer's estate, and held a large balance of account against Mrs. Hampson, which was transferred to Schoolfield. The capital stock was of course wiped out. Among the assets of the copartnership at Hanauer's death were: (a) The business property on Front street in Memphis, used as a place of business by the copartnership and later by the successor corporation. This property was sold in 1897 by the two surviving copartners, reaching by mesne conveyances the firm of John Wade & Sons. (b) A debt of one Townsend of $1,653.81, which, together with $4,912.84 owing to W. W. Schoolfield, was secured by a trust mortgage upon land in Shelby county, Tenn., which, in 1898, was sold on foreclosure to Mrs. Schoolfield, wife of the executor, trustee, and partner. By her death her son, Dudley T. Schoolfield, succeeded to her interest, and he later conveyed the property to his wife, Edith Brooks Schoolfield. (c) An indebtedness of $18,529.05 from Ferguson & Hampson, the latter being the husband of Mary Hampson. This was secured ratably with an indebtedness from that firm to testator of $17,776.03, the two debts being subject to a purchase-money lien held by testator of $21,114.60 upon Nodena Plantation, so-called, in Mississippi county, Ark. Foreclosure proceedings were pending at testator's death, and in 1891 the premises were sold thereunder to Frank P. Poston and Dudley T. Schoolfield, as trustees, for the benefit of the creditors named, for $45,000, which was less than the total of all the claims. Hanauer's estate was thus the beneficiary under the trust conveyance, except only an apparent interest on the part of Miller and Schoolfield, each in the amount of $4,796.24. In 1897, six years after the foreclosure sale, the beneficiaries under the eighth item of the will conveyed their interests in the plantation to Schoolfield, trustee, to be held by him for Mrs. Hampson and her children, under the sixth item, subject to the amounts due Schoolfield and Miller, which the trustee, together with Mrs. Hampson and her husband, assumed. Miller transferred his interest in Nodena Plantation to Susan Thomas, now Mrs. Norfleet.

Miller died in 1903. Schoolfield died about October 1, 1905, while still executor and trustee, leaving his son, Dudley T. Schoolfield, as his sole heir, devisee, and legatee. A summary of receipts and expenditures by the executors and trustees, based upon the master's re-

port, is shown in the margin.[2] Schoolfield's death thus removed the only remaining executor, trustee, and partner. Upon Schoolfield's death, complainant Lovewell, a son-in-law of Mrs. Hampson, upon application of the latter and her children, through their attorney, was appointed trustee as successor to Schoolfield. No successor executor has been appointed.

Lovewell, as trustee, filed his bill in the court below on April 8, 1907, to obtain an accounting of the administration of the Hanauer

[2] Total Receipts.

Cash in bank at testator's death	$ 9,534 42
Bills receivable collected	24,685 34
Stocks and bonds sold	58,445 92
Notes paid, property sales and sundry sales (including one-third of purchase price of Front street storehouse belonging to firm)	26,187 06
Interest and dividends	22,541 05
Rents collected	10,296 36
Coupons collected	420 00
Receipts from Schoolfield, Hanauer & Co. (not including sale of Front street store)	56,970 62
From Cotton Seed Oil & Huller Company	5,000 00
Tax refund	150 40
Cash (no explanation)	577 00
(Note 1.)	$214,808 17

Disbursements.

Dues and assessments on stock		$ 3,085 76
Hanauer accounts paid		7,425 99
Guardianship liability paid		18,837 18
Surety liability paid		628 23
Bequests under fifth item		5,500 00
Taxes		4,066 89
Real estate maintenance and expenses		2,179 93
Loans to Schoolfield-Hanauer Company	$ 3,000 00	
Loans to Brush Electric Company	19,369 76	
Loans to Cotton Company	32,424 71	
		54,794 47
Rents paid		60 00
Mary S. Hampson personal account	$18,328 13	(Note 3)
Mary S. Hampson advances and payments	9,650 05	
Mary S. Hampson taxes and insurance	3,986 26	
		31,964 44
Beneficiaries under eighth item of will—advances and payments		49,659 57
W. W. Schoolfield, trustee (later charged Mrs. Hampson)		32 53
Miscellaneous (Note 2)		29,699 15
Executors' compensation		5,713 63
Balance cash in hand		1,160 40
		$214,808 17

NOTE 1. The receipts take no account of Nodena Plantation ($35,407.51) held for beneficiaries under sixth item, nor of Kerr Avenue homestead, similarly held, nor of contents of home, etc., nor of some other property, both individual and copartnership, yet undisposed of.

NOTE 2. "Miscellaneous" includes (among other items) five judgments aggregating $12,940.28, attorneys' fees apparently between $8,000 and $9,000, costs of partition cases $659.75, as well as other costs of litigation; also compensation allowed D. H. Poston, after his death, $1,875.00, and amount paid W. W. Schoolfield since last probate court settlement, $1,606.15; the latter two items, added to the $5,713.63 above shown, makes $9,194.78 compensation, including $132.08 allowed Dudley T. Schoolfield.

NOTE 3. The first two items of charge to Mrs. Hampson were in large part applied upon her account with the Schoolfield-Hanauer Company.

estate, the enforcement of the trusts created by the will, and the recovery by the several devisees and legatees thereunder of the sums claimed to be due them upon an account and settlement of the administration and of the trusts created by the will; also an accounting of copartnership affairs and of the administration thereof by the surviving partners, as well as a confirmation of their title to Nodena Plantation against all claims of Schoolfield and Mrs. Norfleet. The beneficiaries under the eighth item of the will filed a cross-bill, asking the same relief, so far as pertinent. The causes were put at issue and reference made to a special master for an accounting, under express directions that the inventory of the executors and the various partial settlements made with the probate court should be taken as prima facie correct, the defendants not to be held for any item not set out in the inventory and settlement, except upon specific allegations of the special items and sufficient proof supporting the same. The master made a comprehensive and painstaking report, embracing detailed schedules and statements of the transactions had by the executors and trustees. The master was of opinion that the sales of the Front street lot and the Townsend property were valid and effective to pass title to the respective purchasers. As to the Nodena Plantation, the master found that the conveyance in trust for the beneficiaries under the sixth item of the will was made for the purpose of equalizing the advances made to the various beneficiaries, and that their shares were all equalized on July 5, 1903, except that Hester Hayes was overdrawn on that date $124.77. He charged the executors, in addition to the $1,160.40 cash on hand, with items amounting to $42,263.24, plus $46,587.39 interest thereon. Charging to complainants Schoolfield's interest in Nodena Plantation, and the unpaid balance of Mrs. Hampson's account with the Schoolfield-Hanauer Company, the master found due Mrs. Hampson and her children $7,772.34, plus encroachments upon the corpus of the estate of $7,028.40. Mrs. Norfleet's claimed interest in Nodena Plantation was not taken into account. The master found the beneficiaries under the eighth item entitled to slightly varying amounts, aggregating $44,924.16. All these awards were exclusive of real estate unsold.

This report was excepted to by all the parties in interest. After its filing Mrs. Norfleet filed a cross-bill, asking enforcement of her claimed rights in Nodena Plantation. Schoolfield also filed cross-bill, asking similar relief, as well as other affirmative relief in connection with the accounting. Both cross-bills were stricken from the files. The master's conclusions as to the sale of the Front Street lot, the Townsend land purchase, equalization between beneficiaries, and interests in Nodena Plantation were undisturbed. Charges made by the master against the executor, aggregating a large amount, were disallowed by the court in whole or in part. The restated account found $27.262.50 due from Mrs. Hampson and her children. The final decree, after such restatement, awarded cross-complainants Hester Hayes, Lena Bakrow, and Belle Hayes recoveries against the executor and the sureties upon the bond of the executor and trustee, aggregating $5,007.44; dismissed the cross-bill as to Jacob Hanauer and

Flora Loeb, holding that their cause of action was barred by the statute of limitations; denied recovery to Fanny Lowrance because she had propounded no claim; dismissed the bill so far as recovery was sought against the administrator of Miller's estate; adjudged the costs (including the compensation of the special master) one-half against complainants in the original bill, the other half in favor of the cross-complainants as against the defendant Schoolfield, executor, and canceled the bond of the executors and trustees upon payment of such costs and the amounts awarded to the various cross-complainants. It also validated and confirmed the title of Wade & Sons to the Front street property, as well as the Schoolfield title to the Townsend land. Mr. Hampson died in 1907; Mrs. Hampson died September 14, 1910; by her will her property went to her children, the youngest of whom attained majority October 24, 1910.

The complainants in the original bill (No. 2375), the complainants in the cross-bill (No. 2376), the sureties on the executors' bond (No. 2377), and Dudley T. Schoolfield, as executor of W. W. Schoolfield (No. 2391) have taken separate appeals.

Complainants urge that the entire basis of the accounting is radically wrong (a) in awarding a single accounting instead of two separate accounts, the one as between all the devisees and legatees on one side and the executors on the other, and a second between Mrs. Hampson and her children on the one side and the trustee or trustees on the other; (b) in limiting the attack to matters specifically set up by complainants; and (c) in giving prima facie effect to the inventories filed in and settlements made with the probate court; also that the master's report is insufficient, because not containing a statement of the complete account in debtor and creditor form, and that it lacks competent foundation, because based in part upon the executor's cash book.

[1] In the absence of special circumstances calling for a different procedure, the normal course would have been for the executors to first pay the testator's debts, including guardianship liability to his brother's children and the legacies under the third and fourth items, to turn over to the new trustee (Hampson) the funds in testator's hands belonging to Mrs. Hampson, and then to divide what remained (excluding the Kerr avenue homestead) into two parts, distributing the one part to the beneficiaries under the eighth item, and holding the other part in trust for Mrs. Hampson and her children under the sixth item, thus keeping the executorship and trusteeship distinct in both dealings and accountings. But completion of administration was necessarily delayed by testator's relations to certain of the corporations in which he was a stockholder, and his contract obligations, as indorser and otherwise, on various matters, as well as the liquidation of the affairs of the late copartnership, including the acquisition of Nodena Plantation. Mrs. Hampson and her children apparently needed, so far as feasible, the current income from their interests in the estate, and the beneficiaries under the eighth item desired payments as speedily as possible. The same persons were both executors and trustees. By the eleventh and twelfth items of the will they were

given wide discretion, both as to the time of settlement and as to the method of disposing of the assets. Before ordinary administration could properly have been closed the trustees began making payments to both classes of beneficiaries, and continued such advancements until the death of the last surviving trustee in 1905, all with the knowledge of the probate court, as shown by reports made up to 1903. Under these circumstances there was no imperative requirement that the master state the executors' accounts in advance of or as formally distinct from those of the trustees. As will be seen later, the accounting had furnished, in our opinion, the beneficial equivalent of separate accountings.

[2] As respects the effect of the probate court settlements: Section 4031 of Shannon's Code requires the clerk of the court to take and state the executor's account after two years from the latter's qualification, and once every year thereafter until the administration is closed. This account is not to be taken until the clerk has given to interested parties certain actual or constructive notice. Section 4034. The clerk is authorized to examine the accounting party upon oath touching his receipts and disbursements. The statute seems to contemplate the presentation of the clerk's report to the court, action of the court thereon, and a recording of the same. Section 4041 provides that "settlements when so made and recorded shall be prima facie evidence in favor of the accounting party." By section 4039, provision is made for attack upon the completeness of the inventory by any interested person at any time before final settlement. Section 5567 also provides that the "settlements of personal representatives and guardians made in the county court, in pursuance of law, are to be taken as prima facie correct." It has been said that it is the final settlement which is made prima facie evidence for the accounting party (Cannon v. Apperson, 14 Lea [Tenn.] 553, at pages 581, 582), but the rule of prima facie correctness has been made to apply to annual settlements.[3]

Each of the executors' accounts was verified by the executors' oath. In the case of each the clerk reported that he had taken and stated "the annual settlement" or "partial settlement," as the case might be, and "that the same is in all things regular and unexcepted to." In each case the record recites the coming on of the case to be heard on the partial settlements of the executors, and the report of the clerk thereon; and:

> "It appearing that said settlement is in all things regular, and that no exceptions have been filed thereto, it is therefore ordered that the said settlement be and the same is hereby in all things confirmed, and that the same be recorded in the settlement records of this court."

With respect to the first two accounts, the clerk reported that he had first caused "due and legal notice to be served on all parties interested in the estate of said Louis Hanauer, deceased, of the day on which the same would be stated." The reports on the remaining ac-

[3] Matlock et al. v. Rice, 6 Heisk. (Tenn.) 33, 36, 38; Alvis v. Oglesby, 87 Tenn. (3 Pickle) 174, 183, 10 S. W. 313; Hammond v. Beasley, 83 Tenn. (15 Lea) 618, 620, 627.

counts omit this statement; and in the case of none of them does the record here show any actual proof of service of statutory notice, or whether or not any party interested appeared, although there is nothing in the record negativing such notice, which should perhaps be presumed as against collateral attack. Butterfield v. Miller (C. C. A. 6th Cir.), 195 Fed. 200, 203, and cases there cited at latter page, 115 C. C. A. 152. Several of the Tennessee decisions at least impliedly, and one or more, we think, expressly, recognize the prima facie evidential effect of even an ex parte settlement.[4] Under this state of the Tennessee decisions, and in view of the facts that these settlements were first attacked long after they were made, and after the death of both of the original surviving partners, as well as of both executors and trustees, and, as would appear, of every one having any personal intimate knowledge of the facts, and, further, that vouchers for disbursements made were in large part filed with the reports, we think no error was committed in giving these judicially approved settlements prima facie effect.

[3] Upon the question of pleading: It has been held that on attacking a settlement which is only prima facie correct the complaining party is entitled to a full accounting, without specifying in the bill the items complained of (Turney v. Williams, supra, 7 Yerg. [Tenn.] at page 213; Leach v. Cowan, supra, 125 Tenn. at page 205, 140 S. W. 1070, Ann. Cas. 1913C, 188), yet, as the settlements were prima facie evidence in favor of the executors, they were properly made the basis of the accounting (Matlock v. Rice, supra, 6 Heisk. [53 Tenn.] at page 38; Alvis v. Oglesby, supra, 87 Tenn. at page 183, 10 S. W. 313); and as the suits in question were begun after the death of the parties of whose acts an accounting was sought, and as the bill indicates considerable familiarity with the history of the estate and sets out in great detail items in the accounting criticized, and as all accessible means of information seem to have been in fact presented, and all items which there was shown any disposition to controvert seem to have been inquired into as fully as possible, we think complainant could not have been prejudiced by the requirement that the errors complained of be specified in the pleading.

[4] We see no merit in the criticism that the master's report was not accompanied by a complete statement of the account in debtor and creditor form. The report proper discussed all the important questions presented. At its close the master reported that he had, in obedience to the order of reference, "stated the account from the inventories and partial settlements of the creditors with the probate court, as surcharged by the findings of the master as set forth." The inventories and probate court settlements were already in the record. The report was accompanied by a large number of exhibits and sched-

[4] Matlock v. Rice, 6 Heisk. (53 Tenn.) 33, 38; Turney v. Williams, 7 Yerg. (Tenn.) 172, 210; Snodgrass v. Snodgrass, 1 Baxt. (Tenn.) 157, 160, 161; Hammond v. Beasley, 83 Tenn. (15 Lea) 618, 627; Murray v. Luna, 86 Tenn. 326, 331–332, 6 S. W. 603; Alvis v. Oglesby, 87 Tenn. 174, 183, 10 S. W. 313; Vacarro v. Cicalla, 89 Tenn. 63, 76, 14 S. W. 43; Leach v. Cowan, 125 Tenn. at page 205, 140 S. W. 1070, Ann. Cas. 1913C, 188.

ules, containing not only summaries but itemized statements upon most of the important subjects involved (the latter showing dates, names, and amounts), all amounting to about 47 pages of the printed record. These included a statement of the amount and character of the property received by the executors from the surviving partners, the personal assets of the testator's estate outstanding and undisposed of according to the probate court accountings (both as to those considered good and those regarded worthless), a statement of income and expenditures (both as covered by and since the probate court accountings), a history of the liquidation of stocks, bonds, and other securities, the executors' special account with the estate, schedules of bills receivable paid, of stocks, bonds, and other securities sold, of interest and dividends received, of rents collected, of coupons cashed, of property sales and receipts from the partnership, of miscellaneous disbursements, of testator's debts, dues upon stocks paid, payment of guardian's liability, discharge of taxes on real estate and maintenance thereof, a recapitulation of advancements, payments, and expenditures for accounts of legatees (including insurance and taxes), of loans and advances to various corporations, schedules showing the total remaining equity of each beneficiary under the sixth and eighth items (exclusive of real estate unsold), and how arrived at; also a statement of revenue and expenses relating to the encroachments by Mrs. Hampson upon the corpus of the estate. It is evident that the information so furnished by the master's report, in connection with the inventories and probate court settlements, afforded more valuable information than could have been conveyed by a single, continuous debtor and creditor statement.

[5] The executors' cashbook purports to be a cash account of the executors' transactions. It comprises 61 pages, and extends from August 31, 1889, when it started with a balance in the German Bank to testator's credit (being the item shown on the inventory), until January 4, 1906, a few months following Schoolfield's death, the only entries following which event were an item of cash to Dudley T. Schoolfield, executor, and the bringing down of the cash balance to January 4, 1906. The account was continuous, with numerous strikings of balance, frequently shown as the balance in bank. The cash balance was not struck on the book as of the exact date of the first and second settlements; but in the case of each of the others the balance shown thereby appeared on the cashbook in precisely the same amount, except in one instance with a variation of one cent. The book was evidently kept with scrupulous care, and the balance shown on January 4, 1906, was the amount of cash actually in bank to the credit of the executors. Reports on which probate court settlements were made were evidently made from this cashbook. The master reports that he took the book as a basis, "showing the receipts and disbursements of the executors and trustees" from July 15, 1903 (which was the date of the last partial settlement with the probate court), "as he finds from the deposition of said Schoolfield, and from other evidence in the record, including the cashbook itself, that it reliably shows such receipts and disbursements." The entries since July 15, 1903, are all

on the last four of the 61 pages. We do not understand the book to have been used to override the probate court settlements, but only in confirmation or in explanation and supplement thereof. The rule that the settlements are binding on the executors was not relaxed. When the testimony was taken both executors were dead, as was also Frank P. Poston, who had acted as attorney of the estate since the death of executor D. H. Poston, in 1891, until the death of W. W. Schoolfield in 1905, and "had charge of the accounts and business relating to both trusts under the will," and who had kept the cashbook in part. There were presented check stubs and canceled checks, so far as in the possession of Dudley T. Schoolfield, who appears to have been the only person then living having any substantial knowledge of the situation, and who testified with apparent freedom and fullness with respect to the slight knowledge he had. Due notice of the existence of the cashbook entries was given complainants, a copy thereof being attached to the answer of Dudley T. Schoolfield. Its authenticity is not open to question, and it seems clear, to say the least, that complainants were not prejudiced by its use.

The remaining assignments presented by complainants in the original bill cover a wide range. Besides attacking the sale of the Front street lot and the Townsend purchase, complaint is made that the executors and trustees have not been required to account for all the property inventoried by them, including large items of credits and corporate stocks, or for the use of partnership property and the avails of collections; that, in particular, they should be charged with failure to collect rent on the Front street property during its occupancy by the corporation, and with rent for the Nodena Plantation from 1891 to 1897, when it went into Mrs. Hampson's possession; with loss of the capital stock of the corporation, the failure to collect certain of its accounts, and for debts owing by the corporation to the partnership alleged to have been misapplied, also for disastrous loans made to the Cotton Company and the Electric Company. The charge is also made that the executors were credited with payment of debts barred by the statutes of limitation. Cross-complainants join in the assignments relating to all these matters of complaint. Complainants in the original bill also attack the credit given the executor for Schoolfield's interest in Nodena Plantation. Complainants in the cross-bill also complain that they were denied a separate and distinct accounting relative to sums due them as legatees, of the rejection of the claims of two of the cross-complainants, and for lack of sufficient particulars of the amounts charged as received by cross-complainants. The defendants' assignments, so far as material, will sufficiently appear from the discussion.

[6] Complainants' exceptions to the master's report were all overruled by the court, and as to matters to which they relate we have thus in effect the concurrent findings of master and court, which should not be disturbed unless clearly wrong. See the decisions of this court in Haines v. Bank, 203 Fed. 225, 228, 121 C. C. A. 431; Western Transit Co. v. Davidson, 212 Fed. 696, 701, 129 C. C. A. 232; In re National Pressed Brick Co., 212 Fed. 878, 881, 129 C. C. A. 398.

[7] *The Sale of the Front Street Business Property.* Disregarding forms, the net effect of this transaction was that Schoolfield and Miller, as surviving partners, sold the premises to Mrs. Hill for $13,500. Miller's one-third went to Mrs. Norfleet, as his creditor, Hanauer's share was charged to and accounted for by his executor and trustee, and presumably Schoolfield received his one-third. Mrs. Hill afterwards conveyed to her husband, and they to the firm of John Wade & Sons, who still hold it. The latter paid what we are satisfied was at the time a fair price for the property, all upon the advice of counsel that the surviving partners had full authority to convey. The sale was made with the approval of at least the legatees under the eighth item of the will. Wade & Sons are completely protected; for we have no doubt that the partnership articles, which provided for sale by the survivors of real as well as personal property, according to their judgment, afforded ample authority to make the sale. This being so, the purchasers were not bound to look to the application of the proceeds, even had they not been properly applied. Potter v. Gardner, 12 Wheat. 498, 502, 6 L. Ed. 706; Holden v. Circleville L. & P. Co., 216 Fed. 490, 132 C. C. A. 550, decided by this court June 8, 1914. There was, however, no misapplication of proceeds, for although the surviving partners had the right to hold the entire proceeds of the sale subject to accounting, it was entirely competent for the survivors and the executors to divide up the proceeds of a particular parcel, so long as there remained, as seems to have been the case, ample assets for the payment of all obligations and the adjustment of all balances between partners. In the view we take of the case, it is unnecessary to consider what the situation would have been but for the partnership agreement, nor the questions raised as to the lack of power in Mrs. Hill, as a married woman, to convey to her husband (for both joined in the conveyance to Wade & Sons), nor the question of constructive notice afforded by the abstracts and conveyances.

The Townsend Foreclosure Sale. The land was sold, under foreclosure of the trust deed, for $3,500, which was less than the debt secured to Schoolfield. The master seems to have treated the trust deed as securing ratably the debt to Schoolfield individually and the debt to the copartnership, and disposed of the matter by concluding that there was no evidence tending to show fraud with reference to the sale and transfer of the land by the trustee in the deed and the purchase of the same by Mrs. Schoolfield at the sale, and that there was no evidence tending to show that the executor did not account for the part of the proceeds of the sale due the firm of Schoolfield, Hanauer & Co.

As we construe the trust deed, however, the partnership claim was subordinated to Schoolfield's individual claim, and there was thus nothing to apply on the partnership claim. The substantial question concerns complainants' contention that the conveyance to Mrs. Schoolfield was in effect a conveyance by her husband without consideration and in fraud of creditors, and that the property is thus liable for the satisfaction of whatever balance may be found against Schoolfield on this accounting. We are satisfied that the allegations of actual and purposeful fraud in the conveyance to Mrs. Schoolfield are wholly unsus-

tained; for Schoolfield, though of greatly reduced means, was entirely solvent at the time, and so remained until his death, unless as against such liability as may be established under this accounting; and we have no reason to think that he regarded himself as subject to any liability of this nature. But even if we were to find that the property was conveyed to Mrs. Schoolfield while her husband was insolvent, yet if she actually paid the purchase price, that is the end of the inquiry. The burden is upon complainants to show such nonpayment, and the contrary is presumed from the recitals in the trustee's foreclosure deed. The statement therein that the net purchase price paid the trustee was "applied as a credit upon the note secured by the said trust deed" does not controvert actual payment by the purchaser. Nor is the presumption overthrown by the mere fact that after the death of both Mr. and Mrs. Schoolfield no proof could be found of the latter's actual payment, either by check or otherwise, in view of the testimony of her son, although more or less indefinite, that his mother had personal property of her own.

[8] It is urged, however, that her personal estate became by marriage the property of her husband, and that thus no consideration could have resided in the transfer of money by her to him. It is true that such would be the result of his assertion of marital right, but he was not bound to assert such right (Carpenter v. Franklin, 89 Tenn. [5 Pickle] at page 148, 14 S. W. 484); he could validly agree, either expressly or impliedly, to her retention of her personal property as her separate estate (Snodgrass v. Hyder, 95 Tenn. [11 Pickle] at pages 575–577, 32 S. W. 764); and the testimony that she kept a bank account in her own name and held stocks and funds in another bank, and gave money from time to time to her son, all presumably with her husband's acquiescence, tends to support an implied relinquishment of his marital right (Belford v. Scribner, 144 U. S. at page 504, 12 Sup. Ct. 734, 36 L. Ed. 514). We are satisfied that the decree below reached the correct result regarding this claim.

[9] *The Nodena Plantation.* In 1891, following the foreclosure purchase, the executors and surviving partners contracted with Ferguson for operating the plantation on joint account, Ferguson to have one-half the net profits, the other parties the remaining one-half. Each party to the transaction was to furnish certain equipment or supplies, or both. The supplies were in fact furnished by the Schoolfield-Hanauer Company, which kept an account with the plantation. The cotton raised was to be shipped to the Schoolfield-Hanauer Company for sale. The operation was carried on for five years, resulting in a loss to the Schoolfield-Hanauer Company.

We think the executor had no authority to carry on this business at the risk of the estate; he should have rented the plantation; and we agree with the master and court that the estate is entitled to compensation. It is urged that as the interest of Hanauer's estate was personal, a rental charge would be improper. The court charged interest upon the estate's investment, instead of rental as charged by the master. Both parties agree that the estate's interest was personal, but that, to our minds, is not a sufficient reason for denying rental as such. Had the property been a livery stock or a boat, either of which would be

personal, the propriety of charging rental for actual use of the property could scarcely be doubted. The real question is what rental could reasonably have been obtained therefor. The master found that the plantation was operated at a profit; that the loss resulted from parts of the contract other than rental; that there were about 1,200 acres of cultivated land, and that the rental value was $4,000 per year. The executor was charged with the estate's proportion of that rental, with interest on each year's rental from the first of the succeeding year. The testimony as to rental value is in conflict, ranging from $2 to $7 per acre for cleared land. Hanauer seems to have received and collected $4,000 for its rental in 1889. Cotton culture was depressed from 1891 to 1896; and perhaps $3,600 per year ($3 per acre) is the safer estimate of value. It may be fixed on that basis, including interest as charged by the master. Such rental in fact closely approximates the manager's estimate of profit, viz., $20,000. We think that under the Tennessee statute and decisions the sureties on the executor's bond are liable for the rent, notwithstanding the executor was acting not as executor but as trustee. Porter v. Moores, 4 Heisk. (Tenn.) 16; Lester v. Vick, 2 Heisk. (Tenn.) 476, 479.

[10] It is insisted, however, that the bondsmen are not liable for rent of lands in another state than that in which the administration is had. We see no force in this proposition. It was held, it is true, in Snodgrass v. Snodgrass, 1 Baxt. (Tenn.) 157, 162, that the sureties of an administrator are not liable for the proceeds of property received by him from the sale of his intestate's lands in another state. The reason there given is that the proceeds of the sale of land in Virginia were not assets of the estate in Tennessee, where the administration was granted, but were received in Virginia, and not in the character of administrator in Tennessee. In this case, however, the indebtedness which the plantation later represented was included in the executor's inventory, the foreclosure having been completed after testator's death. We think the plantation, being, as stated, personal property, was plainly Tennessee assets, and within the security of the executor's bond. We may add that the master correctly found that the conveyance of the plantation in the interest of Mrs. Hampson and her children was intended to equalize the advances to the respective beneficiaries up to that date.

[11] The complainants in the original bill criticize the decree for crediting the executor with the amount of Schoolfield's interest in the plantation ($4,796.24, plus interest thereon), and for failing to adjudge that Mrs. Norfleet, as the assignee of Miller's claim, had no title or interest in the plantation. It is contended that the deed made by Dudley T. Schoolfield and Frank H. Poston (trustees under the commissioner's deed of foreclosure) to W. W. Schoolfield, as trustee under the sixth item of the will, conveyed the entire fee of the plantation, thus discharging all the liens and interests theretofore held by the two surviving partners other than Hanauer by virtue of the indebtedness to the firm, which constituted part of the price paid on foreclosure sale; that by the terms of the conveyance to W. W. Schoolfield, trustee, the latter and Miller were to look only to the personal responsibility of Mr.

and Mrs. Hampson; and that, in any event, recovery could not be had in the absence of cross-bill.

We think the executor was rightly credited with the amount of Schoolfield's interest, even if the entire fee was conveyed to him as trustee under the sixth item; for, if so (as we must not be understood as holding), we think it clear that payment of his interest was equitably assumed on behalf of the beneficiaries, rather than left to the personal responsibility of Mr. and Mrs. Hampson; and, this being so, equity requires the enforcement of that assumption. If W. W. Schoolfield so held the legal estate no question of lien or of limitation is involved. If the legal title remained in part in Poston and Dudley T. Schoolfield, trustee, complainants are not prejudiced by the disposition made. The item being treated merely as a credit under the accounting, no cross-bill was required. The beneficiaries under the sixth item having taken the benefit of Hanauer's one-third interest in the firm debt, and having recognized Miller and Schoolfield as entitled to the balance, cannot well be heard to say that Schoolfield should be denied his part because there had been no full settlement of partnership affairs. As to the Miller interest: It is clear that, as he was not a party to the conveyance in question, and as there is no room for claim that he consented to the conveyance of the entire fee to Schoolfield, trustee, in relinquishment or limitation of his rights under the original trust, and as Dudley T. Schoolfield is before the court denying that his conveyance had such effect and recognizing his continued trusteeship for the benefit of Mrs. Norfleet, the decree could not properly adjudge that the entire fee passed under the conveyance to W. W. Schoolfield, trustee, nor quiet complainants' title as against Mrs. Norfleet's claim unless barred by limitation. The court treated Mrs. Norfleet's claim as not within the pleadings or the order of reference, and she has not appealed. As we find no error assigned upon the failure to find her claim barred by limitation, we content ourselves with affirming the decree in the respect under consideration, but without prejudice to such proceeding as either party may take to determine Mrs. Norfleet's rights.

Mrs. Hampson's Account with the Schoolfield-Hanauer Company. This account was opened August 26, 1889, shortly after Hanauer's death. Testator held at his death two notes of Ferguson & Hampson, payable to his order as guardian of Mary S. Hampson, given in 1877 and 1881, respectively, aggregating (principal) $9,623.43. The executor treated these notes, and we think correctly, as uncollectible through the neglect of the testator, and thus as liabilities on the part of his estate to Mrs. Hampson personally. On three separate dates up to and including December 3, 1890, the executor indorsed on these notes an aggregate of $7,138.92, all of which was receipted for by Mr. Hampson as trustee of his wife, and presumably with his wife's approval, the greater part being applied on Mrs. Hampson's account with the Schoolfield-Hanauer Company. May 2, 1895, the balance due on these notes ($12,439.46) was similarly applied upon the account mentioned, and at the same time $4,990.43, as "one-half of interest and dividends collected" upon the assets of the estate, to which Mrs. Hampson was declared entitled under the will for the support of herself and children. The draft for

$12,439.46, as well as the receipt for $4,990.43, were signed by both Mr. and Mrs. Hampson. All these payments to Mrs. Hampson appear on the probate court settlements. They reduced her account with the Schoolfield-Hanauer Company to $13,732.37. On June 2, 1906, when the corporation went into liquidation, the account had increased (including interest) to $24,585.95. With the approval of the court having the liquidation in charge Schoolfield purchased this account, applying the amount thereof upon his large claim against the corporation. This action was taken for the avowed purpose of protecting Mrs. Hampson. All these payments upon account (except the balance last referred to) are included in the items of disbursements made to Mrs. Hampson, appearing on the summary of the executor's receipts and disbursements. The item of $4,990.43 was included in the item of $9,650.05, the bulk of the balance being also applied on the account with the Schoolfield-Hanauer Company, although as to items aggregating $2,881.53 no order therefor by Mr. or Mrs. Hampson is shown. The balance so taken over by Schoolfield was included in making up the balance found in the master's restatement of account to have been overdrawn by Mrs. Hampson.

[12] Complainants object to the payment of the Ferguson & Hampson notes by the executor, and to their application upon Mrs. Hampson's account, for the reasons, among others: (a) That the debt from Ferguson & Hampson did not belong to Mrs. Hampson, she being a married woman, but to her husband; (b) that, Hampson being thus both payor and payee, there was no legal debt; (c) that the testator did not intend to pay the notes, but to extinguish them through the legacy to Mrs. Hampson; (d) that the notes were outlawed before Hanauer's death; (e) that Mrs. Hampson, not being examined separately from her husband, could not rightly direct the application of these notes. These claims are, we think, without merit. Whether the debt was outlawed as against Ferguson & Hampson cuts no figure, because the master's application is based upon the proposition that Hanauer was liable to Mrs. Hampson personally for failing to collect the notes; there is no basis for the claim that testator intended to extinguish the notes by legacy; the liability from Hanauer was to Mrs. Hampson and in a trust capacity, under postnuptial settlement, in which trust the husband was practically the successor, as the notes obviously represented the investment of some of Mrs. Hampson's money. Mr. Hampson, as trustee, participated in carrying out the transaction.

The application of the $4,990.43, as one-half the income of the estate, is criticized for the reasons, among others: (a) That no such income could be paid until the administration was completed and the funds turned over to the trustees; (b) that Mrs. Hampson could not validly contract the indebtedness to the corporation for living expenses; (c) that no attempt was made to apportion income by the executors and trustees in any other instance; and (d) that such income could only be charged out of the one-half covered by the sixth item. But although the executors did not bodily turn over to the trustees the residue above the payments of debts, etc., the same persons were both executors and trustees, and dealt with the beneficiaries under the sixth and eighth

items in the latter capacity, whether so expressed or not, in making the advances against the distributive shares, etc. If the criticism suggested is good, neither Mrs. Hampson nor the beneficiaries under the eighth item had any right to the large sums advanced to both classes, including Nodena Plantation turned over under the sixth item; and to say that it was the duty of Mr. Hampson to support his family ignores the fact found by the master, viz., that Mr. Hampson was without capacity to support them, a condition presumably recognized by the testator in the provision made by the sixth item. To deny Mrs. Hampson the right to use the income of the estate for the support of herself and her children would be pro tanto to nullify the will under which the accounting is asked; Hampson, in fact, as his wife's trustee, approved the application upon the debt in question. It is thus immaterial whether or not the corporation could have enforced collection against Mrs. Hampson as a personal debt. See Flanagan v. Grocery Co., 98 Tenn. 599, 40 S. W. 1079. To the extent that the moneys of the testator's estate applied on the debt of the corporation caused encroachment upon the corpus of the trust estate under the sixth item other considerations pertain, which are not material in this immediate connection. The balance of account held by Schoolfield presents different considerations, but not, we think, controlling. We are satisfied that the indebtedness was incurred on Mrs. Hampson's credit; and, in view of the relations existing between herself, the estate, the corporation, and the executor and trustee under the will, we think it equitable that Schoolfield should be reimbursed, but only for what that account has cost him, which is the extent to which his own recovery from the corporation assets has been decreased by the application of Mrs. Hampson's account on his claim as creditor. We reach this conclusion because the account seems to have been regarded as of doubtful collectibility, for the time being at least.

Schoolfield, the executor and trustee, was also president of the corporation, upon a substantial salary, and the large indebtedness against Mrs. Hampson was the outgrowth of that dual relation. The contracting of the account, and its purchase by Schoolfield, involved to an extent a fiduciary relation. To permit the executor and trustee to recover more than he paid for the account would give him a profit on the transaction, which would be inequitable, notwithstanding his loss in other respects. The beneficiaries likewise have lost through the failure of the corporation.

The Schoolfield-Hanauer Company. A short time before this corporation went into liquidation the executor had advanced to it two sums aggregating $3,000. Repayment had not been made. The corporation also owed the copartnership at the time of liquidation (including interest) $16,630, by reason of undistributed collections on account of the copartnership. In connection with the adjustment of Mrs. Hampson's account with the corporation, the executor had overdrawn Hanauer's third of the last distribution to the extent of $1,303.73. Nodena Plantation owed the Schoolfield-Hanauer Company a balance of $9,345, representing loss from the joint operation of the plantation. The copartnership filed, in the insolvency proceedings, its claim for

$16.630, the executor filing a similar claim for the $3,000 advance, plus $124.85, which the corporation owed Hanauer at his death, plus another account of $192.84, less the $1,303.73 above mentioned. By a compromise made in the liquidation proceeding, one-quarter of the Nodena Plantation account was charged against the copartnership claim, dividends of 39 per cent. being collected on the balance and accounted for by the executors. Another one-quarter of the Nodena debt was charged against the executor's claim, and presumably wiped that out.

As already said, complainants seek to charge the executor with the value of the corporate stock lost, the rental value of the premises during the seven years' occupancy by the corporation, as well as with the indebtedness from the corporation to the copartnership and the executor, respectively.

As to the rent, we think the master rightly charged the executor with one-third the rental value of the premises. It is true the testator's interest in the corporation was large, and there were perhaps adequate reasons for not earlier forcing the corporation into liquidation; but we fail to find that the executor could not, with entire safety to all interests, have enforced collection of a reasonable rental. We think the master's award in this respect should stand. It follows from our conclusion as to the validity of the sale of the Front street property that complainants were entitled to no accounting of rents after sale by the survivors. We think the conclusion that the rents of other partnership real estate had been sufficiently accounted for should not be disturbed.

[13] We are disposed to follow the concurrent action of the master and court which deny recovery on account of the partial loss of the copartnership debt. It does not appear at what time the partnership collections which the account represents were made by the corporation, and immediate liquidation may not have been long anticipated. We think, however, that the executor was not justified in making direct loans to the corporation without security. The corporation was without credit, having no capital beyond its stock in trade, and, from the first, money to operate the business had to be furnished through indorsement of its paper. The executor was not protected by the application of the Nodena account, for, as we have already held, the executor had no right to create that account, and the court's approval of the compromise afforded no protection because based on the executor's consent. The executor should be charged with the $3,000 loaned, plus the indebtedness to Hanauer at his death, which there was ample time to collect in the earlier years of operation, less the item of $1,303.73 before referred to.

The loss of capital stock presents other considerations. The concern was a close corporation. Its stock was not on the market. During the first year or so it appears to have succeeded, and we think the executors could not be charged with lack of care in failing to dispose of it during that period. We are impressed with the view that to have offered Hanauer's stock for sale after the business depression came on would have precipitated the corporation's collapse. While perhaps nothing has been gained by postponing liquidation, we cannot say that

the stock value was lost thereby. The executor should therefore not be charged with this loss.

Brush Electric Light Company Stocks, Bonds, and Advances by Executors. As shown by the inventory, Hanauer owned $13,500 stock and $1,000 bonds of this company. At the time of his death the company was insolvent, as shown by the testimony of its president, Carnes, and "at the end of their road." Hanauer and three other stockholders were indorsers upon notes of the company, which had also an outstanding series of bonds. Certain of the stockholders entered into a contract whereby the Brush Company's property should be conveyed to a new company free from debt, except the bond issue, and a new site furnished, stock in pro rata amount in the new company to be taken for that in the old; the old site to be turned over to the stockholders referred to. Hanauer was represented in this contract, and we are satisfied that it was made in his lifetime, and that he was personally a party to it. At his death this Electric Company stock seems to have been deposited with one Smith, in connection with that of other stockholders, to secure the agreement above stated. It also appeared in the inventory that the deposit was "for security on loans made by the company upon which he [Hanauer] was indorser with other stockholders." Carnes testified that the stockholders were to get no return for the moneys paid by them to discharge the debts; and, although he did not seem to remember the extent of the debts when the contract was made, yet, in view of his testimony that but for the contract the company must have gone into receivership, and inasmuch as he himself, although less interested than Hanauer, seems to have paid $6,600 on account of his liability, the debts must have been considerable. Between December 19, 1889, and October 6, 1890, the executors made the payments referred to in the summary of disbursements as "loans to Brush Electric Company, $19,369.76." These payments are challenged as unauthorized loans, and, even if justified, as chargeable to the executors because not collected back. All the advances in question appear in the probate court settlements, as well as on the executor's cashbook. We think it fairly inferable that all the items (unless to the extent of $5,000) were paid on account of Hanauer's original liability under either indorsements of paper or the contract with the new electric company referred to. The $5,000 mentioned seems to have been advanced in four equal installments to the new company, two expressly appearing to be for building new plant, one for "bldg. under contract," and one as "advanced that company." The contract with the new company was not found, but it was Carnes' recollection that the new company was to build the new plant, and take payment therefor in bonds at 85 cents. The old site is said to have been taken by the selling stockholders from the old electric company "for so much money * * * toward the liquidation of outstanding indebtedness." The executors' inventory included 20 shares Memphis Gas Light Company stock, $2,000. No Memphis Gas Light Company bonds there appear. The estate is, however, given credit in the probate court settlements for $2,700 proceeds Electric Light Company bonds; $4,030 for proceeds of sale $6,500

bonds of Memphis Light & Power Company; $3,000 as proceeds of sales of $12,000 of stock in "Mfs. L. & P. Co." We are satisfied from the fuller indorsements in the executors' cashbook, and from testimony, that these items represented the sale at 25 cents on the dollar of the Memphis stock received in exchange for Brush Company stock, of $3,000 Memphis first mortgage bonds at 90, and $6,500 second mortgage bonds at 62 cents, that the prices so received were the fair market value, and that the stock and bonds so sold were those received by the executors in some way in connection with the dealings with the new company, including the exchange of Brush Company securities and claims, and probably advances for building new plant. Schoolfield sold his own stock at the same price and at the same time that Hanauer's was sold. No credit, however, appears on account of the $2,000 Memphis stock mentioned in the inventory, which does not seem to have been sold. The master found that at one time it had a market value of 42½ cents, but that the executors were not chargeable with failure to sell it. No charge was made against the executors on account of these various stocks, except to the extent to which the estate was found to have realized. Neither this action nor the credit given on account of the loans and advances were disturbed by the court. As it is not clearly shown that the wrong conclusion was reached by the court and master, we concur in the disposition made below.

Cotton Company Matters. This company had a capital stock of $1,000,000, issued as fully paid; in fact but a small percentage had been paid in. Hanauer held $54,000 of the stock, and was its president at the time of his death. Its capital was procured by loans from banks in Memphis and in one or more other places, upon indorsement by more or less of the stockholders, by agreement between whom each of a large number agreed to share, as between themselves, certain fractions of the net loss or liability, Hanauer's share being 1-11. At the time of his death he seems to have been indorser on as much as $100,000 of this paper. The company was then solvent so far as shown by its books, but its stock was speculative and had no real market value, properly speaking; the stock value consisting largely of patent rights on delinting machinery, etc. The master found, and we think properly, that the company was in fact insolvent when Hanauer died. Within two years following Hanauer's death his executors advanced to or for the benefit of the company $31,000. Certain other stockholders also made large advances. Complainants seek to charge the executors with the loss of Hanauer's capital stock, which was never realized upon, as well as the $31,000 so advanced. The master and the court held the executors not liable for the stock; the master charged the executors with over $14,000 of the $31,000 advanced, the court overruling the master in this latter respect. We think it clear that the executors should not be charged with the stock. The question of the loans charged up by the master is not so clear, but we are disposed to agree with the court. The basis of charging the item of $3,500 to the executor is that the item is not on the cashbook and is not accounted for. As we construe the record, the item was never in fact credited to the executor. We understand, however, that the charge was not in fact

stricken out in the master's final restatement of the account. The reasons for both these last conclusions are stated in the margin.[5]

The basis on which the master charged the other items to the executors is that there is nothing to show that they were anything but straight loans, and that the executors did not claim otherwise. It is true that neither the cashbook nor the executors' reports show that these advances were on account of Hanauer's liability, but it must be remembered that the accounting was had after the parties having immediate knowledge were dead; and while the question is not free from difficulty, we are inclined to the view that the action of the master failed to give due credit to the prima facie effect of the probate court settlements. Schoolfield was a large stockholder, and Poston, as Hanauer's representative, also took part in the corporate affairs. Every reasonable effort seems to have been made to save the concern from ruin, but without success. A fire in 1894 consumed the plant, and, as it turned out, the company's debts were about $200,000 more than its assets. Several other stockholders lost heavily, at least one much more than the Hanauer estate, and several were rendered bankrupt or insolvent. We are disposed to think that these facts, in connection with the probate court settlements, raise a presumption that the advancements in question represented in substance, directly or indirectly, the fulfillment of the obligations so incurred by Hanauer and existing at his death; having in mind the probability that certain of the indorsers proved uncollectible in part at least. We think the record fairly justifies the inference that in making the advancements and carrying the stock until the company's failure the executors used their best business judgment, and took the course followed by prudent stockholders representing their own investments. Whether or not anything was saved by the course taken, we are satisfied nothing was lost by it.

It results from what has been said earlier in this opinion that complainants in the cross-bill have had the substantial equivalent of a separate and distinct accounting relative to the sums due them as legatees under the eighth item.

It is also urged that stocks and bonds in large amounts were sold by the executors at sums below their real value; that many of the securities sold should not have been sold at all, as not needed for the payment of debts and expenses, but should have been kept as permanent investments, for assignment to the beneficiaries under the sixth

[5] But one item of $3,500 was included in the $36,195.05 credited the executors in first annual settlement. R. 496, 1793. This one item ($3,500) was included in making up balance of $5,010.30, September 1, 1890. R. 497. It was on the cashbook (R. 137), and helped make up the balance of $4,999.42, September 2, 1890 (R. 143), which varies from the probate court balance only in including item of $10.88, September 2, 1890. Had there been included a second $3,500, the balance shown on probate court record and cashbook could not have thus harmonized. The court, therefore, correctly ordered the charge to the executors stricken out. This was not done as to the principal ($3,500). R. 1490. The reason given was that the item was already allowed in the cash balance. This we think is a mistake. The cash balance used in making up the master's special account was $1,160.40 (R. 988), which included but the one item of $3,500 actually paid, the resulting balance to be distributed, $153,759.90 (R. 988) being included in the master's restated account (R. 1488).

and eighth items, and that certain stocks, if to be sold at all, should have been sold earlier, when, it is urged, a higher price could have been obtained. In this connection it is insisted that the stocks were inventoried at par, and that the burden of sustaining sales below par is upon the executors. But this argument overlooks, not only the prima facie effect of the probate court settlements, but, we think, misconceives the basis of the inventory. This, it is true, contains the statement, "and the stocks and bonds herein inventoried are at their face value." But this could scarcely have been intended as an appraisal at such value, for not only was there no formal appraisement of any property in the inventory except a few hundred dollars worth of personal effects at testator's residence, but the inventory contained many stocks worth, and doubtless known to be worth, at the time much more than par, one stock actually selling at about six times its face, and, on the other hand, it included stocks at the time considered worthless or worth much less than par; for practically contemporaneously with the filing of the inventory a copy thereof was furnished to the representatives of the beneficiaries under the eighth item, containing the executors' notations on many of the stocks, such as "good," "worthless," "nominal," "quoted 50 cents," "good—110 bid," "probably about at 5 cents," "130–135," "600," etc.

[14] Again, section 3979 of Shannon's Code is invoked, which requires the executor "to make sale of the goods and chattels of the deceased to the highest bidder, on ten days' notice of the time and place of sale," as forbidding private sales. Whether the Supreme Court of Tennessee has construed this statute as including corporate stocks in the terms "goods and chattels" we are not advised; but we think it not controlling of the executors' discretion under the will in question, and inapplicable to an estate held under such trusts as exist here. Moreover, upon the evidence in this record as to the value of the stocks sold, so far as given, there is reason to believe that the stocks brought a better price at private sale than could have been realized by an auction sale under the statute. We are satisfied that the great bulk of the sales of stocks and bonds were made at their fair market value, and all in the exercise of the discretion which a reasonably prudent and intelligent man would have used in the administration of his own affairs. This we conceive to be the applicable test. Mickel v. Brown, 63 Tenn. (4 Baxt.) 468.

Many of the stocks held by the testator were more or less speculative in character. Before ordinary administration could well be completed a commercial stringency began which continued with greater or less force for several years, and which presumably affected Memphis as much as the country generally, and perhaps in some ways more, on account of the depression of the cotton industry. These facts doubtless contributed materially to the losses and disappointments occasioned the estate, both in respect of realizing on investments and in the subjection to payment upon collateral liabilities. We have found nothing in the record which impugns the integrity and good faith of the executors in their dealings with the administration of the estate. We think it makes no difference that certain of the stocks may have been sold for purposes of payment to the beneficiaries under the sixth and eighth

items. Such sales may properly be regarded as made by the trustee and within the discretion vested by the will.

Without discussing each of a large number of individual items involved, we content ourselves with saying that we have carefully considered them all, and that, under the application of the rules stated in this opinion, the conclusions of the master and court should not be disturbed except in the instances to which we shall refer.

The contention that large sums shown by the executor's settlements and cashbook to have been realized, or which were stated by the master in his report to be chargeable to the executors, were not in fact so charged rests upon misapprehension of the master's accounts and schedules. It is enough to say that, as we understand these accounts and schedules, every item so charged the executors in their reports, or on the cashbook or allowed by the master, was so charged by that officer either by inclusion in the accounting which resulted in the cash balance of $1,160.40 against the executors, before referred to, or by addition to that cash balance through which the ultimate rights and liabilities of the parties were reached.

Cotton Exchange Building Company Stock. This stock had a par value of $500. There was testimony that it was worth 70 to 75 cents. The master held it not accounted for, and charged the executor $375 and interest. This action was excepted to on the ground that the stock was sold September 13, 1889, for $445, and erroneously accounted for as "cotton exchange membership." The exception was sustained, and we think erroneously. There was proof that the membership also had value, and if the stock was accounted for, the membership was not. Moreover, while in the copy of inventory furnished by the executor the stock bore the latter's notation "50 to 60 cents," the membership was minuted "sold $445.00" (no value being carried out in the original inventory). The order sustaining the exception should be reversed, and the master's action affirmed.

Personal Property at the Kerr Avenue Homestead, $842.15. We think the master and the court properly charged this item to the executor. It was the one class of inventoried property actually appraised. The executors apparently understood it had to be accounted for, and this result is not impeached by the alleged fact that it remained in the homestead and so was used by the beneficiaries under the sixth item. The fact that it was not specified in the bill cannot be held fatal. The master took the proof apparently without objection, and it would have been open to the court upon exception to amend the order to meet the proofs.

[15] It is urged that under sections 4012 and 4481 of Shannon's Code claims of resident creditors could be paid only within 2½ years, and claims of nonresident creditors only within 3½ years after letters testamentary are granted, and that the executors had no right to sell to meet claims not paid until after those dates, and were not entitled to credit for payments so delayed. But in the absence of proofs to the contrary, the presumption is that the delay beyond the statutory period was at the request of the executor. Alvis v. Oglesby, 87 Tenn. (3 Pickle) 172, 10 S. W. 313; Allen v. Shanks, 90 Tenn. (6 Pickle) 359, 16 S. W. 715. In this case the presumption is not only not overthrown,

but is confirmed. Section 4015, providing for payment to the state treasurer of unclaimed estates, has plainly no relation to the estate and will under consideration.

Taxes and Insurance Paid for Residuary Legatees and Beneficiaries. The payments are shown by the cashbook and by the settlements, except (as to the latter) a few payments made after the 1903 settlement. There is nothing to impeach the presumption afforded by the settlements, and we are satisfied that the payments were all in fact made as claimed. As to the advances for the legatees under the eighth item, it is immaterial that the executors, as distinguished from the trustees, were not concerned in the payment of taxes on lands belonging to the beneficiaries, for the record amply supports the inference that the payments were made with the knowledge and approval of these legatees, and were properly treated as advancements on account of their distributive shares of the estate.

The advancements made to Mrs. Hampson stand on a materially different footing only so far as they affect the question of encroachment on the corpus of the estate.

We see no merit in the suggestion that the question of equalization between beneficiaries was not referred to the master. It was necessarily involved in the accounting. Nor do we think there is force in the point that the executors had nothing to do with the equalization, but that this duty belonged to the trustees, in connection with the division of the residue after the payment of debts, etc.; for the executors were also the trustees and were acting in a double capacity. Adams v. Gleaves, 10 Lea (Tenn.) 367, 384; Porter v. Moores, 4 Heisk. (Tenn.) 16.

Compensation to Executors and Attorney's Fees. These allowances are criticized on several grounds. The contention that no allowance for services and expenses not rendered or incurred within two years after administration granted can validly be made the executors (Shannon's Code, § 4047) is disposed of by the construction put upon that statute as being directory merely. Willeford v. Watson, 12 Heisk. (Tenn.) 476; Murgitroyde v. Cleary, 16 Lea (Tenn.) 539, 546. The objection that the surviving partner is not entitled to compensation for settling the affairs of the copartnership is answered, and we think correctly, by the master, that it does not appear that any of the credits allowed Schoolfield, executor, were for services rendered with reference to the partnership assets until after the same had been turned over to the executors, and by them held and managed with the remaining assets of the estate.

[16] The proposition, assuming it to be correct, that the statute contemplates the fixing of the executors' compensation only at the end of administration is not controlling. The master found that the probate court had allowed compensation on the basis of 5 per cent. commission, and made his subsequent allowances at that rate. We think that, in view of the difficulties connected with the settlement of the estate, and the attention apparently given to it by the executors, the allowance made is not unreasonable. Our attention is called to nothing in the record which we think seriously impugns the reasonableness of the attorney's fees paid. It is perhaps not clear whether the compensation

allowed D. H. Poston's estate after his death was for services as executor merely or as attorney (see summary of receipts and disbursements printed in note to this opinion), but an executor acting as attorney may also recover compensation as such. Fulton v. Davidson, 3 Heisk. (Tenn.) 614, 643.

[17] We are satisfied to affirm the action of the master and court with respect to the allowances both as to executors' compensation and on account of attorney's fees.

The contention that the claims of Flora Loeb and Jacob Hanauer are barred by limitation rests upon the proposition that their rights of action accrued at the respective dates when these claimants reached the age of 21 years, viz., in 1889 and 1893, respectively. But in view of the fact that distribution was not to be had until completion of administration, if we have properly concluded that such completion was rightly delayed to the extent it was, and so as to protect the executors from liability therefor, we are unable to see why the claimants are not likewise protected against the barring of their claims for the residue after administration completed. Schoolfield died in 1905. The bill was filed in 1907. As late as 1903, as shown by the probate court settlements and cashbook, payments of taxes were made for the account of these beneficiaries, as well as amounts paid them in equalization of their shares to that date.

Complaint is made that there has been no accounting respecting firm assets. The record shows: That on April 1, 1889, the credits of the various partners, as appearing upon the firm books, were as follows: Schoolfield, $96,752.07; Hanauer, $97,859.13; Miller, $75,930.42. That between that date and June 3, 1896, the partners received such amounts as to leave the following credit balances: Schoolfield, $35,-695.99; Hanauer, $37,770.98; Miller, $36,495.90. These three partnership accounts seem to have represented the entire assets of the firm. Whether the assets so represented included the Ferguson & Hampson account afterwards merged in the sale of Nodena Plantation is not clear.

The master reported the amount of cash received by the executor from the surviving partners and the amount of rents collected from partnership realty. He reported as still on hand and undisposed of two parcels of described real estate in Shelby county, Tenn., and that Miller had made such conveyance upon receipt of his interest in those lands as that Schoolfield and the Hanauer estate owned the parcels in equal shares. He also reported that the lands in which Hanauer's estate was interested in Alabama and Arkansas are so vaguely described that definite and clear report could not be made as to what had been sold and what parts, if any, remained; that a large part of the assets of the firm had been accounted for in various partial settlements by the executor with the probate court; that some of the firm's books could not be found; that he was unable to make any findings as to the assets that remained as shown by the firm ledger, nor to equalize the partners, so far as the Hanauer estate is concerned, and found that all the accounts shown on the trial balance taken from the firm's ledger are worthless, except what has been accounted for through the probate court.

There is no suggestion that the firm still owes any debts, nor have we been cited to any testimony throwing any light upon the accounting as between the partners, except as shown by what we have already stated. Taking into account the division of the proceeds of sale of the Front street store and the treatment of the Nodena Plantation matters, the partnership affairs have presumably been regarded as requiring no further settlement, except to the extent of adjusting the balances between partners upon the basis which this record permits, and of providing for the sale of the remaining assets, so far as necessary, to effect such distribution and adjustment. It seems proper that the decree should formally determine the equalization as shown by the account balances referred to, and provide, so far as necessary, for enforcing, against remaining assets, the balances mentioned, as well as all other recoveries on account of partnership matters.

Dudley T. Schoolfield, executor, complains that the decree does not direct that he recover against Mrs. Hampson's executor and the other complainants the amount found by the master's restated account to be owing by them. As we construe the record, the order of the court on the master's restated account has the effect of establishing the result of the accounting as between the parties. The cross-bill filed by the executor was dismissed as unnecessary, or, if necessary, as brought too late, being filed after the master's report upon the accounting. We think the decree should show the final state of the account and direct recovery accordingly, except that it should not invade the possession of assets under the jurisdiction of the probate court for the purpose of administration. Waterman v. Canal-Louisiana Bank, 215 U. S. 33, 30 Sup. Ct. 10, 54 L. Ed. 80; Eddy v. Eddy (C. C. A., 6th Cir.) 168 Fed. 590, 93 C. C. A. 586. What the balance in favor of either party may be depends upon the restatement of the account under the rules we have laid down in this opinion. In determining rights as between defendants and Mrs. Hampson's children, the ultimate beneficiaries under the sixth item, we think the latter entitled to recover the amount of encroachments (if such shall prove to have been created) upon the principal of the estate otherwise apportionable to the children in question, and resulting from payments to Mrs. Hampson of funds chargeable only to income. We do not think the case is brought within the rule invoked that where the will evidences an intent to provide an income sufficient for the support of the beneficiaries, the principal may be encroached upon in case the income is palpably insufficient for such support. Lenow v. Arrington, 111 Tenn. 720, 723, 69 S. W. 314. Assuming (but not deciding) that the will contemplated encroachments upon the principal where necessary for support, and assuming that Mrs. Hampson had no income from the real estate belonging to her or to the trust estate (except the use of the Kerr avenue homestead), we cannot say that she needed to encroach upon the principal of the trust. In the seven years between testator's death and the failure of the Schoolfield-Hanauer Company about $18,000 of her individual personal estate, as well as about $5,000 representing claimed income from her net interest in the testator's estate, were applied upon her account with the Schoolfield-Hanauer Company (and thus in effect applied to the support of herself and children), to say nothing of the large balance

on account left standing against her. Of course, no encroachments could result from conveyances to the trustee, under the sixth item, of Nodena Plantation, the Kerr avenue homestead, the real estate allotted under partition proceedings, or from the application of Mrs. Hampson's property, held independently of the will, upon the Schoolfield-Hanauer account or otherwise.

It appearing that Miller's administrator received no assets and understands that the estate has none, complainants were not prejudiced, as the record now stands, by the dismissal of the bill as to the administrator.

The master relieved the executor and trustee from interest on funds of the estate in his hands from time to time and in bank at his death; as to the first, because very little was on hand at a time, and the account was active; as to the latter, because complainant could have had a successor trustee appointed without delay. We are content to approve this course as to the balances shown by the executor's accounts as in his hands, without, however, affecting the subject of interest upon special items otherwise directed by this opinion.

To discuss each of the large number of propositions presented by counsel would unwarrantably extend this opinion. We have, however, considered them all, and have omitted reference to none involving, as we think, prejudicial error.

The decree of the district court is affirmed as concerns John H. Wade & Sons' title to the Front Street lot and Edith Brooks Schoolfield's title to the Townsend land, with costs of this court in favor of those appellees, as well as Mr. and Mrs. Norfleet, against complainants and cross-complainants. In other respects the decree should be modified to the extent only we have indicated.

The record will be remanded to the district court, with directions to take further proceedings not inconsistent with this opinion.

Complainants and cross-complainants will recover the costs of this court against appellees other than Wade & Sons, Edith Brooks Schoolfield, and Mr. and Mrs. Norfleet.

On Petitions for Rehearing.

Rehearing is asked by Dudley T. Schoolfield and Mrs. Norfleet, and by John H. Poston and Mrs. Hill as sureties on the executor's bond. One point, perhaps, requires specific mention. By our opinion, Mr. Schoolfield was allowed credit on the accounting for $4,796.24, with interest thereon, as his share of the foreclosure sale price of Nodena Plantation. We are asked to determine definitely the interests of Mr. Schoolfield and Mrs. Norfleet in the plantation, and to declare each of those parties entitled to a share of the property and to an accounting for profits. Our opinion, at least impliedly, determines Mr. Schoolfield's rights as limited to the accounting credit stated. To this we adhere.

Even were we to disregard his failure to claim in this suit an interest in the plantation, except by cross-bill (which was dismissed by the court below) filed after the coming in of the commissioner's report under the order for accounting, we think the relief directed by our opin-

ion all he is entitled to, in view (if for no other reason) of the transaction evidenced by the conveyance by Schoolfield and Poston, trustees, to W. W. Schoolfield, trustee under the sixth item of the will, of all title and interest vested in the trustees under the commissioner's foreclosure deed, and W. W. Schoolfield's participation in such conveyance. Nor is it maintainable that the value of the testator's interest in the plantation was regarded as $70,815.02, instead of $35,407.51. The former figure is far in excess of the entire advances to the beneficiaries under the eighth item, as shown by the schedule of trustee's receipts and disbursements contained in our opinion; while the latter amount, added to the amounts advanced for Mrs. Hampson's account (aside from the so-called personal account representing the testator's liability to her), is but a few hundred dollars less than advanced to the beneficiaries under the eighth item.

The five years' rent of plantation, with interest, was intended to be applied, as the master applied his award on his account, for the benefit of both classes of beneficiaries, and not against the item of $21,114.60.

Mrs. Norfleet's claim was not considered by the court below, and she has not appealed. The decree was affirmed without prejudice to her rights. We cannot properly go further.

All the other points raised are covered by our decision. A careful consideration of the arguments advanced fails to convince us that the decision is wrong.

The petitions for rehearing are denied.

(217 Fed. 719)

SOUTHERN PINE LUMBER CO. v. CONSOLIDATED LOUISIANA LUMBER CO.†

(Circuit Court of Appeals. Fifth Circuit. October 5, 1914.)

No. 2490.

PUBLIC LANDS (§ 173*)—TEXAS SCHOOL LANDS—LANDS SUBJECT TO SALE—CONSTRUCTION OF STATUTE.

Act Tex. April 15, 1905 (Laws 29th Leg. c. 103) § 8, providing for the sale by the Commissioner of the General Land Office of public lands of the state set apart by prior statutes to the public school fund, does not authorize the Commissioner to place upon the market or sell lands claimed adversely to the state and to the school fund in good faith under Spanish or Mexican grants until the controversy between the state and the claimants has been adjudicated in favor of the state.

[Ed. Note.—For other cases, see Public Lands, Cent. Dig. §§ 544–551; Dec. Dig. § 173.*]

In Error to the District Court of the United States for the Eastern District of Texas; Gordon Russell, Judge.

Action at law by the Consolidated Louisiana Lumber Company against the Southern Pine Lumber Company. Judgment for plaintiff, and defendant brings error. Reversed.

This suit was brought by the Consolidated Louisiana Lumber Company, hereinafter referred to as the Consolidated Company, a Louisiana corporation, against the Southern Pine Lumber Company, a Texas corporation, here-

*For other cases see same topic & § NUMBER in Dec. & Am. Digs. 1907 to date, & Rep'r Indexes

† Rehearing denied February 8, 1915.

inafter designated the Southern Company, to recover damages for the alleged wrongful conversion of timber cut, removed, and appropriated by the latter company from seven surveys of land situated in Trinity county, Tex., located and patented under a file made by Robb Stevenson, July 5, 1905, on top of the south league of the Jose A. Sepulveda grant, under which the Southern Company claimed title and the right to cut and remove the timber in question. The Southern Company filed a cross-action, making Henry B. Fall defendant; but, in view of the disposition made of the case, the cross-action becomes a matter of little importance.

Stevenson sought to purchase the land and timber thereon under and by virtue of section 8 of an act of the Texas Legislature, approved April 15, 1905. Session Acts, p. 159, c. 103. Under this file a survey was made by the county surveyor of Trinity county September 18, 1905, embracing 4,287½ acres and covering the south Sepulveda league, that was afterwards subdivided into the seven tracts in controversy. The surveyor's report showed a list of settlers, naming 19, who had improvements and inclosures on scrap school land known as the Sepulveda south league in Trinity county. On June 30, 1906, the county surveyor filed in the General Land Office at Austin field notes of the seven surveys, and on September 1, 1906, the Land Commissioner notified Stevenson that a survey had been made and that he had the right for 60 days to purchase the land and timber. Thereafter, Stevenson having made application to purchase the land and timber, and having complied with the statute as to the payment of the purchase money and in other respects, patents were issued to him in the name of the state for each of the surveys.

The record discloses that the Consolidated Company exhibited a chain of conveyances from Stevenson to itself, conveying the said several surveys with the timber thereon and all causes of action and claims for damages on account of cutting timber or committing other trespasses thereon. The Southern Company in defense relied upon a grant that had been issued to Jose Antonio Sepulveda upon a concession, made by Jose A. Saucedo (sometimes written Sancedo), a political chief of Mexico, in 1824, and afterwards confirmed by him in 1826. The Sepulveda concession was for two leagues of land, one to be located on San Pedro creek and the other on the Cochino; but, because one of the leagues applied for conflicted with the survey of Daniel McGulen, the alcalde, by virtue of an agreement between the interested parties, placed Sepulveda in possession of two leagues on the Cochino creek.

For a better understanding of the questions involved, the following substantially correct statement of the case by the Southern Company is here inserted:

"As shown by copy of the grant hereinbefore set out, Jose A. Sepulveda made application to the honorable political chief of the province of Texas, June 1, 1824. On July 20, 1824, Jose Anto. Saucedo acted on the application for two leagues of land and passed it to the alcalde of Nacogdoches, with instructions to see if the land was vacant, and, if so, 'to grant to the petitioner, Jose Antonio Sepulveda, and put him in possession, in the name of the government of the Mexican federation, of the two leagues that he solicits,' etc. On January 3, 1826, Sepulveda addressed another communication 'to the Honorable Chief of the Department of Texas,' complaining because one Daniel McGulen had prevented his being placed in possession of one of the leagues. Thereupon Saucedo entered the following order: 'San Fernando de Bexar, February 15, 1826. Considering that the interested party obtained through competent authority an order to be put in possession of the two leagues treated of in the foregoing petition, the alcalde of Nacogdoches should not have placed Daniel McGulen in possession of that which is situated at San Pedro. Therefore, pass to the present alcalde of that town, in order that he may have it vacated and put the petitioner in possession of the said two leagues in accordance with the decree of the political chief of this province. [Signed] Saucedo. [Rubric.]'

"Based on these orders, Luis Procela, the citizen constitutional alcalde of Nacogdoches, placed Sepulveda 'in possession of two leagues of land which according to said decrees he orders to be granted to said Sepulveda, one on San Pedro creek and the other on said Cochino; and for the reason that Daniel McGulen was already settled at San Pedro, having built houses and made

fields, the two parties saw fit to agree that there be given to said Sepulveda the two leagues together on the Cochino creek, so as to avoid all discord that could have been between them. The said agreement having been had, I began to extend the first measurement from said creek course to the south, where 10,000 varas were completed and a white oak with sufficient marks was set as a landmark; then extended the course to the west, where 10,000 varas was completed and a white oak was set as a mark; then running the same measurement, course north, 10,000 varas were completed, where adequate signs were placed; then running the same measurement, course east, 10,000 varas were completed to where we commenced—it being contiguous on all sides with vacant lands.' The alcalde placed Sepulveda in possession of said land, according to the grant, on the 16th day of March, 1826.

"Jose A. Sepulveda conveyed his grant to Samuel Maas by deed dated September 7, 1838, for a recited consideration of $5,000. Samuel Maas in turn conveyed by quitclaim deed to Jesse Duren and Daniel Daly, July 13, 1857, said two leagues, reserving out of the same the following tracts: 'Covered by several land certificates or headright claims known as the Alexander Henry claim, consisting of two-thirds of a league and one labor, for which patent was obtained for M. Seeligson and Maas, August 3, 1847; also the John Appleman claim, consisting of seven and one-third labors, patent obtained July 3, 1847; also Jacob Buhl.' Said Henry Appleman, and Buhl surveys were in partial conflict with the north league of said Sepulveda grant.

"Jesse Duren and Daniel Daly, and those holding under them, made numerous conveyances of portions of the south league of the Sepulveda grant, it being the portion covered by the Stevenson surveys in controversy, to a number of people, who put their deeds of record, paid taxes, and established their homes thereon; many living thereon for periods ranging from 10 to 50 or 60 years. It is not material here to trace their titles. It was admitted by plaintiff 'that the defendant Southern Pine Lumber Company had acquired, before file was made by Robb Stevenson on the surveys in controversy, whatever title Daniel Daly and Jesse Duren had to the timber which was in controversy, acquiring the same through a number of mesne conveyances, and that some of the deeds to the Southern Pine Lumber Company conveyed land and some timber on it, as set out in the defendant's answer.' It was further admitted 'that there are all told something over one hundred and twenty-five deeds in the chain of title set up by defendant to the various tracts of land and timber claimed by it, which have been from time to time filed and placed of record in Trinity county, Tex., at dates ranging from 1858 or 1859 to the present, but the bulk of them being placed of record since 1873. The intent of this admission is not to admit that the defendant in fact acquired title through this deed, but is to admit that they acquired whatever title Jesse Duren and Daniel Daly had to the land in controversy.' "

As disclosing the state's recognition of the Sepulveda grant, the statement of the Southern Company proceeds:

"As shown by the depositions of J. T. Robinson, Commissioner of the General Land Office, the Sepulveda two-league survey is delineated on the map of Houston county of 1841, the map of Houston county of 1858 and 1859, the map of Trinity county of 1862, the map of 1868 and 1877, the map of 1882, the map of 1896, and the present official map. He testified in part as follows: 'There is a map in this office bearing the following title: "A Map of Houston County" (copied from a map by George Aldrich by H. L. Upshur, draughtsman General Land Office, 1841). The J. A. Sepulveda title appears delineated on this map.' * * * 'The next map upon which I find the J. A. Sepulveda title delineated is that of Houston county of 1858 and 1859, by C. C. Stremme.' 'The next map upon which I find the J. A. Sepulveda title delineated is that of Trinity county, which according to its title was compiled by J. Browne in May, 1862, and drawn by R. Ricchel in June, 1862.' 'The next map upon which I find the J. A. Sepulveda title delineated is a tracing labeled "Houston County, December, 1877."' 'The next map upon which I find said J. A. Sepulveda title delineated is that of Houston county, dated October, 1868.' 'The next map upon which I find the J. A. Sepulveda title delineated is that of Trinity county, of date 1882.' 'The next map upon which I find the J. A. Sepulveda title delineated is the present map of Trinity coun-

ty, dated August 10, 1896, by Hill.' 'Said Sepulveda title is also delineated on the present official map of Trinity county of September, 1905.'"

The following correspondence between Messrs. Nunn & Nunn, Attorneys at law, and the Commissioner of the General Land Office, is disclosed by the record:

"Crockett, Texas, October 17, 1902.

"Hon. Charles Rogan, Austin, Texas—Dear Sir: You will please furnish us at your earliest convenience with information as to when the J. A. Sepulveda two-league grant of land in Trinity and Houston counties was first put upon the maps in your office, and also, if you can, explain why this grant for two leagues of land, with measurements embracing four leagues, should be put upon the map at all. Of course, it was done before you entered office; but we suppose an examination of the papers there will give us some information on this subject. We should like to know by what surveyor and at whose instance and when this map was made showing this land to be located. We do not think their lines could ever be located by the grant, and we must think that there has been some mistake about this matter.

"Yours truly, Nunn & Nunn."

To which the Land Commissioner replied as follows:

"Messrs. Nunn & Nunn, Crockett, Texas—Dear Sirs: Replying to yours of October 17th last, would advise that the two leagues of the J. A. Sepulveda appear on all the old maps of Trinity county in this office, and on map of 1862 the claims appear as four leagues. As to when same was plotted on the maps of this office we are unable to state. The Spanish translator will give you such information as he may have as to the whole. The application of Sepulveda was dated June 1, 1824; the cession of two leagues, July 2, 1824; the second application, January 21, 1826; the second cession, or confirmation of the first, on the 19th of February, 1826; active possession of final title, March 15, 1826. In the meantime the colonization laws were passed March 14, 1824, which restricted headrights of this class to one league. The southern league having remained without adverse location on the maps of this office, being in the form of a square, and on the original survey, will not be disturbed after so many years, but will be presumed to be the one chosen by the owner and acquiesced in by the government. The corresponding clerk who has charge of this character of work has been sick, which caused a delay in answering your letter.

"Very respectfully, Charles Rogan, Commissioner."

On April 25, 1862, the Commissioner addressed a letter, of which the following is a copy, to Hon. George F. Moore:

"George F. Moore, Esq., Nacogdoches—Dear Sir: Yours of the 15th inst. has been received. Contents noted. As there is no evidence of the title of Jose Antonio Sepulveda having been declared invalid by the courts, we will have to respect the title and not issue patent for any surveys that may have been made upon the land.

"Yours very respectfully, S. Crosby."

It is further shown by the record that the Sepulveda grant has been included as a titled grant in the abstracts of titled lands, published under authority of laws of the state; that taxes have been paid for a great number of years on parts of the land by several parties; that numerous claimants have asserted title under the Sepulveda grant by buying and selling lands and placing deeds upon the records; and that the state has issued a number of patents calling for the boundaries of the Sepulveda survey.

Upon the trial of the cause the court gave the following peremptory instruction in favor of the Consolidated Company:

"The court charges you as a matter of law that the plaintiff has established the fact that it was the owner of the timber in controversy, and that the defendant had no title thereto. You are, therefore, instructed to find a verdict for the plaintiff for the value of the timber cut and removed by the defendant from the land in controversy, and the amount of your verdict must be determined from the evidence before you under the instructions which the court will submit for your guidance."

Under the instructions of the court the jury returned a verdict for damages in favor of the Consolidated Company, and also gave damages to the Southern Company against Fall on the cross-action, and judgment was accordingly rendered thereon. To the instructions of the court the Southern Company duly excepted, and prosecutes error to reverse the judgment.

Cone Johnson, of Washington, D. C., J. M. Edwards, of Tyler, Tex., George C. Greer and Ben B. Cain, both of Dallas, Tex., R. O. Kenley, of Groveton, Tex., and Johnson & Edwards, of Tyler, Tex., for plaintiff in error.

E. W. Townes and Thomas H. Ball, both of Houston, Tex., T. N. Jones, of Tyler, Tex., W. D. Gordon, of Beaumont, Tex., and L. A. Carlton, of Houston, Tex., for defendant in error.

Before PARDEE and SHELBY, Circuit Judges, and MAXEY, District Judge.

MAXEY, District Judge (after stating the facts as above). It is a well-recognized principle of law that, in actions of trespass to try title, the plaintiff must recover upon the strength of his own title. If, then, the Consolidated Company exhibited a valid title in itself to the timber and land in controversy, the judgment was right. But if, on the other hand, the title relied upon by it was invalid, the judgment was wrong. We are thus brought to a consideration of the question of the validity or invalidity of the title exhibited by the Consolidated Company, and upon its solution will depend the result of the present suit.

To solve the question it becomes necessary to ascertain whether the Commissioner of the General Land Office of Texas had authority to place the land upon the market for sale and to issue patents to Stevenson; it being conceded that, if the authority existed, the patents passed an indefeasible title to Stevenson and to his remote vendee, the Consolidated Company.

The question suggested was directly raised by the Southern Company in the following requested instruction, which was refused by the trial court:

"The evidence in this case shows that the land and timber in controversy was not on the market subject to sale by the Commissioner of the Land Office at the time the applications were made to purchase the same, nor at the time the land or timber was awarded to Stevenson, nor at the time the timber deeds were executed or the patent to the land issued, and the act of the Commissioner in attempting to sell the land and timber was without authority of law and passed no title to the plaintiff, and the plaintiff cannot recover in this case, and you will find a verdict for the defendant."

It has been shown in the statement of the case that Stevenson made the purchase of the land and timber under section 8 of the Act of 1905, and it clearly appears that, in making his purchase, he complied with the provisions of the act. If the Land Commissioner had authority to place the land upon the market and sell the same, Stevenson's title was unassailable. Did he have such authority?

After carefully considering the question we have reached the conclusion that he did not have the authority claimed. Generally speaking, it may be said that he was invested with authority to sell the lands

belonging to the school fund as provided by the act of 1905; but where lands were held, occupied, or claimed by any person, association, or corporation adversely to the state, or to such fund, they formed no part of the school fund until their recovery by the state in a suit instituted by the Attorney General. Section 8, Act Feb. 23, 1900. See Session Acts 1900, First Called Session, pp. 33, 34. And we think this is especially true in respect of lands held or claimed by persons adversely to the state and to the school fund under Spanish or Mexican titles, since it is expressly provided in section 8 of the act of 1905:

"That land heretofore or hereafter recovered by the state from claimants holding or claiming same under Spanish or Mexican titles shall be considered as vacancies disclosed by the official maps, and the person who in good faith so held or claimed such land under the claim aforesaid shall have a prior right for ninety days after the taking effect of this act, or after the date of final recovery of such land hereafter, to file on and purchase four sections of six hundred and forty acres each for cash," etc.

In 1904 a similar question was passed upon by the Supreme Court of Texas in Juencke v. Terrell, Commissioner, 98 Tex. 237, 239, 82 S. W. 1025, 1026, in which was construed section 6 of the act of 1900. The reasoning of Mr. Chief Justice Gaines applies with peculiar force to the present case, and the opinion is inserted in its entirety:

"This is a motion for leave to file a petition for a writ of mandamus against the Commissioner of the General Land Office. The facts relied upon for the grant of the writ, briefly stated, are as follows: In the year 1904 the relator, desiring to purchase a tract of 640 acres of land in Liberty county under the act of April 15. 1901, amendatory of the sixth section of the act of February 23, 1900, which set apart the unappropriated public domain of the state to the public school fund and provided for its sale, filed his application to purchase, caused a survey to be made by the surveyor of the county, and the application and field notes to be returned to the Land Office. For the purposes of this opinion it may be assumed that all the requirements of the statute were complied with. The Commissioner refused to approve the field notes, and to classify and value the land, and to place it upon the market, because the survey was 'in conflict with what appears to be a prior and incomplete grant of a league of land made by the governments of the states of Coahuila and Texas to Phillip P. Dever.' The petition further alleges, in substance, that R. M. Vaughan and F. P. Works claim to be owners of, or to have some interest in, the tract sought to be purchased, and that they claimed under the incomplete grant before mentioned.

"We are of the opinion that, where there is a dispute as between the state and another party as to the title to a tract of land, the Commissioner cannot be compelled to make a sale. It is hardly within the scope of his functions or duties to pass upon titles in such cases; and we should be reluctant to hold that the Legislature intended to impose such duty upon him, in the absence of language in the statute showing clearly that intent. It is known that at the date of the original act which appropriated these lands to the school fund there were many large bodies of land lying in the state held by persons who asserted title thereto, and whose titles had never been adjudicated and were not conceded. It is unreasonable to suppose that the Legislature intended to put such lands upon the market for sale, and thus to turn loose upon the courts a flood of litigation as between the purchasers and the adverse claimants. On the contrary, we think that the purpose of the Legislature with reference to them is shown by the eighth section of the act. That section in part is as follows: 'When any of the lands described in this act, or any of the other public lands of the state held or owned by any fund, or any land in which this state or any such funds have an interest, are held, occupied or claimed by any person or association or corporation, adversely to the state, or to such fund, it shall be the duty of the Attorney General to

institute suit therefor,' etc. From this we think it is to be inferred that the policy of the Legislature in reference to lands which were claimed by third parties was first to establish its title before putting them upon the market for sale, and that it was not intended that they should be sold until the controversy between the state and the claimants had been adjudicated.

"The present Constitution contains this provision: * * * 'All genuine land certificates heretofore or hereafter issued shall be located, surveyed or patented only upon vacant and unappropriated public domain, and not upon any land titled or equitably owned under color of title from the sovereignty of the state, evidence of the appropriation of which is on the county records or in the General Land Office; or when the appropriation is evidenced by the occupation of the owner, or of some person holding for him.' Const. art. 14, § 2. This provision does not prohibit the Legislature from providing for the sale of such lands; but it very clearly evinces the policy of the state not to encourage litigation by permitting the acquisition from the state of lands which appear upon the official records, or by actual occupancy, to be claimed adversely to it. It should not lightly be assumed that the Legislature intended to depart from that policy.

"Our conclusion is that section 6 of the act under construction applied only to such lands as appeared upon the maps and records of the General Land Office not to be claimed by other parties and to such as had been adjudged to the state, if ever so claimed."

In view of the fact that the south league of the Sepulveda grant, the land involved in the present controversy, has been claimed adversely to the state since 1824; that it has been for more than half a century delineated upon the maps of the Land Office, and regarded by that office, or by some of its incumbents, as a valid grant; that there are, and have been for a number of years, numerous persons residing on the land, paying taxes and claiming under the Sepulveda title; and in view of other pertinent facts appearing in the statement of the case—it is, repeating the language of the Supreme Court, "unreasonable to suppose that the Legislature intended to put such lands upon the market for sale, and thus to turn loose upon the courts a flood of litigation as between the purchasers and the adverse claimants." We are firmly impressed with the conviction that it was the intention of the Legislature, as manifested by the acts to which reference has been made, to reserve from sale lands claimed adversely to the state and to the school fund in good faith under Spanish or Mexican grants, "until the controversy between the state and the claimants has been adjudicated" in favor of the state. In the absence of such adjudication the lands could not be legally placed upon the market for sale; and it follows that the act of the Commissioner in selling the land in question to Stevenson was against the law, and hence without validity.

We are unable to give our assent to the suggestion, made by the Consolidated Company, that the Legislature intended, either by the act of 1905, or by any subsequent legislation, to change or in any manner to modify the rule announced in Juencke v. Terrell.

It is further stated by counsel in their brief that the question here involved was determined in favor of the Consolidated Company by the Attorney General and Land Commissioner, and that the practical construction of those two officials is of great weight, and should be so regarded by a United States court in construing a state statute. In this connection counsel refer to G., H. & S. A. Ry. Co. v. State, 77

Tex. 367, 12 S. W. 988, among other authorities. In 77 Tex. at page 388, 12 S. W. 995, it was said by the court:

"But when, as in this case, seven successive Legislatures have through a period of 13 years acted upon a given construction of the Constitution; when the department intrusted with the immediate administration of the land system of the state has uniformly concurred in that construction, and when successive Governors of the state, eminent for their patriotism and intelligence (more than one of them having first served with distinguished success in this court), have approved it, we feel that nothing less than an absolute conviction that they have all been wrong would justify us in so deciding."

The principle announced is a salutary one, and would be readily applied in the present case, if the facts here involved were in the slightest degree similar to those appearing in the case cited. Without discussing the testimony, we deem it only necessary to say that the principle is wholly inapplicable to the case at bar.

Having reached the conclusion that the title of the Consolidated Company is without validity, and hence that that company must fail in the suit, it becomes unnecessary, as it would be improper, in the absence of real parties in interest, to determine whether the south league of the Sepulveda is a subsisting valid grant. Upon that question, therefor, we intimate no opinion.

In view of the foregoing, we are of the opinion that the trial court erred in refusing to give the instruction requested by the Southern Company, and for the error thus committed the judgment against that company and Fall should be reversed, and the cause remanded for a new trial. And it is so ordered.

NOTE BY THE COURT.—Some days prior to his death, Judge SHELBY communicated by letter his concurrence in the foregoing opinion.

(217 Fed. 757)

UNITED STATES ex rel. STATE OF LOUISIANA v. BOARMAN, Judge.

(Circuit Court of Appeals, Fifth Circuit. October 29, 1914.)

No. 2636.

1. COURTS (§ 365*)—PROCEEDING BY STATE TO COMPEL ALLOWANCE OF APPEAL.

A state, which by the decision of its own Supreme Court has no real or beneficial interest in lands in controversy in a suit in a federal court, *held* not entitled to maintain a proceeding for a writ of mandamus to compel the allowance of an appeal from the decree therein on behalf of one of its levee districts.

[Ed. Note.—For other cases, see Courts, Cent. Dig. §§ 950, 952, 955, 969–971; Dec. Dig. § 365.*

Mandamus in aid of appeals, see note to Lewis v. Baltimore & L. R. Co., 10 C. C. A. 450.]

2. APPEAL AND ERROR (§ 148*)—RIGHT OF REVIEW—PERSONS ENTITLED.

One who is not a party to a record and judgment is not entitled to an appeal therefrom.

[Ed. Note.—For other cases, see Appeal and Error, Cent. Dig. §§ 925–932; Dec. Dig. § 148.*]

Petition, on relation of the State of Louisiana, for mandamus and certiorari to Aleck Boarman, Judge of the United States District Court for the Western District of Louisiana. Rule to show cause discharged.

Ruffin G. Pleasant, Atty. Gen. of Louisiana, of New Orleans, La., for petitioner.

Edgar H. Farrar, of New Orleans, La., and Henry Bernstein, of Monroe, La., opposed.

Before PARDEE, Circuit Judge, and GRUBB and CALL, District Judges.

PER CURIAM. The application for a mandamus and certiorari to the judge of the Western district of Louisiana to allow an appeal on the part of and in behalf of the state of Louisiana from a decree rendered in the District Court of said district in the case entitled "Board of Levee Commissioners of the Tensas Basin Levee District v. Tensas Delta Land Company, Limited," is denied.

[1] 1. Under the decision of the Supreme Court of the state of Louisiana, reported in State v. Tensas Delta Land Co., Ltd., 126 La. 59, 52 South. 216, the Supreme Court of the state on full consideration decided that the state was without real or beneficial interest in the lands in controversy, and this decision is controlling in this court.

[2] 2. "One who is not a party to a record and judgment is not entitled to an appeal therefrom. Bayard v. Lombard, 9 How. 530 [13 L. Ed. 245]; Indiana R. Co. v. Liverpool, London & Globe Ins. Co., 109 U. S. 168 [3 Sup. Ct. 108, 27 L. Ed. 895]; Ex Parte Cockcroft, 104 U. S. 578 [26 L. Ed. 856]." In the Matter of Leaf Tobacco Board of Trade of the City of New York, Petitioner, 222 U. S. 578, 581, 32 Sup. Ct. 833 (56 L. Ed. 323).

Rule discharged.

*For other cases see same topic & § NUMBER in Dec. & Am. Digs. 1907 to date, & Rep'r Indexes

(217 Fed. 758)

YARYAN NAVAL STORES CO. v. B. BORCHARDT CO. et al.

(Circuit Court of Appeals, Fifth Circuit. October 28, 1914. Rehearing Denied December 4, 1914.)

No. 2669.

1. CREDITORS' SUIT (§ 47*)—MOTION TO DISMISS—ESTOPPEL.
A creditors' suit will not be dismissed, on the ground that complainant had an adequate remedy at law, after defendant has answered, admitting the indebtedness and equities of the bill, and consented to the appointment of receivers, who have incurred obligations and large expenditures.
[Ed. Note.—For other cases, see Creditors' Suit, Dec. Dig. § 47.*]

2. BANKRUPTCY (§ 20*)—CONFLICTING JURISDICTION OF COURTS.
A creditors' suit, looking to the liquidation of the affairs of a corporation, instituted more than six months prior to a voluntary bankruptcy proceeding by the corporation, is not necessarily affected by such proceeding.
[Ed. Note.—For other cases, see Bankruptcy, Cent. Dig. § 23; Dec. Dig. § 20.*]

Appeal from the District Court of the United States for the Southern District of Georgia; Wm. B. Sheppard, Judge.

Creditors' suit in equity against the Yaryan Naval Stores Company. From the decree obtained by the B. Borchardt Company and James S. Brailey, Jr., receivers, defendant appeals. Affirmed.

See, also, 206 Fed. 366.

Bolling Whitfield, of Brunswick, Ga., for appellant.

Max Isaac, Joseph W. Bennet, F. E. Twitty, and Millard Reese, all of Brunswick, Ga., and A. H. Heyward, of Macon, Ga., for appellees.

Before PARDEE, Circuit Judge, and GRUBB and CALL, District Judges.

PER CURIAM. [1] Where months after a creditors' bill has been filed, and the defendant has appeared and filed an answer admitting the indebtedness to the complainant and all the equities set up in the bill, and consented to the appointment of receivers, and where under orders of court receivers have entered upon the administration of the property of the defendant, incurring obligations and large expenditures, it is too late to urge that, inasmuch as the complainant's claim has not been reduced to judgment, the suit should be dismissed because the complainant had an adequate remedy at law. See Hollins v. Brierfield Coal & Iron Co., 150 U. S. 371, 380, 381, 14 Sup. Ct. 127, 37 L. Ed. 1113; Brown v. Lake Superior Iron Co., 134 U. S. 530, 10 Sup. Ct. 604, 33 L. Ed. 1021; Reynes v. Dumont, 130 U. S. 354, 9 Sup. Ct. 486, 32 L. Ed. 934. And see Fed. Rep. Dig. vol. 7, Eq. § 53.

[2] Inasmuch as the equity proceedings looking to the liquidation of the affairs of the Yaryan Naval Stores Company were instituted more than six months prior to the alleged voluntary bankruptcy proceedings, wherein it is claimed the Yaryan Naval Stores Company was adjudicated a bankrupt, the proceedings in the District Court in this

*For other cases see same topic & § NUMBER in Dec. & Am. Digs. 1907 to date, & Rep'r Indexes

case were not necessarily affected. See Pickens v. Roy, 187 U. S. 177, 23 Sup. Ct. 78, 47 L. Ed. 128; Metcalfe v. Barker, 187 U. S. 165, 23 Sup. Ct. 67, 47 L. Ed. 122; Eyster v. Gaff, 91 U. S. 521, 23 L. Ed. 403; In re Heckman, 140 Fed. 859, 72 C. C. A. 8 (C. C. A. 9); Sample v. Beasley, 158 Fed. 607, 85 C. C. A. 429 (C. C. A. 5).

On the record we find no reversible error in the proceedings of the lower court. The decree appealed from appears to have been regularly rendered in due course of proceedings, and the same is affirmed.

(217 Fed. 759)

ERIE BAKING CO. v. HUBBARD MILLING CO.

(Circuit Court of Appeals, Third Circuit. November 10, 1914.)

No. 1847.

SALES (§ 384*)—BREACH OF CONTRACT—GOODS TO BE MANUFACTURED—DAMAGES.

Plaintiff contracted to sell and deliver to defendant 10,000 barrels of flour to be manufactured. Plaintiff purchased wheat from which to make the flour, but after the first shipment defendant wrongfully refused to accept further deliveries. In the meantime wheat had declined in price. *Held* that, upon such facts, the usual measure of damages for breach of sale contracts would not compensate plaintiff, which was entitled to recover the amount of the decline in the value of the wheat between the time it was bought after the making of the contract, and the breach of the contract.

[Ed. Note.—For other cases, see Sales, Cent. Dig. §§ 1098–1107; Dec. Dig. § 384.*

Contracts for sale of things to be produced or manufactured, see note to Star Brewery Co. v. Horst, 58 C. C. A. 363.]

In Error to the District Court of the United States for the Western District of Pennsylvania; Charles P. Orr, Judge.

Action at law by the Hubbard Milling Company against the Erie Baking Company. Judgment for plaintiff, and defendant brings error. Affirmed.

T. A. Lamb, of Erie, Pa., for plaintiff in error.

Alexander J. Barron, of Pittsburgh, Pa., for defendant in error.

Before BUFFINGTON, McPHERSON, and WOOLLEY, Circuit Judges.

J. B. McPHERSON, Circuit Judge. In this suit the Hubbard Milling Company, of Minnesota, charged the Erie Baking Company, of Pennsylvania, with breaking a contract made in September, 1910, to accept 10,000 barrels of flour at an agreed price. Deliveries were to be made during the five months immediately following, and the flour was to conform in quality to a specified standard. Of the first installment 750 barrels were shipped, accepted, and paid for, but (although they were tested and accepted) the Baking Company declared itself not satisfied with the quality, and on October 24th announced its refusal to go on with the contract. The principal dispute at the trial was over

*For other cases see same topic & § NUMBER in Dec. & Am. Digs. 1907 to date, & Rep'r Indexes

the quality of the 750 barrels, and the verdict of the jury has settled that question in favor of the Milling Company.

The only controversy upon this writ of error is about the proper measure of damages. At the time the contract was made the Milling Company did not have the flour on hand, so that the parties agreed, not upon the sale of an article already made, but upon the manufacture and sale of an article not yet in being. For the breach of such a contract it is apparent that the measure of damages generally applied —namely, the difference between the price agreed upon and the market price at the time of breach—may not properly compensate the manufacturer, and in that event another measure that will compensate him should be applied. What the measure is to be will depend on the facts of the particular case. The evidence here shows that the Milling Company went into the market immediately upon the making of the contract and bought wheat for future delivery in sufficient quantity to meet its obligation, and when the Baking Company unlawfully broke the contract this raw material was either in the Milling Company's possession or was to be delivered under agreements that had already been made and were only awaiting execution. When the cancellation of the contract was announced, the price of wheat had gone down, and for this loss—9½ cents a bushel—the Baking Company was properly charged. The verdict is simply for this amount with some further deduction.

But in the charge of the court the jury were instructed that the plaintiff was entitled to recover, not only the loss referred to, but also the profit that the plaintiff would have made if the contract had been fully completed and all the flour had been manufactured. This instruction is specially attacked as erroneous, and much of the oral argument was devoted to this subject. On the present record, however, the question is academic, and we do not feel bound to discuss it. The verdict made no allowance for profits, and the defendant has therefore suffered no injury, even if the instruction complained of were erroneous—a matter about which we intimate no opinion whatever.

The measure of damages in similar cases is considered in a note to Gardner v. Deeds, 4 L. R. A. (N. S.) at page 740, where many decisions are collected. A later reference is Ridgeway, etc., Co. v. Penna. Cement Co., 221 Pa. 160, 70 Atl. 557, 18 L. R. A. (N. S.) 613.

The judgment is affirmed.

(217 Fed. 760)

SCHIEBEL TOY & NOVELTY CO. v. CLARK (three cases).

(Circuit Court of Appeals, Sixth Circuit. October 16, 1914.)

Nos. 2443–2445.

1. PATENTS (§§ 129, 202*)—SUIT FOR INFRINGEMENT—TITLE TO SUPPORT—DEFENSES.

Where receivers appointed in a suit for dissolution of a partnership sold the assets of the firm, including patents, and by direction of the court assigned the same to the purchaser, which assignment was recorded, the partner who instituted the suit, and at whose instance the

*For other cases see same topic & § NUMBER in Dec. & Am. Digs. 1907 to date, & Rep'r Indexes

sale was made, when sued for infringement of one of the patents, cannot deny the title of the purchaser; nor can he deny the validity of the patent, although he may deny infringement, and in aid of such defense invoke the prior art.

[Ed. Note.—For other cases, see Patents, Cent. Dig. §§ 182½-186, 281-289; Dec. Dig. §§ 129, 202.*]

2. PATENTS (§ 328*)—VALIDITY AND INFRINGEMENT—LOCOMOTIVE TOY.

The Clark patent, No. 676,420, for a friction-driven locomotive toy, which is an improvement on the device of a prior patent, discloses invention, and while, in view of the prior art, and especially of such patent, it is entitled to only a limited range of equivalents, it is not restricted to the specific form preferred in the specification; also *held* infringed.

3. PATENTS (§ 165*)—INFRINGEMENT—CONSTRUCTION OF CLAIMS.

The rule which ordinarily confines a patentee to the language he has used in stating his claims is not so hard and fast as to permit appropriation by another of the essence of his invention, merely because he has employed fit words to apply his invention to an earlier one, upon which it is an improvement.

[Ed. Note.—For other cases, see Patents, Cent. Dig. § 241; Dec. Dig. § 165.*]

4. PATENTS (§ 328*)—VALIDITY—LOCOMOTIVE TOYS—PRIOR USE.

The Turner patents, No. 930,107, for a racer automobile toy, and No. 930,633, for an engine locomotive toy, *held* void for prior public use and sale of the devices more than two years before the applications were filed. with the consent of the patentee.

5. COURTS (§ 300*)—FEDERAL COURTS—INCIDENTAL JURISDICTION—INFRINGEMENT SUITS.

Where, in a suit for infringement, the patents in suit are adjudged void, and the parties are both citizens of the same state, the court is without jurisdiction to determine a cause of action alleged for unfair competition.

[Ed. Note.—For other cases, see Courts, Cent. Dig. §§ 847, 850; Dec. Dig. § 300.*

Jurisdiction of federal courts in suits relating to patents, see note to Bailey v. Mosher, 11 C. C. A. 313.]

6. PATENTS (§ 26*)—"INVENTION"—COMBINATION.

"Invention" may consist of old elements so combined as to co-operate and produce a new and useful result.

[Ed. Note.—For other cases, see Patents, Cent. Dig. §§ 27-30; Dec. Dig. § 26.*

For other definitions, see Words and Phrases, First and Second Series, Invention.]

Appeals from the Circuit Court of the United States for the Western Division of the Southern District of Ohio; Howard C. Hollister, Judge.

Three suits in equity by the Schiebel Toy & Novelty Company against David P. Clark. Decrees for defendant, and complainant appeals. Reversed as to one case, and affirmed as to two cases.

Wm. R. Wood, of Cincinnati, Ohio, for appellant.

H. A. Toulmin and H. A. Toulmin, Jr., both of Dayton, Ohio, for appellee.

Before WARRINGTON, KNAPPEN, and DENISON, Circuit Judges.

*For other cases see same topic & § NUMBER in Dec. & Am. Digs. 1907 to date, & Rep'r Indexes

WARRINGTON, Circuit Judge. These three suits were for alleged infringements of particular letters patent, and, in addition to the usual features of such cases, issues growing out of the dissolution of a copartnership and sale of its assets, also concerning alleged unfair competition, were involved. As far as necessary, these issues will be noticed as we progress. The patents in suit relate to improvements in toys of the type known as locomotive toys.

The first suit involved letters patent No. 676,420, dated June 18, 1901, and issued to the appellee, Clark. The patent covers a friction-driven device designed for the operation of toys in the forms of locomotives, automobiles, and the like.

The infringement complained of in the second suit concerns letters patent No. 930,107, issued August 3, 1909, in the name of John C. Turner, assignor, to the plaintiff. The invention was designed to provide a toy "preferably representing a racer automobile, in which the body is struck up from a single blank."

The third suit charged infringement of letters patent No. 930,633, issued August 10, 1909, in the name of John C. Turner, assignor, to the plaintiff; and the patent was intended for "an engine locomotive toy wherein the boiler, cab side walls, fire box side walls, and boiler support are struck up from a single sheet of metal and bent into shape."

The devices in issue in these last two suits were designed as bodies, automobile and locomotive, for the friction-driven device involved in the first suit. The suits were all between the same parties, were tried together, and passed upon in one opinion below. The decree in the first suit was based upon noninfringement, and in each of the other suits upon invalidity of the patent in issue. The appeals were argued and submitted as one cause here, and will be disposed of in this opinion.

[1] 1. *The Clark Patent in Suit.* It is contended that plaintiff has no title to the Clark patent and cannot maintain suit upon it for that reason; also that Clark may contest its validity. D. P. Clark & Co. in name, with some changes in membership, was engaged as a copartnership in the toy business at Dayton, Ohio, from 1897 to 1909. In February, 1904, D. P. Clark and William E. Schiebel became equally and solely interested in the firm, and continued the business under the old name until dissolution, which will be explained later. Clark and Schiebel each secured letters patent upon certain devices designed by them respectively; and they entered into an oral agreement, and carried it out at least in part, to transfer their patents to the firm. On May 18, 1904, Clark transferred to the firm a number of his patents—including the patent now under consideration, No. 676,420—and this transfer was two days later recorded in the Patent Office.

Differences arose between the partners, and in December, 1908, Clark commenced a suit against Schiebel in the common pleas court of Montgomery county, Ohio, for the dissolution of the partnership and sale of its assets. He alleged that the company was engaged in a large and profitable business in the manufacture and sale of novelties and toys;

that it possessed "a number of copyrights and patents issued to it by the United States," a valuable good will, and assets of about $75,000 above its liabilities; that the assets were of "far greater value when taken together than if separated," and should be sold as an entirety, and the proceeds divided between the partners. The prayer was that the partnership "be adjudged dissolved, and a receiver of the property and good will be appointed, with power to dispose of the same." Clark made and signed the required verification to the petition. Two receivers were appointed; and, under orders of the court, the firm assets, which included the patents, good will, and the right to use the firm name, were sold to plaintiff in the instant suits as the successful bidder. The sale was confirmed, and the receivers were ordered among other things to assign the patents to the purchaser, and "to do and perform all other acts and things necessary and proper to convey and transfer to and vest in said purchaser all the property, assets, and interests so sold." On March 26, 1909, the receivers executed and delivered a written transfer to the plaintiff, embracing the letters patent now in question, No. 676,420; and this transfer was recorded in the Patent Office April 1, 1909.

It is claimed that the legal title to the patent then stood in the name of D. P. Clark & Co.; but we need not pass upon this claim, for, conceding it, and also that under section 4898, U. S. Rev. Stat. (Comp. St. 1913, § 9444), the formal course in the state court would have been to have the firm join in the execution of the transfer (Ball v. Coker [C. C.] 168 Fed. 304, and citations), still the insistence would be unavailing. In disposing of the suit to dissolve the firm and wind up its business, the state court was in the exercise of its chancery powers and jurisdiction, and the members of the firm could have been compelled to execute a formal assignment, either themselves, or, in default, by some suitable person appointed by the court. Ager v. Murray, 105 U. S. 126, 127, 132, 26 L. Ed. 942. Moreover, the sale was voluntary, not involuntary. Schiebel is president of the plaintiff company, and is not questioning the receivers' transfer of the patent. As we have seen, these receivers were the official instrumentality sought by Clark for disposing of the firm assets; and Clark received and now enjoys the benefits of his full share of the sale proceeds. It results that at least the equitable title to the patent passed to plaintiff; and Clark's reliance upon an outstanding naked legal title is in effect a claim that he may have the benefits of both the patent and the money he received for it. This cannot be assented to, and, for the purposes of this suit, he will not be heard to deny plaintiff's title.

It follows that Clark is estopped from denying the *validity* of the patent, either for lack of novelty or utility, or by reason of anticipation through prior inventions; but this does not prevent him from denying infringement. Noonan v. Chester Park Athletic Club Co., 99 Fed. 90, 91, 39 C. C. A. 426 (C. C. A., 6th Cir.); Babcock & Wilcox Co. v. Toledo Boiler Works, 170 Fed. 81, 84, 95 C. C. A. 363 (C. C. A., 6th Cir.); Fishel-Nessler Co. v. Fishel & Co., 204 Fed. 790, 791 [1] (C. C. A., 2d Cir.). In aid of the denial of infringement, Clark may invoke the prior art (Noonan v. Chester Park Athletic Club Co.,

[1] 123 C. C. A. 142.

supra; Leather Grille & Drapery Co. v. Christopherson, 182 Fed. 817, 822, 105 C. C. A. 249 [C. C. A. 9th Cir.]); for the effect of this is simply to define the thing sold, and so to ascertain definitely whether it has been infringed or not. As the late Mr. Justice Lurton said in the Noonan Case, 99 Fed. 91, 39 C. C. A. 426, respecting the admissibility of the state of the art involved, it enables the court to see—

"* * * what the thing was which was assigned, and thus determine the primary or secondary character of the patent assigned, and the extent to which the doctrine of equivalents may be invoked against an infringer. The court will not assume against an assignor, and in favor of his assignee, anything more than that the invention presented a sufficient degree of utility and novelty to justify the issuance of the patent assigned, and will apply to the patent the same rule of construction, with this limitation, which would be applicable between the patentee and a stranger."

And this court again had occasion to declare the rule in United States Frumentum Co. v. Lauhoff, 216 Fed. 610, 132 C. C. A. 614, decided June 30, 1914; Judge Denison saying:

"While a patentee assignor may, when made a defendant, litigate the scope of his patent and have it judicially construed according to its true extent (Noonan v. Chester Co. [C. C. A., 6th Cir.] 99 Fed. 91, 39 C. C. A. 426; Smith v. Ridgeley, 103 Fed. 875, 43 C. C. A. 367 [C. C. A., 6th Cir.]), the courts * * * will not, in a doubtful case, construe it so narrowly as to make it worthless. * * * They will be inclined, so far as the record permits, to make its exclusive right a real and valuable thing. Alvin Co. v. Scharling (C. C.) 100 Fed. 87."

[2] What, then, is the Clark patent in suit, and is it infringed? It is a combination patent, and purports to be "in the general nature of an improvement upon the structure set forth in letters patent No. 593,-174, granted November 2, 1897, to Clark & Boyer, as assignees of Israel D. Boyer and Edith E. L. Boyer," and called in this litigation the Boyer patent; and this reference will be found helpful in distinguishing between old and new elements of the patent in suit. The Clark structure, as described in the specification and drawings, consists of a truck frame, composed of side members having preferably an arched form and joined at their ends by transverse members, mounted between two sets of running wheels with parallel axles; and as thus far described is similar in appearance to a miniature open road wagon, except that all the running-wheels are of the same diameter and the fore and aft sets are brought into close proximity at their rims. The axles pass through slots extending from the bottom, at points near the ends, of each side member of the truck frame; and when this frame is lifted, the axles of the running-wheels are held within the slots by a wire frame which passes under each axle and extends over the end bars of the truck frame. The slots are of such depth as to prevent contact between their upper ends and the axles, and the outer side walls of the slots incline toward each other. Mounted in the angles formed by the rims of the two sets of running-wheels is a floating axle carrying an inertia-wheel midway of its length. The ends of this axle impinge on the running-wheels at a very acute angle; "its line of movement" in the language of the specification "being parallel to a tangent to said wheels." At the center, and on the inner surface of each side member of the truck frame, an anti-friction roller

is so maintained as to present a rolling contact with the upper surface of the floating axle. It is to be observed (though it is not distinctly provided for in the specification) that the floating axle necessarily and in practice passes through ample openings made in the side members of the truck frame immediately under such anti-friction rollers. Thus the weight of the truck frame is removed from the axles of the running-wheels, is carried by the floating axle, and the frictional resistance to the rotating movement of the axles of the running-wheels is materially reduced; and, besides, the combined weights of the truck frame, the inertia-wheel, and its axle, press upon the peripheries of the running-wheels. Stated otherwise, and in language of the specification, the floating axle is supported at each end on "a three-point bearing composed of the running-wheels and the anti-friction rollers on the truck frame," and so has only "rolling contacts." Further, the specification states:

"Owing to the inclination of the outer walls of the slots in which the running-wheel axles are mounted downward pressure applied to the truck frame will cause the running-wheel axles to be moved toward each other and press more firmly against the inertia-wheel axle," which results in "a biting action" and "still further enhances the effectiveness of the contact between the parts."

After stating that the truck frame may serve as a support for any suitable vehicle body, the specification proceeds:

"The toy is operated by placing it upon a suitable surface and moving it over the same while pressure is applied to the truck frame. In this manner motion is imparted from the running-wheels to the inertia-wheel, and when the pressure is removed and the toy released the inertia-wheel will in turn impart movement to the running-wheels and cause the toy to move over the surface on which it is placed."

And the results attained are stated to be a "much longer operative period and a higher initial speed when the toy is released for automatic operation." While not limiting himself to the "precise details of construction" so described, but stating that "it is obvious that they may be modified without departing from the principle" of his invention, the patentee makes three claims, which appear in the margin.[1]

It is important now to give some consideration to the state of the

[1] "1. In a locomotive toy, the combination, with two pairs of running-wheels having parallel axles, of a truck frame vertically movable relatively thereto, and provided with bearing-rollers, and an inertia-wheel having a floating axle, said axle having a three-point bearing at each end between the running-wheels and the truck-frame rollers, the weight of the truck frame being supported on said inertia-wheel axle, substantially as described.

"2. In a locomotive toy, the combination, with two pairs of running-wheels having parallel axles, of a truck frame having slots, the bearing-walls of which are inclined to force the truck-wheels laterally toward the inertia-wheel axle when the truck frame is depressed, and an inertia-wheel having an axle bearing upon the peripheries of the running-wheels, substantially as described.

"3. In a locomotive toy, the combination, with two pairs of running-wheels having parallel axles, of a truck frame vertically movable relatively thereto and having bearing-rollers and slots, the bearing-walls of which are inclined to force the truck-wheels toward each other, and an inertia-wheel provided with a floating axle bearing at its ends between the peripheries of the running-wheels and the truck-frame rollers, the weight of the truck frame being supported on said axle by said rollers, substantially as described."

art at the time of the issue of this patent. We have seen that the patent purports to be an improvement upon the structure set forth in the Boyer patent. While Israel D. Boyer and Edith E. L. Boyer appear to have been the inventors, neither of them was a member of the firm of Clark & Boyer at the time the patent was assigned and issued to the firm. The firm was dissolved by the death of Boyer in 1899, and Clark assigned the Boyer patent to D. P. Clark & Co. on May 18, 1904. It is hardly necessary to say, however, that Clark's interest in the Boyer patent at the date of the issue to him of the patent in suit (June 18, 1901) did not entitle him to include in his patent the invention embraced in the prior Boyer patent. Indeed, this would not have been admissible if he had been the inventor of both patents, and so the Clark patent in suit may be read in the light of the Boyer patent precisely as if the latter had been issued to a stranger. James v. Campbell, 104 U. S. 356, 382, 26 L. Ed. 786; Celluloid Manufg. Co. v. Cellonite Manufg. Co. (C. C.) 42 Fed. 900, 905, 906. The structure covered by the Boyer patent is thus described in its specification:

"It consists of a four-wheeled truck and a heavy inertia-wheel, the latter being fixed to a shaft which has its sole bearings on the peripheries of the four running-wheels of the truck, so that any motion imparted to the inertia-wheel will be transmitted through its shaft to the four running-wheels of the truck, causing the truck to move over the floor, or vice versa, any motion given to the truck will be transmitted through its four running-wheels to the shaft of the inertia-wheel."

It is true that, in the preferred form of truck there described, the wheels of one of the axles were placed closer together than those of the other, so that the two pairs of wheels would slightly overlap when mounted in the frame; but, as the specification states, this is not necessary, "for if the shaft of the inertia-wheel be large enough in diameter the adjacent wheels may lie in the same plane." It is also true that in the preferred form motion is imparted to the shaft of the inertia-wheel by a removable top in one or the other of two defined forms, which is set in motion by a string and used as a motor; but the suggestion of a substitute for either of these devices is seen in a method pointed out for recharging the motor, namely, "by pushing or pulling the truck over the floor—the motion of the running-wheels imparting velocity to the motor." And claims 5 and 6 are shown in the margin.[2] It thus becomes evident that the purpose of the Clark

[2] "5. In a locomotive toy, four running-wheels arranged in two pairs near together and in such manner that the adjacent wheels form an angle in which a shaft may lie; an inertia-wheel fixed to a shaft, said shaft lying in the angle formed by the adjacent pairs of running-wheels; the whole in combination and arranged to operate substantially in the manner and for the purpose specified.

"6. A locomotive toy consisting of a vehicle having four running-wheels arranged in two pairs near together and in such manner that the adjacent wheels form an angle in which a shaft may lie; an inertia-wheel fixed to a shaft and independent of the vehicle; on the shaft of the inertia-wheel a handle loosely mounted to enable the wheel to be held in the hand while velocity is imparted thereto and also to enable the live wheel to be placed upon the vehicle with its shaft resting in the angle formed by the four running-wheels, the inertia-wheel then acting as a motor and causing the vehicle to move ahead substantially as specified."

improvement was to reduce the frictional resistance encountered in the operative parts of the Boyer patent. Clark did this by the introduction of slots designed for the axles of the running-wheels and the employment of anti-friction rollers as bearings for the axle of the inertia-wheel. These contrivances operated at once to transpose the weight of the truck from the axles of the running-wheels to the axle of the inertia-wheel and to place the latter axle entirely within rolling contacts. The advance so made in the state of the art as it was disclosed by the Boyer patent is seen, and cannot fail of appreciation, when it is considered that Clark admittedly succeeded in selecting and combining means which were calculated in marked degree to diminish existing mechanical interference with the operation of friction-driven devices.

The scope of the Clark improvement is nevertheless affected by the facts that slots designed to control or give free action to axles of running-wheels, and that anti-friction rollers, were not new at the time he applied for his patent. Slots are shown in the drawings and described in the specification of Trueman's English patent of July 13, 1889:

"*e*, *e*, are the second or traveling wheels, and *f* is the axle of the same, which we mount in slotted or loose bearings *g* in the frame or sides *d* of the carriage, so that the axle *f* can move nearer to or farther from the axle *b* of the fly wheel."

And, as pointed out by defendant's expert when describing the prior art, a number of exhibits consisting of foreign-made toys show axles of traction wheels rotating in vertically slotted bearings, though they do not seem to have been designed, as here, to avoid friction. It is true that these foreign-made toys are much less in size and weight than those made under the patent in suit; but, as these foreign and domestic devices all belong to the toy art, it is too clear for argument that the designer of the larger toys could not shut his eyes to the facts disclosed by the older and smaller objects of the same art. And, as to Clark's anti-friction rollers, they find mechanical analogy in earlier devices. This is not disputed as far as anti-friction bearings are concerned. However, it is disputed that such bearings have been applied to "an inertia-wheel axle mounted on anti-friction bearings"; and in support of this complainant's expert criticises three patents referred to by defendant's expert, viz.: Farley, No. 216,165 (issued June 3, 1879); Anderson, No. 228,720 (issued June 15, 1880); and Burton, No. 487,236 (issued November 29, 1892). The criticism is:

"The axle *f* of Farley, the axle *A* of Anderson, and the axle *15* of Burton is in each instance the axle of an ordinary flanged car wheel. To follow the teachings of these patents would simply lead to the application of anti-friction rollers at the *axle* of the *traction wheels* of a toy. This is not done by either party to the suit."

It is observable that this concedes the prior invention and use of such rollers with respect to axles of ordinary car wheels; and we may safely add that the use of anti-friction bearings in one form or other,

including rolling contacts, was a matter of common knowledge prior to the date of the patent in suit.

Much is said in argument concerning the novelty of the three-point bearing at each end of the floating axle, between the running-wheels and the truck-frame rollers. As we have seen, this is distinctly embraced in the combination set out in claim 1 of the patent in suit; and it is stated in the specification:

> "It will also be noted that it results from the construction described that the inertia-wheel is provided with a floating axle having no fixed bearing, but being supported at each end on a three-point bearing composed of the running-wheels and the anti-friction rollers on the truck frame, all of the contacts being rolling contacts."

As already shown, the material feature of this three-point bearing was the application of roller bearings to the upper surface of the floating axle; but this axle had been previously carried in the angles formed by the rims of the four running-wheels of the Boyer patent. Still, under Clark's invention, the inertia-wheel axle was no longer an ordinary floating axle, but was effectually confined within rolling bearings. Further, the declared object of the patentee was to improve the efficiency of toys of this character, by imparting a greater velocity to the inertia-wheel while the toy was being prepared for operation, and "a much longer operative period and a higher initial speed" when the toy was "released for automatic operation." However, when the number of prior patents with their drawings and models appearing as exhibits in the present record are considered, it is plain that the art to which the present patent belongs had been so developed and exploited through competition in toy contrivances as materially to reduce the field for invention (as distinguished from mechanical skill) respecting operative means and appliances. We therefore conclude that the patent is entitled only to a limited range of equivalents; but this does not mean that such equivalency shall not be commensurate with the extent of the invention. McSherry Mfg. Co. v. Dowagiac Mfg. Co., 101 Fed. 716, 721, 722, 41 C. C. A. 627 (C. C. A., 6th Cir.); King Ax Co. v. Hubbard, 97 Fed. 795, 803, 38 C. C. A. 423 (C. C. A., 6th Cir.); Bundy Mfg. Co. v. Detroit Time Register Co., 94 Fed. 524, 538, 540, 36 C. C. A. 375 (C. C. A., 6th Cir.); Paper Bag Patent Case, 210 U. S. 405, 415, 28 Sup. Ct. 748, 52 L. Ed. 1122.

2. *The Alleged Infringing Patented Device.* This is covered by letters patent granted to defendant Clark April 27, 1909. The preferred form of the alleged infringing structure may for present purposes be described thus: A toy formed of sheet metal and in imitation of an automobile touring car; the front wheels, called steering-wheels, are mounted on a pivoted axle which may be so adjusted as to cause the toy to travel either in a stright line or in a circle; the rear wheels, called driving-wheels, are mounted on an axle, which in turn is movably mounted (in slots) on the body portion of the vehicle, so that the rear portion of the body may have a downward, and the axle, a forward, movement. While the steering and driving wheels are the same

in diameter, and when traveling in a straight line run in the same plane, the two sets are placed and operated at considerable distance apart. A shaft carrying an inertia-wheel, and extending through openings in the side walls of the body of the toy, is maintained in front of the driving-wheels (at an elevation slightly greater than that of the center line of their axle) and mounted on and held in place by rolling contacts. The contacts with the shaft are at points as follows: On its lower rearward quarter with the rims of the driving wheels; on its corresponding forward quarter, with the peripheries of two anti-friction rollers suitably adjusted upon and pivoted to the inner surfaces of the side walls of the body; and on the center of its upper half with the peripheries of two anti-friction rollers similarly adjusted and pivoted. The ends of the shaft extending beyond the side walls of the toy are enlarged and so grooved as to form friction pinions, which co-operate with beveled contact surfaces formed on the rims of the driving-wheels; and the weight of the rear portion of the toy is thus supported upon such beveled surfaces of the driving-wheels and not upon the axle. Further, as the specification states, the "driving member" engages the "driven member" with a "wedging action," which is designed to increase the frictional contact and to give an improved result in the transmission mechanism. Two claims are made in the letters patent, the first of which is given in the margin;[3] and this claim is the same as the second, except that the latter calls for an axle "movably" mounted and omits the following words found in the first claim: "Said axle and said shaft being relatively movable."

We may now compare the essential features of the alleged infringed and infringing devices; and it should be remembered that we are dealing with the operative parts of these devices. In both structures the shaft of the inertia-wheel is sustained in angles formed by four rolling bearings; in the first structure all these bearings are both ground and driving wheels, while in the second structure only the rear bearings are ground and driving wheels, the other two being anti-friction rollers; but in both structures, the shaft is held in its sustaining angles by two anti-friction rollers contacting with its upper surface. In both structures the combined weight of the shaft, inertia-wheel, and a substantial portion of the body of the toy, is employed through adjustment of the parts to keep the shaft in firm contact with all these wheels and rollers, and so to cause a "biting action" in the first and a "wedging action" in the second structure and for the avowed purpose of increasing the efficiency of the contact between the shaft and its bearings.

[3] "1. In a toy of the character described, the combination with a body portion, an axle mounted on said body portion, and ground wheels carried by said axle and having a plurality of frictional contact surfaces, of a shaft mounted on said body portion and having near each end thereof a plurality of frictional contact surfaces adapted to co-operate with the frictional contact surfaces of the respective ground wheels, the contact surfaces of both said shaft and said wheels being inclined to the plane of their rotation to afford a wedging effect, said axle and said shaft being relatively movable, and an inertia-wheel carried by said shaft whose weight coacts with the said frictional surfaces to hold them together with a wedging action."

Moreover, the "three-point bearing" found near each end of the shaft of the first structure was reproduced in the second, but with these differences in arrangement of parts: (1) The forward wheels of the first, considered as running-wheels, were replaced by the steering wheels of the second structure; (2) the use of these forward wheels as driving-wheels was transposed to the single set of driving-wheels of the second structure; and (3) their use as roller bearings for the shaft of the first was replaced by the two lower anti-friction rollers of the second structure.

The question then is whether this amounts to infringement. It must be conceded that there is a marked difference in appearance between the two structures. On the other hand, there is substantial identity between them in essence of elements and combination and in principle of operation; and they are the same in results attained. In saying this we are conscious of the rule that invention may consist of old elements so combined as to co-operate and produce a new and useful result (Loom Co. v. Higgins, 105 U. S. 580, 591, 26 L. Ed. 1177; Ferro Concrete Const. Co. v. Concrete Steel Co., 206 Fed. 666, 669, 124 C. C. A. 466 [C. C. A., 6th Cir.]); but the Clark patents do not present two distinct and independent combinations. They have too many parts, discharging too many functions, that are common to both. Differences in words that are employed in either specification or claims of such patents respectively cannot, in spite of what is disclosed by the devices themselves, conceal the materiality in identity between the patents. Machine Co. v. Murphy, 97 U. S. 120, 125, 24 L. Ed. 935; Cantrell v. Wallick, 117 U. S. 689, 695, 6 Sup. Ct. 970, 29 L. Ed. 1017. It is true that, so far as their location is concerned, the front wheels of the first structure were omitted in the second; but we have seen that the functions they were designed to perform in the first were substantially replaced in the second structure. These wheels of themselves do not constitute a distinct and complete element of the patent in suit. For present purposes, however, they may be so regarded, and they or their substantial equivalent be treated as necessary to the effective operation of the machine. Still the changes wrought do not amount to an omission of both an essential element and a substantial mechanical equivalent. Union Paper Bag Machine Co. v. Advance Co., 194 Fed. 126, 138, 114 C. C. A. 204, and citations (C. C. A., 6th Cir.).

Clark could not omit these forward wheels and utilize their functions as he did, and at the same time escape the charge of infringement, unless he observed the settled rule that if one omits entirely an ingredient of a patented combination he must do so without substituting any other, or he must substitute one that is new or that performs a substantially different function, or, if old, that was not known at the date of the patent in suit as a proper substitute for the omitted ingredient. Gill v. Wells, 89 U. S. (22 Wall.) 1, 28, 22 L. Ed. 699; Imhaeuser v. Buerk, 101 U. S. 647, 656, 25 L. Ed. 945. Surely continuing to mount the shaft within rolling contacts in the same position and for the same purpose as before, and simply substituting the lower two roller bearings for the wheels in question, was not, so far as maintaining the shaft within such bearings is concerned, to introduce anything new, or anything unknown

as a proper substitute, or any substantial difference in function; for, as we have seen, Clark himself had previously devised the use of like rollers for a kindred and obviously analogous purpose in the patent in suit and for years had applied them to such use. It is equally clear that, when Clark transposed the driving function of these wheels to his two driving-wheels, he simply changed the form, not the substance, of the old rolling contacts (Devlin v. Paynter, 64 Fed. 398, 400, 12 C. C. A. 188 [C. C. A., 3d Cir.]; Bundy Mfg. Co. v. Detroit Time Register Co., 94 Fed. 524, 538, 36 C. C. A. 375 [C. C. A., 6th Cir.]); and even if he so enhanced the frictional efficiency of such contacts, he did not materially change the mode of operation or produce a new result, and so could not in this way escape infringement (Marsh v. Seymour, 97 U. S. 348, 359, 24 L. Ed. 963; Hoyt v. Horne, 145 U. S. 302, 309, 12 Sup. Ct. 922, 36 L. Ed. 713; Macomber on Fixed Law of Patents [2d Ed.] p. 411, § 455).

Further, the changes here made are analogous in principle to those involved in Morgan Engineering Co. v. Alliance Mach. Co., 176 Fed. 100, 109, 100 C. C. A. 30 (C. C. A., 6th Cir.); and when we look at the substance of things, as distinguished from their form, there would seem to be in the infringing device here as clearly an embodiment of the patent in suit as there was in the infringing structure of the patent involved there; for, as Mr. Justice Clifford said in Machine Co. v. Murphy, supra, 97 U. S. at page 125, 24 L. Ed. 935:

"The substantial equivalent of a thing, in the sense of the patent law, is the same as the thing itself." Winans v. Denmead, 15 How. 330, 342, 14 L. Ed. 717: Devlin v. Paynter, supra, 64 Fed. 400, 12 C. C. A. 198; Hoyt v. Horne, supra, 145 U. S. 309, 12 Sup. Ct. 922, 36 L. Ed. 713; Cantrell v. Wallick, supra, 117 U. S. 693, 6 Sup. Ct. 970, 29 L. Ed. 1017.

We are consequently satisfied that there is no sufficient reason to restrict the invention in suit to the particular form preferred and described in the specification (National Tube Co. v. Marks, 216 Fed. 507, 133 C. C. A. 13, decided by this court July 25, 1914; Hoyt v. Horne, supra, 145 U. S. 309, 12 Sup. Ct. 922, 36 L. Ed. 713); and, although the range of equivalency is limited, as stated, we hold that the claims are each infringed.

[3] In reaching this conclusion we are not unmindful of the language of the claims of the patent; as, for example, each claim calls for "two pairs of running-wheels having parallel axles." We have seen that such wheels (obviously with parallel axles) were embraced in the Boyer patent, and that the invention of Clark was distinctly additional to that of Boyer. The merit of Clark's invention was the release it gave to the Boyer device, as also to friction-driven devices generally, from undue frictional resistance to free operation. Even the rigor of the rule which ordinarily confines a patentee to the language he has used in stating his claims is not of such a hard and fast fiber as to suffer appropriation of the essence of such an invention as this, simply because the patentee employed fit words to apply his improvement to an earlier invention; certainly there is no such degree of absolutism in the rules of construction as to require such a course to be pursued in the instant case, for that would be (as we have said of his contesting title) to permit Clark

both to sell and keep his invention. Macomber, Fixed Law of Patents (2d Ed.) p. 16; Bundy Mfg. Co. v. Detroit Time Register Co., supra, 94 Fed. 539, 540, 36 C. C. A. 375.

Other Alleged Infringing Devices. It is to be observed that plaintiff did not in its original bill or any of its amended forms specifically describe any alleged infringing device, and that the answer in its original and amended forms denies the averments of infringement. In addition to his infringing patented device, Clark manufactured and sold two other types of machines, called defendant's "power arrangement" of 1910 and 1911, respectively, and but little need be said of these devices. The first involved a change from single to double roller bearings at the ends of the inertia-wheel shaft. These rollers are mounted on the ends of pivots which pass through the side walls of the toy, each pivot carrying a roller on the exterior and interior surfaces of the walls, and the upper sets of rollers are removed to points forward and nearly in vertical line with the location of the forward lower rollers. The 1911 power arrangement changes the location of the inertia-wheel shaft to points on the rims of the driving wheels directly above the ends of their axle, and the location of the roller bearings to points immediately above and near the ends of the shaft, where they contact with its forward and rearward quarters; one roller being pivoted to the interior and the other to the exterior surface of each wall of the toy. It is to be noted of these changes in power arrangement that in both instances the three-point bearing is preserved at the ends of the shaft; further, they are but relocations of the points of contact between the inertia-wheel shaft and its rolling bearings. The relations between and the interdependence of the parts remain substantially the same as they existed in the patented infringing structure. The efforts made to justify these structures under Pilbrow's patent (1843), which was designed for steam engines, or Smith's patent (1890), which was devised as a gearing for motor cars, are sufficiently answered (1) by the fact that if those devices were operative, which is doubtful, they are so materially unlike the devices in issue here as to be inapplicable, and (2) by the continuing practical appropriation, through Clark's infringing devices, of the gist of the patent in suit. It cannot well be claimed that either the 1910 or the 1911 structure was not, both as to functions and manner of operation, the substantial equivalent of its immediate predecessor; and it need not be said that, if we are right in our conclusion as to the infringing character of the device made in accordance with Clark's infringing patent (the immediate predecessor of the 1910 structure), it follows that the changes of 1910 and 1911 are not sufficient to avoid infringment.

[4] 3. *The Turner Patents.* These patents were applied for March 5, 1909, and, as stated, were issued in the name of John C. Turner, assignor, to the plaintiff; the first, No. 930,107, on August 3, 1909, and the other, No. 930,633 August 10th of that year. Concededly the subjects of these patents were each in form and design conceived and as many as 50 hand-made samples of them made, in the shop of D. P. Clark & Co. more than two years before the date of application. Con-

cededly Turner was then in the employ of the partnership as foreman of its construction department, and there is sharp conflict in the testimony as to whether Clark himself did not conceive and suggest the idea and plan of each device; Turner doing nothing more of importance than to carry out Clark's directions. However, it is not necessary to attempt to reconcile this conflict, because we are satisfied that some of the sample toys were exhibited with the view of effecting sales, and to all intents and purposes toys of these types were sold more than two years prior to the application. This occurred as early as February, 1907, and the judicial sale of the assets was confirmed February 5, 1909. Meanwhile these classes of toys had been regularly manufactured and sold by the partnership without objection on the part of Turner and without apparent purpose of any one connected with the business to apply for patents. It was not until March 5th following the judicial sale, as we have seen, that Turner declared himself as the inventor of the articles. Of course, sales of the toys made within the two-years period do not of themselves show that similar sales were made before; but Turner's long acquiescence tends to show that the purpose was, when the toys were originally devised (no matter by whom), to treat the designs as ordinary copartnership developments of the toy art, and so to forego any claim of invention. Atlantic Works v. Brady, 107 U. S. 192, 199, 200, 2 Sup. Ct. 225, 27 L. Ed. 438; Egbert v. Lippman, 104 U. S. 333, 337, 26 L. Ed. 755. This also adds to the probability of truth in the evidence adduced that sales, as well as the incidental public use attending such transactions, actually took place and with Turner's consent prior to the two-years period.

The court below found that the defense of prior use and sale had been established, and so decreed that the patents were invalid. We concur in this conclusion. In doing so we have in mind the insistence of counsel that the portions of these toys which are claimed to have been covered by the Turner patents—that is, the bodies of the toys—had not been perfected when the sales were made. This is based upon the theory that these portions were hand-made and not machine-made. We are convinced, however, that there was no material difference between these portions of the toys whether produced by hand or machine; and it is to be remembered, as before pointed out, that the operative parts of the toys—the friction-driven device covered by the Clark patent in suit—had admittedly been perfected long before. The sales were made through accepted orders upon the exhibition and faith of the samples so produced, and were carried out in accordance with the established course of business of the partnership; and we think this was sufficient under the familiar and settled doctrine of sales. Plimpton v. Winslow (C. C.) 14 Fed. 919, 921, per Lowell, C. J.; Egbert v. Lippman, supra, 104 U. S. 336, 26 L. Ed. 755; Worley v. Tobacco Co., 104 U. S. 340, 343, 344, 26 L. Ed. 821; Dalby v. Lynes (C. C.) 64 Fed. 376 378, per Putnam, C. J. The fact that the purchasers were, according to their custom of dealing with D. P. Clark & Co., given the right slightly to reduce the number of articles ordered, cannot alter the effect of the sales made; and since this privilege did not extend to anything like the whole number of articles ordered, the present case is broadly

distinguishable from William B. Mershon & Co. v. Bay City Box & Lumber Co. (C. C.) 189 Fed. 741, 748, where Judge Denison held that a sale "on trial" of a single machine did not constitute a sale within the meaning of section 4886 (Comp. St. 1913, § 9430).

[5, 6] 4. *Unfair Competition.* The averments made in this respect are at best meager, and are confined to the two suits upon the Turner patents. The plaintiff corporation was created under the laws of Ohio, and is located and doing business in the city of Dayton in that state; and the defendant is a citizen and resident of the same state and city. The amended bill upon the first Turner patent in form contains only one cause of action, comprised in several counts. After the usual averments of infringement, it is stated that "in thus copying your orator's patents and designs" the defendant "has been guilty of unfair competition with your orator." In the last amended bill in the suit upon the second Turner patent, plaintiff in terms introduces a second cause of action, and avers that defendant is using "designs, dies, and patterns" of plaintiff in the manufacture of locomotive toys, "which are a close imitation" of plaintiff's toys, "and is selling the same in competition" with plaintiff; that this has resulted in depriving plaintiff of "a large share of the good will," etc., which, "but for the unlawful competition, it would have held and enjoyed."

In view of the invalidity of the Turner patents and the lack of diversity of citizenship, we do not think this court has jurisdiction to pass upon the question of unfair competition. We are aware of decisions to the contrary. It is in effect said and with much force in some of the cases that a court once acquiring jurisdiction under an act of Congress, say in a patent or trade-mark suit, may determine an issue of unfair competition, and this upon the principle that the court, having acquired jurisdiction for one purpose, may, in spite of the failure of that purpose, retain the case and determine other questions without respect to the citizenship of the parties; but we think this is opposed to the rule laid down respecting this class of cases in Leschen Rope Co. v. Broderick, 201 U. S. 167, 172, 26 Sup. Ct. 425, 50 L. Ed. 710, affirming decision below 134 Fed. 571, 572, 67 C. C. A. 418 (C. C. A., 8th Cir.), approved and reaffirmed in Standard Paint Co. v. Trinidad Asph. Co., 220 U. S. 446, 460, 31 Sup. Ct. 456, 55 L. Ed. 536. See, also, Cushman v. Atlantis Fountain Pen Co. (C. C.) 164 Fed. 94, by Judge Lowell; Bernstein v. Danwitz (C. C.) 190 Fed. 604, 605 and citations; King & Co. v. Inlander (C. C.) 133 Fed. 416; Meckey v. Grabowski (C. C.) 177 Fed. 591, 592; Johnston v. Brass Goods Co. (D. C.) 201 Fed. 368; Keasby & Mattison Co. v. Philip Cary Co. (C. C.) 113 Fed. 432. Contra, Onondaga Indian Wigwam Co. v. Ka-Noo-No Indian Mfg. Co. (C. C.) 182 Fed. 832, 833; Woods Sons Co. v. Valley Iron Works (C. C.) 166 Fed. 770. The opinion of Judge Severens in Globe Wernicke Co. v. Fred Macey Co., 119 Fed. 696, 56 C. C. A. 304 (C. C. A., 6th Cir.), is explained by the averment and fact of diversity of citizenship appearing in the record; and the opinion of Judge Knappen in Samson Cordage Works v. Puritan Cordage Mills, 211 Fed. 603, 128 C. C. A. 203 (C. C. A., 6th Cir.), discloses such diversity.

The decree in case No. 2443, concerning the Clark patent in suit, is

reversed and remanded, with costs, and the usual decree for injunction and accounting will be entered; and the decrees in cases Nos. 2444 and 2445 are each affirmed, with costs.

(217 Fed. 775)

DAVIS SEWING MACH. CO. v. NEW DEPARTURE MFG. CO.

(Circuit Court of Appeals, Sixth Circuit. October 16, 1914. On Petition for Rehearing, December 8, 1914.)

No. 2,428.

1. PATENTS (§ 328*)—VALIDITY AND INFRINGEMENT—COASTER BRAKE FOR BICYCLES.

The Townsend patent, No. 850,077, for a coaster brake for bicycles, covers a device the essential feature of which is a telescoping, screw-threaded connector within the hub of the rear wheel, movable to the right and left and revolvable both with and upon the driver sleeve, and which, when the pedal is driven forward, moves to the right and clutches the hub, and, when driven backward, moves to the left, releases the hub, and clutches the brake mechanism. In such feature it was not anticipated in the prior art, and, while not strictly a pioneer, the invention was the step which resulted in making practical and commercial the combination in one device of the driving, coasting, and braking functions, and the patent is entitled to a fairly liberal application of the rule of equivalents; its claims being not too broad to cover and protect the real invention. Also *held* infringed.

2. PATENTS (§ 101*) — VALIDITY — ELEMENTS DESCRIBED GENERALLY AS "MEANS" OR "MECHANISM."

A claim of a patent is not functional and invalid merely because one of its specified elements is "means" or "mechanism"; but such result may or may not follow, depending upon whether such all-inclusive term is used with reference to the element or subcombination which is the real point and gist of the invention, or to elements or parts already well known and designed to co-operate with the new element in order to make a completely operative unit.

[Ed. Note.—For other cases, see Patents, Cent. Dig. § 141; Dec. Dig. § 101.*

For other definitions, see Words and Phrases, First Series, Mechanism; also, First and Second Series, Means.]

3. PATENTS (§ 101*)—CONSTRUCTION—COMPARISON OF SPECIFIC AND GENERAL CLAIMS.

In determining whether the ambiguous terms of a claim should be confined more or less closely to the form shown in the drawings, it is usually well to compare with other claims which may not be in suit; and if other claims are found which call for the specific construction of a part mentioned more generally in the claims in suit that will be persuasive for not giving the limited construction to the general terms.

[Ed. Note.—For other cases, see Patents, Cent. Dig. § 141; Dec. Dig. § 101.*]

4. WORDS AND PHRASES—"BRAKE"—"BRAKE PAIR"—"BRAKE SHOE"—"BRAKE DRUM."

An effective "brake" consists of two members, which are called the "brake pair," consisting of the "brake shoe," which is the movable member, and the "brake drum," or the stationary member.

[Ed. Note.—For other definitions, see Words and Phrases, Second Series, Brake.]

---

*For other cases see same topic & § NUMBER in Dec. & Am. Digs. 1907 to date, & Rep'r Indexes

Appeal from the District Court of the United States for the Southern District of Ohio; Howard C. Hollister, Judge.

Suit in equity by the New Departure Manufacturing Company against the Davis Sewing Machine Company. Decree for complainant, and defendant appeals. Affirmed.

The New Departure Company brought suit against the Davis Company for infringement of claims 25–30, and claim 19, of patent No. 850,077, issued April 9, 1907, to Townsend, for a coaster brake for bicycles. There was the usual interlocutory decree for plaintiff, and defendant appeals. The parties will be named here as below. Their respective structures are shown in the following cuts, and claims 19 and 26 are given in the margin.[1] The other claims in suit are similar to 26.

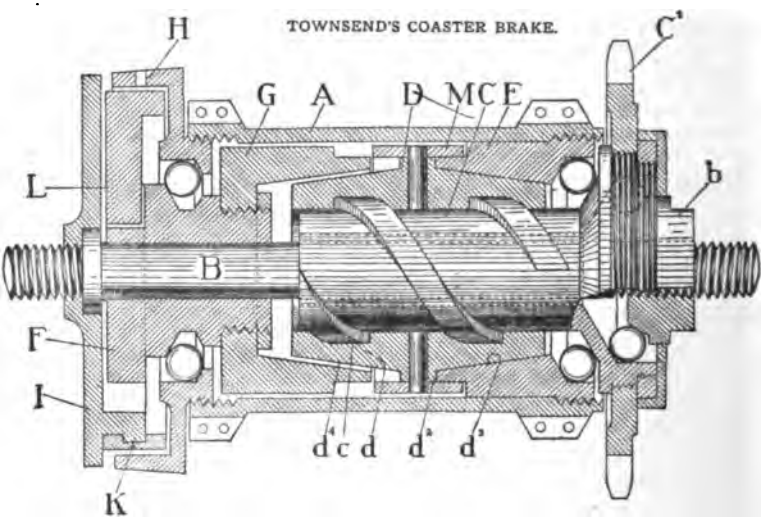

[1] Claim 19.—In a bicycle, the combination with a wheel hub and axle, of a brake mechanism, a driver for the hub and brake mechanism, a rotatable sleeve connected with the driver and mounted upon the axle within the hub, a laterally shiftable, rotatable sleeve mounted upon the sleeve of the driver and having tapered portions, a complementary spiral connection between said sleeves, and tapered clutch elements carried by the hub and brake mechanism with which the tapered portions of the shiftable sleeve may engage, substantially as described.

Claim 26.—A driving, coasting and braking mechanism for vehicles, comprising the combination with a wheel, a brake therefor, and a driver with relation to which said wheel can independently rotate, of a brake-anchoring device anchored to a relatively stationary structural element of the vehicle, a laterally shiftable connector which in one position operatively connects said driver with said wheel for driving the latter and in another position permits said driver to apply said brake, said connector having rotary movement with respect to said driver and said wheel being rotatable with respect to said connector, and threaded operating connection between said driver and said connector, substantially as described.

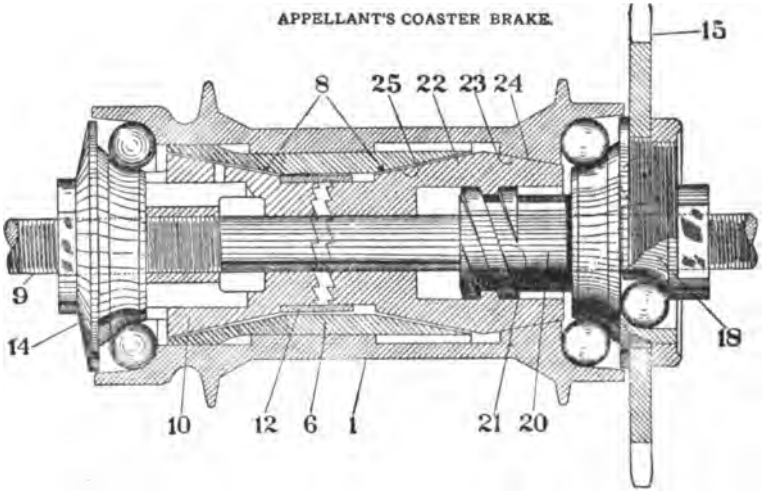

Prior to the Townsend patent, hub brakes, by which back pedaling produced a braking contact inside the hub, were common. Devices also had been made permitting the pedal and the hub-driving clutches to be disengaged, so that the rider could coast down hill with his feet stationary on the pedals. Townsend was not even the first to conceive the abstract desirability of providing mechanism by which the rider could, at his pleasure, drive the wheel forward by his pedaling, or make the pedals stationary while he coasted, or apply the brake by back pressure on the pedals; but he was the first to embody this idea in practical, efficient, commercial form. The operation of his device will be clear, from a brief description of the cut. *B* is the rear-wheel axle of a bicycle, fixed at each end in the frame (not shown) and held against revolution. At one end it has, rigidly attached, the disc, *I*, which carries the expansible split ring, *K*, intended to operate as a brake shoe. At the other end the axle carries the revolving sprocket wheel, C^1, driven by a sprocket chain from the pedal shaft; and extending inwardly from, and rigidly connected to, this sprocket wheel, is the sleeve, *C*, whereby this sleeve revolves with the sprocket freely around the axle in either direction. All the parts intermediate the sprocket and the disc at the other end are included within the revoluble hub, *A*. Obviously, a driving revolution imparted to the hub will impel the wheel, friction being minimized by suitable ball bearings, as shown. At the inner end the hub shell is extended and enlarged as shown, so that its interior surface forms a brake drum against which the split ring, *K*, may be expansibly forced into braking contact. Neither the sprocket and its attached sleeve, which form the driving mechanism, nor the parts at the other end, which make the braking mechanism, are permanently connected with the hub; and therefore, in what may be called the normal and is the coasting position of the parts, the hub and wheel freely revolve without much frictional contact with either driving or braking mechanism. The operative contact, necessary for these functions, is accomplished by and through a sleeve, *D*, which, for convenience, may be called the connector. It surrounds, and, except as limited by other parts, may be revolved upon, the driver sleeve, *C*; but interposed between the two is a thread and screw connection, so that, if the connector is held against rotating while the driver sleeve revolves, the connector necessarily moves longitudinally upon the driver sleeve one way or the other, according as the rotation is forward or back. As constructed, when the driver sprocket and the wheel are driven forward, the connector is moved to the right; upon a back pedal pressure, the connector moves to the left. The right-hand end of the connector is given an exterior taper, and the adjacent part of the hub a corresponding interior taper; so, as the connector

moves to the right, these two parts constitute a friction clutch, which, as the forward pressure is maintained, lock together the driver sleeve, the connector and the hub, and the wheel is driven forward. The greater the driving pressure, the more perfect the clutch. When the motion of the sprocket is reversed by back pressure, the connector is at once carried to the left, and, after slight travel in this direction, its tapered left-hand end becomes one member of the friction clutch, the other member of which is attached to a rocking sleeve surrounding the axle. When this rocking sleeve is so locked by this friction clutch to the connector, it makes part of a revolution until a lever which it carries comes in contact with the split ring, *K*, expanding this against the brake drum carried by the hub, and so completing the brake action. Obviously, the greater the backward pressure applied to the sprocket, the greater the braking pressure applied to the brake drum. Obviously, too, when there is pressure in neither direction upon the sprocket, the hub is disconnected from driver and from brake. To insure that the connector shall not rotate with the driver sleeve until it has nearly or quite reached its clutching position at one or the other end of its travel, Townsend provides a lag spring, marked *M*; but its detailed operation need not be described.

Edward Rector, Frank Parker Davis, and Russell Wiles, all of Chicago, Ill., for appellant.

G. P. Moore, of Bristol, Conn., and Melville Church, of Washington, D. C., for appellee.

Before WARRINGTON, KNAPPEN, and DENISON, Circuit Judges.

DENISON, Circuit Judge. [1] As in every patent case, the court must select that method of approach to the crucial questions which seems to furnish the simplest and clearest solution; and, in the present case, it seems to us best to inquire: First, what were the scope and extent of Townsend's real invention, as shown by comparison with the state of the art? Second, does the defendant employ this invention? And, if so, then, third, do the terms of the patent grant fairly permit a construction which will cover the form of the invention so appropriated by defendant?

We are satisfied that the substance of Townsend's invention, its real inventive novelty, its meritorious forward step, are found in his creation of this connector, movable to the right and left inside the hub, clutching the hub at one end of its travel, at the other end of such motion clutching the brake mechanism, and, in its intermediate position, clutching neither. Whether its telescoping form with reference to the driving member and its thread and screw connection therewith were included in the foundation of his invention, or were only selected and nonessential forms, may be important in some future controversy. In this case it appears that defendant uses these more specific features, and so we hereafter assume, for the purposes of this case, that these two things are essential characteristics of the invention.[2] The peculiar means by which this shiftable connector at one time firmly unites the hub to the driving sprocket, and at another time firmly joins the brake to the driving sprocket, constitute only the environment of Townsend's invention. These things were neces-

[2] Some of the claims do not specify "telescoping" or "screw-threaded," but say that the connector has "rotary movement" upon the driver. This is the same thing, so far as now involved.

sary, in order to give the invention its operative field; but they were not, of themselves, of the body or essence of his primary inventive thought.

The prior art shows various forms of driving connections between the sprocket and the hub, released by back pedaling, and various forms of brakes so constructed that the two members of the braking pair were forced into contact by back pedaling pressure; but nowhere do we find any construction that fairly discloses this shiftable connector, screw-threaded upon the driver sleeve, revolvable both with and upon that sleeve, and clutching one mechanism, or the other, or neither, as it moves back and forth. We do not overlook the patent to Carver, No. 160,570, March 9, 1875, for a friction pulley. This contains the germ of the idea; but its modification and adaptation from the friction pulleys of a factory to the hub of a bicycle we think is, clearly enough, invention.

The Brewster patent, No. 713,594, November 18, 1902, and the connected testimony regarding early use, even if they established a sufficiently early date, would not demonstrate any lack of patentable novelty in Townsend's connector as we have described it. Brewster undertook to accomplish his objects by a loosely mounted sprocket having wedge-shaped cams on its vertical surface, which, upon reverse motion, would constitute a friction clutch with a loosely mounted disc having corresponding wedge-shaped cams, and would force this disc laterally into braking contact with a hub surface. The practical efficiency of this device is, at best, left doubtful by the testimony; and the Brewster patent and device chiefly serve to emphasize the thought that Townsend's invention was not in the driving clutch or in the braking mechanism, but was in the telescoping, screw-threaded connector sleeve, clutching, at the pleasure of the rider, the driving mechanism, or the braking mechanism, or neither.

The patent to Priest & Priest, No. 623,825, of April 25, 1899, might or might not need more careful consideration, if it was early enough; but there is nothing tending to carry it back of its date of filing, September 28, 1898, while Townsend's original application, though filed October 10, 1898, was executed September 19, 1898, and the proof is clear enough that Townsend's invention was perfected and in use in the summer of 1898. The Priest & Priest patent, therefore, needs no attention.

From our review of the prior art and the alleged anticipations or limitations, we are satisfied that Townsend's invention is essentially measured by this shiftable sleeve connector in this surrounding and application, and that his invention, while not rightly to be called pioneer, was the step which resulted in making practical and commercial the combination in one device of the driving, coasting and braking functions, and that his invention is entitled to a fairly liberal application of the rule of equivalents.

If this connector is the characterizing feature of Townsend's improvement, it is hardly to be doubted the defendant uses the invention. Referring again to the cuts, it will be seen that defendant has the Townsend sprocket, driver sleeve, shiftable connector, and threaded

engagement between the two latter, almost precisely like Townsend. Indeed, no difference is said to exist, save in the means of clutching the brake mechanism and in the braking mechanism itself. The extent of these differences and what effect they have on the question of infringement must be reserved to consider in connection with the true meaning of the claim. It is enough to say at present that the shiftable connector sleeve, with the characteristic functions which have been described, and which we have found constituted the real and substantial advance which Townsend had made in the art, has been appropriated and is being used by defendant without material change of form.

Having thus found what Townsend invented, and that it has been taken by defendant, we come to the inquiry whether, through indifference or otherwise, the patent grant was so limited that it does not give to Townsend a monopoly of his real invention; and this requires that we first observe the departures which the defendant has made in its brake clutch and brake mechanism.

[4] An effective brake consists of two members, which may be called a brake pair, and which we have spoken of as the brake shoe and the brake drum. This terminology implies that the relatively movable member be called the shoe and the stationary one the drum. It cannot make any particular difference which member revolves. In a bicycle structure, the axle is fixed, the hub is revolving, and the two parts of the brake pair are essentially the axle member and the hub member. The drum, as above defined, may be attached to the axle or to the hub. The relatively movable shoe may be pressed, radially, from the axle against the drum on the hub, or from the hub against the drum on the axle. Both forms were common. So, also, before Townsend's invention, brake drums had taken two forms: A cylindrical surface, against which an expanding or contracting ring was radially forced, and a tapered or conical surface, longitudinal of the axle, against which a corresponding tapered or conical hub surface was longitudinally forced. Townsend, like all others, could use any of these forms. He selected and illustrated the cylindrical and expanding ring form of brake that has been described. The defendant selected the conical form. It attached firmly to the axle (and anchored to the frame) the tapered nut, *10*, and this became the relatively stationary member of the brake pair, or, as we have called it, the brake drum. Defendant then provided, within the hub, a sleeve which he splined to the interior surface of the hub, so that it must revolve therewith, but was longitudinally slidable therein. This sleeve is shown in the cut by the numeral *6*. It was tapered at both ends corresponding to the tapers in the adjacent surfaces of the connector and the brake drum. When the driver sleeve receives back pressure and the connector is driven to the left, it makes contact with this sleeve, *6*, and pushes the same along until the taper at the other end of the sleeve contacts with the brake drum. Then, as the lateral motion continues, it may be assumed that the connector and the right half of the sleeve, *6*, lock together with an efficient friction clutch, in which case the left half of the sleeve obviously becomes the shoe member of the brake

pair, and the braking effect is obtained. Defendant also provides complementary teeth, which make a positive lock between the connector and the brake drum when the connector reaches the extreme left-hand position; but the office of these interlocking teeth is wholly supplementary to the functions of Townsend's patent. They serve to maintain the braking effect after it is once established, and so lessen the muscular effort otherwise required in maintaining the back pedal pressure. They cut no figure on the question of infringement.

Defendant says that by the double taper of its interior hub sleeve it gets a double braking effect, part at each end. This may be true, but it is immaterial. If defendant uses the Townsend shiftable connector, at one point clutching the hub for driving, and at another point clutching the part which actuates the brake shoe, it is immaterial that it gets a supplementary braking effect somewhere else. Indeed, the difference between a friction clutch and a brake, in this situation, cannot be determined. Until the two members of the pair are so set that relative motion ceases, they constitute, mechanically, a brake, no matter if they have been called a clutch. When they are so set, they constitute a clutch, no matter if they have been called a brake.

Returning, now, to the terms of the claims, and selecting No. 19, we find that it clearly reads upon defendant's structure. Only two suggestions to the contrary are made. It is first said that, while the hub carries a tapered clutch element with which the right-hand end of the connector (shiftable sleeve) may engage, the brake mechanism carries no tapered clutch element with which the left-hand end of the connector may engage, but that the tapered clutch element with which the left-hand end of the connector engages is carried by the hub and not by the brake mechanism. It is not clear that there would be a material departure from the claim if a specified element was carried by one instead of by the other of two named co-operating parts; but however that might be, and giving defendant the benefit of this argument, it still is true that the left-hand end of this hub sleeve, *6*, is the brake shoe, one member of the brake pair, and, therefore, a part of the brake mechanism; and so it is literally correct to say that the right-hand end of this hub sleeve is a taper clutch element, with which the connector may engage, and which is itself integral with, and is therefore carried by, part of the brake mechanism.

The other suggestion is that unless the call of the claim be restricted to the form of brake mechanism shown in the drawing or its equivalent —in other words, if it calls for any suitable brake mechanism—the claim is too broad, because really for a function, and so is invalid under the rule of Westinghouse v. Boyden, 170 U. S. 537, 18 Sup. Ct. 707, 42 L. Ed. 1136. The principle of the Westinghouse Case is not applicable here. There the abstract idea involved in the invention was that the preliminary traverse of the piston should admit air from the reservoir to the brake cylinder, and that a further traverse of the same piston should admit air directly from the main air pipe to the brake cylinder. This abstract idea was given embodiment by the inventor through an auxiliary valve operated by the further traverse of the piston, and this auxiliary valve (with its equivalents and in association

with the parts of the older patent) constituted the thing of which, under the patent law, the inventor was entitled to a monopoly. The second claim, as construed by the court, went further, and undertook to claim the abstract idea involved, or, in other words, the function of the piston in its further traverse. The real analogy between that case and this rests on the fact that in one the auxiliary valve and in the other the shiftable connector formed the substance of the inventive advance over the old art.

In order to make the Westinghouse Case so parallel as to require here a conclusion of invalidity, we must find therein a holding that a claim which included as an element the auxiliary valve which constituted the invention, and also included the piston which only furnished operative surroundings for the invention, was invalid, because it covered any kind of piston rather than the variety shown in the drawings; and the case carries no such thought. To perfect the parallel from the other point of view, we must suppose a claim which specified as an element, not the form of connector which Townsend had invented, but any connecting means clutching the hub mechanism on one motion and the brake mechanism on the reverse motion. Some of the claims of the Townsend patent are subject to plausible attack on this theory; but not so, we think, of the selected claims in suit. These claims do not extend to every means by which a forward motion makes one connection and a reverse motion makes the opposite connection, nor even to every form of a laterally shiftable connector housed within the hub. They are confined to what is, in this respect and comparatively speaking, a specific embodiment of this function, viz., the connector sleeve, telescoping on the driver sleeve, driven longitudinally thereon by the intermediate screw-thread connection, effecting a taper clutch at each end of its travel and being released from both clutches at its intermediate position.

[2] Reliance is also placed upon the opinion of this court, speaking by Judge (afterwards Mr. Justice) Lurton, in Tyden v. Ohio Table Co., 152 Fed. 183, 81 C. C. A. 425. In this case, the claim calling for "means" was held invalid because it covered all means for accomplishing the result, and so was functional. We do not question the application of the rule as made to the facts of that case; but we do not understand that a claim is functional and invalid merely because one of its specified elements is "means," as in the Tyden Case, or "mechanism," as in the present case. This result may or may not follow, depending upon whether the all-inclusive term is used with reference to the element or subcombination which is the real point and gist of the invention, or whether it is used with reference to elements or parts of the combination already well-known and designed only to co-operate with the new element in order to make a completely operative unit. In other words, where used with reference to the exact point of novelty, "means" or "mechanism" may expose the claim to attack on the ground that it is functional; in that respect, each case will present a problem by itself. But where used with reference to the make-up of the field in which the real invention finds its usefulness or with reference to the connecting parts which permit the salient

novelty of the invention to accomplish its function, these words are only a convenient formula of the broadest equivalency of which the real invention permits. Their use amounts to a statement by the inventor that, as to this element, the claim is not confined to the form shown, nor to any close imitation of that form, but extends as broadly as is consistent with the extent of his inventive step to all forms accomplishing that part of the ultimate, composite result, and, of course, does not, of itself, prevent the court (where the state of the record requires) from interpreting the claim as limited to a more or less close approximation to the "means" described in the specification. Rich v. Baldwin (C. C. A. 6) 133 Fed. 920, 923, 66 C. C. A. 464; Kellogg Co. v. Dean Co. (C. C. A. 6) 182 Fed. 991, 1003, 105 C. C. A. 545.

That the Supreme Court has not intended, either in the Westinghouse-Boyden Case or in other instances where claims have been held void because functional, to predicate this result merely on the presence of the word "means," "mechanism," etc., is apparent. In Morley Co. v. Lancaster, 129 U. S. 263, on page 286, 9 Sup. Ct. 299, 32 L. Ed. 715, there was an extreme instance. The claim was for the combination of three elements: "Button-feeding mechanism; appliances for, etc.; and feeding mechanism." The objection that this and other similar claims were void on their face because for a function could not have escaped the attention of Mr. Justice Blatchford, who wrote the opinion sustaining their broad validity; indeed he expressly said that these claims were not for the result or effect, irrespective of the means employed. The case being, however, one of the class where the vital point of the invention—the making of the combination of these different sets of mechanism—was expressed in these general terms, it was ruled that they did not cover every possible means, but yet must be treated as terms of very considerable scope and inclusiveness. In the latest reported decision touching this point, Paper Bag Patent Case, 210 U. S. 405, 422, 28 Sup. Ct. 748, 752 (52 L. Ed. 1122), the claim called for the combination of a rotating cylinder, forming plate, and "operating means for the forming plate adapted to cause the said plate to oscillate about its rear edge, etc." (The claim included other mention of "means" as elements, but this is the one to which the opinion refers.) It was argued that, by extending the patent to cover a device in which the defendants used very different means of causing a forming plate to oscillate about its rear edge, the court below had given the patentee a patent for a function. The Supreme Court held, in effect, that the use of these general terms is not objectionable in cases where the element so identified serves to provide a "working relation" for what may be called the more primary elements of the combination. Mr. Justice McKenna says:

> "The distinction between a practically operative mechanism and its function is said to be difficult to define. Robinson on Patents, § 144 et seq. It becomes more difficult when a definition is attempted of a function of an element of a combination which is the means by which other elements are connected and by which they coact and make complete and efficient the invention. But abstractions need not engage us. The claim is not for a function, but for a mechanical means for bringing into working relation the folding plate and the cylinder."

The Patent Office practice, in the shaping of claims with reference to these phrases, has vacillated. After some of the early court decisions disapproving the particular uses of these words which were involved in the cases decided, the Patent Office was inclined to forbid their use; but this confusion later settled down into the clearly established rule that these words would not be permitted where the novelty of the invention was in the specific mechanism to which they were intended to refer, but would be approved when they described "mere adjunctive devices which connect or give co-operation to the various elements or features of the invention, but are in themselves no actual controlling part of it." Ex parte Paige, 40 O. G. 807, 810; Ex parte Pacholder, 51 O. G. 295; Ex parte Halfpenny, 73 O. G. 1135. Pursuant to this rule regulating the "substantive" and the "adjunctive"—which we consider only another form of words for the distinction we have expressed—the great majority of patents during the last few years have contained claims identifying certain elements as for "means," "mechanism," "devices," etc.

In none of the cited decisions of this court especially relied upon in argument[3] do we find any holding that a claim calling for "means" is thereby, and thereby only, made functional; but, if there were any such holding, it must yield to the rule of the Paper Bag Case. These considerations demonstrate to us that the call of claim 19 for "a brake mechanism" does not make the claim functional or invalid, and that this claim is infringed. The same considerations govern the use of similar phrases and terms in claims 25–30.

[3] In determining whether the ambiguous terms of a claim should be confined more or less closely to the form shown in the drawings, it is usually well to compare with other claims which may not be in suit; and if we find other claims which call for the specific construction of a part mentioned more generally in the claims in suit, that will be a persuasive reason for not giving the limited construction to the general terms. That test is not applicable here, because no one of the claims in the Townsend patent calls for anything more particular than a "brake" or "brake mechanism," etc.; but the reason for this omission is found in the specification, which informs us that this patent is not intended to reach the particular form of brake which Townsend has devised, but that he reserves for another copending application the claims which relate to that part of his invention. This situation emphasizes and confirms our conclusion from the face of the claims in suit, viz., that they do not refer to and are not confined to any particular form of brake or brake mechanism.

We should reach the same result, if we considered the calls for a brake and brake mechanism from the point of view of substantial equivalency for the form shown in the drawing. Considering the reasonable range of equivalents to which Townsend is entitled, and the fact that both his general form of the braking mechanism and the de-

[3] Columbus Co. v. Robbins, 64 Fed. 384, 12 C. C. A. 174; Western Co. v. Williams Co., 108 Fed. 952, 48 C. C. A. 159; Rich v. Baldwin, 133 Fed. 920, 66 C. C. A. 464; Wessell v. United Co., 139 Fed. 11, 71 C. C. A. 423; American Co. v. Sexton, 139 Fed. 564, 71 C. C. A. 548.

fendant's general form were well known, defendant has made no vital departure. In each case, the left-hand travel of the connector brings it into engagement with the clutch element housed in the hub. In each case the clutch element is thereby actuated, and, in turn, directly or indirectly actuates the brake shoe and drives it against the brake drum. Defendant's transposition of the drum from the hub to the axle, and of the shoe from the axle to the hub, is not, speaking broadly, a material change. The same elements coact and produce the same braking result. Although the manner of their coaction is not identical, it is similar enough to justify the requirements of the equivalency rule in this case.

The lag spring forms an element of claims 27 and 28; but defendant uses substantially the same spring in the same location and arrangement, and so these claims present no further question on this account.

The decree below is affirmed, with costs.

On Petition for Rehearing.

Defendant's petition for rehearing forcefully again presents one position not considered in the opinion filed. The opinion assumes that defendant's interior hub sleeve *6* is the "tapered clutch element carried by the hub," of claim 19, and that it provides the clutching function at the left-hand end of the connector which is called for when the opinion defines Townsend's invention as residing in the "connector sleeve clutching at the pleasure of the rider the driving mechanism or the braking mechanism or neither." This assumption in the opinion is now challenged because (it is said) this hub sleeve is not a clutch at all, and performs no clutching function, but is one member of a brake pair, and is nothing else.

As matter of strict terminology, the opinion was wrong in calling this hub sleeve a "clutch," or a "clutch element"; but we think that this precision in name is not a matter of substance, and that the hub sleeve is fairly within that breadth of definition which, from the record, should be given to "clutching" and "clutch element." Here, again, we must notice, as pointed out in the opinion, the frequent lack of structural distinctions and the uncertain functional distinctions between a clutch and a brake. Not only is a clutch a brake while the clutch is being set, but while a brake of this class is being set it is a *slipping* clutch. Hence it is obvious that the name by which the part happens to be designated is not, of necessity, controlling. Ordinarily, we think of a clutch as a device by which two separable members are made continually to revolve in unison; but Townsend, when speaking of a clutch element at the left-hand end of his connector, did not use the term in this full sense, since his clutch socket *G* and its attached rocking actuator could turn only a small fraction of one revolution. The fact is that the left-hand motion of the connector operates to push an intermediate element which, in turn, pushes one of the brake members. As the motion called for by Townsend's form was rotary, he calls this intermediate element a clutch element. His specification calls it merely "a suitable clutch whereby" the connector sleeve may be connected with the brake actuator.

When the tapered left-hand end of defendant's connector sleeve moving to the left first makes contact with the taper socket in the end of the hub sleeve, there is no effect, except that the hub sleeve is pushed longitudinally. As soon as the limit of this motion is reached, there is a tendency for the connector sleeve and the hub sleeve to set together and to revolve in unison. This is a clutching tendency, and it takes partial effect, but cannot take full effect, because one member cannot revolve. Eventually, when and while the members are set together, neither can revolve, except in unison with the other, and this again discloses a clutching function.

While, as above pointed out, the mutual engagement of Townsend's left-hand taper sleeve and its taper socket is not, in the extremest sense, "clutching," it is properly enough so called in the specification and the claim; but "clutching" is only the form of engaging appropriate to actuate Townsend's form of brake. The real ultimate function is to "engage and actuate"; and the mere use in the claim of the name "clutch element" does not prevent extending it to cover an element which, though it engages and actuates, and though it looks like a clutch, and though part of the time it acts like a clutch, yet is not merely a clutch all the time. We do not intend hereby to adopt a construction for claim 19 which will make it coextensive with certain other claims not in suit, which call for any means of engaging instead of for taper clutch elements. There is room for distinction.

The suggestion in the opinion that "it may be assumed that the connector and the right half of the sleeve, *6*, lock together with an efficient friction clutch," implies inaccuracy when thus stated. They do not lock together until the revolution stops; the existing tendency to lock together is resisted and retarded. The definitions in the opinion which incorporate the clutching function should say "clutching or equivalently engaging," and, so reformed, are not open to the criticisms now urged. That the method of engaging and actuating employed by defendant at this end of the connector, if, indeed, it is not "clutching," is equivalent, is, we think, sufficiently shown by what has been here said about its operation and what was said in the opinion regarding the field of equivalency.

The petition also presents a supposititious structure in which the left-hand end of the connector and the right-hand end of the hub sleeve are not tapered, but have vertical, parallel faces, and the left-hand movement of the connector operates only to push the hub sleeve along into a braking contact at its other end. It is said that here the taper clutch element would disappear. This supposed construction presents questions of equivalency, and of uniting in one part the functions of two, or the converse, which are not necessarily involved in deciding this case. It is sufficient to say of them as we said in Grever v. Hoffman Co., 202 Fed. 923, 927, 121 C. C. A. 281, 285:

> "It will be time enough to consider that question, if such a machine is ever built and works well enough to justify an infringement suit."

The petition for rehearing is denied.

(217 Fed. 243)

SMITH v. BELL.

(Circuit Court of Appeals, Eighth Circuit. October 12, 1914.)

(Syllabus by the Court.)

1. COURTS (§ 311*)—MORTGAGES (§ 427*)—JURISDICTION OF FEDERAL COURT—FORECLOSURE.

The citizenship and residence of the trustee in a mortgage to secure the payment of a claim owned by another, and not those of such owner, condition the jurisdiction by a national court of a suit to foreclose the mortgage, because the trustee is, and the cestui que trust is not, an indispensable party to the suit.

[Ed. Note.—For other cases, see Courts, Cent. Dig. § 858; Dec. Dig. § 311;* Mortgages, Cent. Dig. §§ 1269, 1272–1287; Dec. Dig. § 427.*

Mortgage foreclosure in federal courts, see note to Seattle, L. S. & E. Ry. Co. v. Union Trust Co., 24 C. C. A. 523.]

2. GAS (§ 13*)—BREACH OF CONTRACT—PLEADING.

A pleading that one failed to operate wells and furnish gas therefrom continuously discloses no breach of a covenant to sell the surplus such wells may produce.

[Ed. Note.—For other cases, see Gas, Cent. Dig. §§ 5–9; Dec. Dig. § 13.*]

Appeal from the District Court of the United States for the Eastern District of Oklahoma; Frank A. Youmans, Judge.

Action by John A. Bell, Jr., against P. F. Smith. From decree for plaintiff, defendant appeals. Affirmed.

H. B. Martin and A. F. Moss, both of Tulsa, Okl., for appellant.

James A. Veasey and J. P. O'Meara, both of Tulsa, Okl., for appellee.

Before SANBORN and CARLAND, Circuit Judges, and REED, District Judge.

SANBORN, Circuit Judge. The defendant below, P. F. Smith, complains of a decree of foreclosure of a mortgage he made to John A. Bell, Jr., because the court below struck out of his answer that part by which he sought to question the jurisdiction of the court and that part by which he sought to set up a counterclaim and set-off.

The complaint pleaded the mortgage and the notes it secured, and copies of them were attached to it. The mortgage and the notes ran to John A. Bell, Jr., trustee, and the mortgage provided that the defendant should keep the buildings and personal property described therein insured, with the loss payable to Bell or his successors in trust; that if default should be made in any of the conditions of the mortgage the whole sum intended to be secured by the mortgage should, at the option of Bell, or his successors in trust, or any other legal holder of the indebtedness, become due; and that any or either of them should then have full right and authority to take possession of the premises mortgaged and to foreclose the mortgage.

[1] The plaintiff alleged in his complaint, and the defendant admitted in his answer, that the former was a resident and citizen of the state of Pennsylvania and that the latter was a resident and citi-

*For other cases see same topic & § NUMBER in Dec. & Am. Digs. 1907 to date, & Rep'r Indexes

zen of the state of Oklahoma; but the defendant alleged that the Standard Oil & Gas Company of Bartlesville, Okl., was the owner and holder of all the beneficial interest in the notes and mortgage and the real party in interest in the case, that that company was a citizen and resident of the state of Oklahoma, and that for that reason the court below had no jurisdiction of the suit. It was this portion of the answer that defendant first insists it was error for the court to strike out. But by the terms of the stipulation made by the defendant in the mortgage he expressly agreed that upon default in the conditions thereof either Bell, the trustee, or his successor in the trust, might take possession of the property and foreclose the mortgage, and he is thereby estopped from denying the competency of the trustee so to do. The legal title to the mortgage was in the trustee. He was the indispensable party plaintiff in the suit, and while the owner of the notes, the beneficiary of the trust, may have been a proper party, it was not an indispensable one, and its citizenship was immaterial to the jurisdiction of the court below. The citizenship and residence of the trustee in a mortgage to secure the payment of a claim owned by another, and not those of such owner, condition the jurisdiction by a national court of a suit to foreclose the mortgage, because the trustee is, and the cestui que trust is not, an indispensable party to the suit. Dodge v. Tulleys, 144 U. S. 451, 455, 456, 12 Sup. Ct. 728, 36 L. Ed. 501; Rust v. Brittle Silver Co., 58 Fed. 611, 612, 7 C. C. A. 389, 390; Johnson v. City of St. Louis, 172 Fed. 31, 41, 96 C. C. A. 617, 627, 18 Ann. Cas. 949; Allen West Commission Co. v. Brashear (C. C.) 176 Fed. 119, 121; Knapp v. Railroad Co., 20 Wall. 117, 122, 123, 22 L. Ed. 328; Gardner v. Brown, 21 Wall. 36, 41, 22 L. Ed. 527; Mexican Central Ry. Co. v. Eckman, 187 U. S. 429, 23 Sup. Ct. 211, 47 L. Ed. 245.

[2] The portion of the answer which sought to set up a counterclaim or set-off made an agreement between the Standard Oil & Gas Company, the cestui que trust under the mortgage, a part of the answer, and alleged a breach of it by that company in these words:

> "That the said Standard Oil & Gas Company, from time to time from the said 3d day of January, 1912, until about the 15th day of November, 1912, continued to own and operate the aforesaid oil wells, but failed, neglected, and refused to operate said wells continuously, frequently permitting the operation of their said wells to lapse and be discontinued for considerable periods of time, thereby interrupting the supply of gas necessary for the operation of defendant's plant, so that defendant's machinery and labor necessary for operating the same were obliged to lie idle for many days, to defendant's great injury and damage in the sum of five thousand dollars."

But repeated perusals and careful consideration of the agreement have disclosed no promise or covenant by the oil company to operate its oil wells continuously or to furnish an uninterrupted or sufficient supply of gas for the operation of the defendant's plant. On the other hand, the oil company by an express stipulation of the contract reserved to itself sufficient gas to operate its leases, and the extent of its obligation to furnish gas to the defendant was that so long as the leases owned by it on January 3, 1912, when the agreement was made, within a radius of two miles from defendant's plant, or other leases

thereafter acquired by it within such radius, should, after reserving sufficient gas to operate its leases, "produce casing-head gas in sufficient quantities to be desirable for manufacture in said plant," it would sell such gas to the defendant for three cents per cubic foot. The contract contains no covenant by the oil company to operate its wells continuously or at all, none to produce sufficient or any gas to operate the defendant's plant, nothing but a promise to sell whatever gas they do produce in excess of the gas required to operate them at three cents per cubic foot so long as the wells produce an excess sufficient to make it desirable for manufacturing purposes in the defendant's plant, and the answer contains no allegation that the wells produced such an excess, or that the oil company failed or refused to furnish any of the excess actually produced.

The result is that this portion of the answer failed to state facts sufficient to state a cause of action, counterclaim, or set-off against the oil company or the plaintiff, there was no error in striking it out, and the decree below must be affirmed.

It is so ordered.

(217 Fed. 245)

THE CURTIN.

(Circuit Court of Appeals, Fourth Circuit. September 8, 1914.)

No. 1245.

1. COLLISION (§ 18*)—LIABILITY—NEGLIGENCE NOT A PROXIMATE CAUSE.
   Acts of negligence which do not contribute to a collision as a proximate cause do not render a ship liable.
   [Ed. Note.—For other cases, see Collision, Cent. Dig. § 16; Dec. Dig. § 18.*]

2. COLLISION (§§ 149, 153*)—SUITS FOR DAMAGES—FINDINGS OF FACT—REVIEW.
   Whether negligence imputed is the proximate cause of a collision, or merely collateral or immaterial, is a question of fact; and, where the conclusion of the District Court is not against the preponderance of the evidence, it cannot be disturbed by an appellate court.
   [Ed. Note.—For other cases, see Collision, Cent. Dig. §§ 149, 299–301, 305–307, 310, 311; Dec. Dig. §§ 149, 153.*]

3. COLLISION (§ 105*)—STEAM VESSELS MEETING—CHANGE OF COURSE.
   A finding that a collision on the Elizabeth river in the evening between a gasoline launch and a meeting tug was due solely to the fault of the tug in changing her course shortly prior to the collision *held* supported by the evidence; it appearing that until such change the vessels were on safe courses.
   [Ed. Note.—For other cases, see Collision, Dec. Dig. § 105.*]

Appeal from the District Court of the United States for the Eastern District of Virginia, at Norfolk; Edmund Waddill, Jr., Judge.

Suit in admiralty by William S. Bensten, owner of the gasoline launch Cecilia, against the steam tug Curtin, Charles Gring claimant. Decree for libelant, and claimant appeals. Affirmed.

For opinion below, see 205 Fed. 989.

---

*For other cases see same topic & § NUMBER in Dec. & Am. Digs. 1907 to date, & Rep'r Indexes

Ralph H. Riddleberger, of Norfolk, Va. (Riddleberger & Roper, of Norfolk, Va., on the brief), for appellant.

R. M. Hughes, Jr., of Norfolk, Va. (Hughes, Little & Seawell, of Norfolk, Va., on the brief), for appellee.

Before PRITCHARD and WOODS, Circuit Judges.

WOODS, Circuit Judge. On December 18, 1911, the gasoline launch Cecilia was going up the Elizabeth river from Hampton Roads to Norfolk. The tug Curtin was coming down the river on the south or Portsmouth side of the river near the middle of the stream on its way to Pinner's Point. The tug Pinner's Point with a barge alongside was crossing the river from Pinner's Point to Ft. Norfolk. The Cecilia and the Curtin collided astern the Pinner's Point, with the result that the Cecilia was sunk. The District Court held the Curtin entirely at fault, and adjudged that William S. Bensten, owner of the Cecilia, should recover of the Curtin and its owners $1,566.52. There is no substantial difference as to the law. While the testimony in its details is irreconcilable and confusing, we think the controlling fact is established by the preponderance of the evidence. The witnesses differ somewhat as to the precise point of collision, but they agree that it occurred near midstream at about 5:45 in the afternoon.

The master of the Cecilia admits hearing two whistles from the Pinner's Point, and the answer of two whistles from another vessel, which turned out to be the Curtin, indicating the intention of the answering vessel to pass astern of the Pinner's Point. The fact that the master of the Cecilia held his course up and gradually across the stream and astern of the Pinner's Point without giving any signal, and with knowledge from the signal of the Curtin that a down-going vessel was about to pass astern of the Pinner's Point, would be fatal to his claim of exemption from blame, if this course of conduct contributed as a proximate cause to the collision. But we think the preponderating evidence shows that it did not. The master of the Cecilia testified that he did not signal the Pinner's Point because she was so far away that a signal was unnecessary. The master of the Norfolk and the master of the Pinner's Point, both impartial witnesses, corroborate his statement that the Cecilia and the Curtin were showing green to green, and would have passed each other safely but for the sudden change of course of the Curtin toward the Cecilia, after the Pinner's Point had passed.

There was evidence that the Cecilia was out of the course prescribed by the rules, and this, together with the signal of the Curtin, might well be held to impose upon the Cecilia the burden of keeping out of the way of the Curtin. Assuming that she was bound to keep out of the course of the Curtin, the evidence that there was no danger to either vessel until the Curtin changed her course tends to show that she discharged this duty—that she did nothing which put either vessel in danger, and that the cause of the collision was the Curtin's change of course. Singleton, the mate of the Curtin, who was navigating her, is alone in his testimony that the collision was caused by the Cecilia changing her course and trying to cross his bow, and that the master of the Cecilia when taken on his vessel and asked his reason for the change did not deny it.

[1] Acts of negligence which do not contribute to the accident as a proximate cause do not render a ship liable, even under the American as distinguished from the English rule of liability. The Oregon, 158 U. S. 186, 15 Sup. Ct. 804, 39 L. Ed. 943; The City of Macon, 92 Fed. 207, 34 C. C. A. 302; The Lord O'Neill, 66 Fed. 77, 13 C. C. A. 337; Marsden on Collisions at Sea (6th Ed.), 14.

[2] Whether negligence imputed is the proximate cause or merely collateral or immaterial is a question of fact, and where the conclusion of the District Court is not against the preponderance of the evidence it cannot be disturbed.

[3] It seems clear beyond dispute that the proximate cause of the collision was the negligent change of course by one or the other of the vessels. Enough of the evidence has been set out to show that the preponderance supports the finding of the District Judge that the courses of the two vessels were safe, that it was the Curtin that suddenly changed her course and struck the Cecilia, and that the danger of such a change would have been evident if the Curtin had had an adequate watch.

Affirmed.

(218 Fed. 165)

LAKE SHORE ELECTRIC RY. CO. v. KURTZ.

(Circuit Court of Appeals, Sixth Circuit. November 13, 1914.)

No. 2500.

1. MASTER AND SERVANT (§ 286*)—ACTION FOR INJURY TO SERVANT—QUESTIONS FOR JURY.

Evidence considered, in an action by the conductor of an electric car to recover for an injury received by being thrown from the car by reason of its alleged sudden reduction of speed while passing through an open switch, causing the car to lurch, and *held* to justify the submission of the case to the jury under the statutes of Ohio, making the negligence of a fellow servant that of the employer and adopting the rule of comparative negligence.

[Ed. Note.—For other cases, see Master and Servant, Cent. Dig. §§ 1001, 1006, 1008, 1010–1015, 1017–1033, 1036–1042, 1044, 1046–1050; Dec. Dig. § 286.*]

2. APPEAL AND ERROR (§ 927*)—REVIEW—REFUSAL TO DIRECT VERDICT.

A federal appellate court, on review of the denial of a motion to direct a verdict, cannot determine questions of credibility of witnesses, and must take that view of the evidence most favorable to the party against whom the direction was asked.

[Ed. Note.—For other cases, see Appeal and Error, Cent. Dig. §§ 2912, 2917, 3748, 3758, 4024; Dec. Dig. § 927.*]

In Error to the District Court of the United States for the Northern District of Ohio; William L. Day, Judge.

Action at law by Harry J. Kurtz against the Lake Shore Electric Railway Company. Judgment for plaintiff, and defendant brings error. Affirmed.

T. H. Hogsett, of Cleveland, Ohio, for plaintiff in error.

R. B. Newcomb, of Cleveland, Ohio, for defendant in error.

---

*For other cases see same topic & § NUMBER in Dec. & Am. Digs. 1907 to date, & Rep'r Indexes

Before WARRINGTON, KNAPPEN, and DENISON, Circuit Judges.

PER CURIAM. This review involves an alleged error in refusing to direct verdict for defendant. Plaintiff was a conductor on defendant's baggage car, there being also a motorman and a messenger. By reason of an alleged unusual lurching of the car as it passed through an open switch, plaintiff was thrown out of the door at the side of the car, colliding with a pole 15 inches from the car, and so thrown under the car and seriously injured. The negligence complained of is the running of the car at an excessive rate of speed, and not under control, and the nearness of the pole to the track.

[1] The only question is whether there was substantial evidence tending to show defendant negligent; for under both the Norris Act (101 Ohio Laws, 195; Gen. Code Ohio, 6245–1), which counsel seem to agree is applicable, as well as under the Ohio Railroad Act (99 Ohio Laws, p. 25), the negligence of a fellow employé is made that of the employer, and the rule of comparative negligence prevails, subject to limitations whose proper application by the court is not here challenged.

There was substantial evidence tending to show negligence of the motorman. The car regularly stopped at a booth on the switch track. It was necessary for the conductor to be at the rear of the car, to watch and guide the trolley and keep it in contact with the proper wire as the car passed through the switch. He testified that the usual speed of the car in crossing the switch was 5 to 6 miles an hour; that the air was usually applied by the motorman at a distance of 150 to 200 feet before reaching the switch, and that there was always time, after such application of air, for plaintiff to get to the rear platform and look after the trolley; that on the day in question the air was not applied until the car was practically at the switch, or, at the most, only 15 to 20 feet therefrom; and that the car was then running 15 miles an hour. The evidence in the case tended to show negligence in maintaining this speed at the time and place stated.

We are not impressed with the contention that plaintiff was not at his post when the car struck the switch, in that he was sitting near the door in the center of the car, eating his lunch. He was not required to be at all times on the rear platform; and, at the most, this was a question merely of contributory negligence. The latter consideration applies to the contention that plaintiff, as conductor, had the right to control the speed of the car.

[2] The alleged improbability of plaintiff's story was a question of fact for the jury. This court, on review of a denial of motion to direct verdict, cannot determine questions of credibility of witnesses, and must take that view of the evidence most favorable to the party against whom the direction is asked. Big Brushy Coal Co. v. Williams (C. C. A., 6th Cir.) 176 Fed. 529, 532, 99 C. C. A. 102; Erie R. R. Co. v. Weber (C. C. A., 6th Cir.) 207 Fed. 293, 296, 125 C. C. A. 37.

The authorities cited in support of the proposition that plaintiff had no right to have his head out of the door are not in point. Plain-

tiff's claim is that he was thrown out of the door, not that he voluntarily protruded his head or any part of his body therefrom.

There being evidence of negligence on the part of the motorman in the respect stated, it is unnecessary to consider whether the company was negligent with respect to the proximity of the pole.

The judgment should be affirmed, with costs.

(218 Fed. 167)

PEOPLE'S LIGHT CO. v. RATHBUN-JONES ENGINEERING CO.†

(Circuit Court of Appeals, Fifth Circuit. December 9, 1914.)

No. 2640.

SALES (§ 262½*)—IMPLIED WARRANTY OF QUALITY OR FITNESS—SALE OF SPECIFIC ARTICLE MADE AND WARRANTED BY ANOTHER.

A warranty cannot be implied from a sale by a manufacturer of machinery, in connection with machinery of its own make, of a known, described, and definite article made by another manufacturer, who does warrant it, though the purchaser makes known that it is required by him for a particular purpose or use.

[Ed. Note.—For other cases, see Sales, Cent. Dig. §§ 740–748; Dec. Dig. § 262½.*]

Appeal from the District Court of the United States for the Southern District of Texas; Waller T. Burns, Judge.

Suit in equity by the Rathbun-Jones Engineering Company against the People's Light Company. Decree for complainant, and defendant appeals. Affirmed.

John C. Scott, of Corpus Christi, Tex., and Frank H. Booth, of San Antonio, Tex., for appellant.

C. L. Bates and James D. Walthall, both of San Antonio, Tex., for appellee.

Before PARDEE and WALKER, Circuit Judges, and CALL, District Judge.

PER CURIAM. The decree appealed from is unquestionably correct, unless the defendant's demand by way of counterclaim or reconvention was established. The trial judge, in setting out his reasons for finding against that demand, stated two conclusions, among others: (1) That, under the evidence, the only substantial grounds of complaint by the defendant were due to defects in the gas producer; and (2) that the plaintiff was not liable for damages resulting from such defects, because it did not guarantee the gas producer or its sufficiency in any respect.

The first-mentioned conclusion is one of fact. Certainly it cannot be said that that conclusion was unwarranted by the evidence in the case. The evidence was such that plainly it furnished support for the conclusion that the main, if not the sole, trouble experienced by the defendant in the use of the machinery was due to the gas producer, and that whatever damages the defendant sustained were attributable to the

*For other cases see same topic & § NUMBER in Dec. & Am. Digs. 1907 to date, & Rep'r Indexes

† Rehearing denied January 5, 1915.

deficiency of that machine, and not to any fault in the engine sold by the plaintiff.

We think that the other conclusion, which was one of law—that there was no contract shown whereby the plaintiff guaranteed the gas producer or its sufficiency for any purpose—was a correct one. In the written proposition made by the plaintiff to the defendant, the acceptance of which by the latter made the contract between them, the only mention of a gas producer was in the enumeration among the articles to be furnished of "one No. 7 R. D. Wood & Co.'s lignite producer as per attached specifications"; but, accompanying and attached to that proposition was a written proposition by R. D. Wood & Co., addressed to the defendant, offering to furnish a gas producer. So far as that latter proposition guaranteed the machine offered by it, its acceptance made such guaranty the obligation, not of the plaintiff, but of R. D. Wood & Co. Nowhere in the contract to which the plaintiff was a party is there anything indicating an agreement or undertaking on its part to guarantee the sufficiency of the gas producer offered to be supplied by Wood & Co. If anybody is liable in damages by reason of such a guaranty, it is Wood & Co., and not the plaintiff. Though the defendant bought the gas producer from the plaintiff, there is nothing in the terms of the latter's written contract to show a warranty or guaranty by it of that machine, and a guaranty cannot be implied from a sale by it of a known, described, and definite article, made by another manufacturer, who does guarantee it, though the purchaser makes known that it is required by him for a particular purpose or use. Pullman Car Co. v. Metropolitan Railway, 157 U. S. 94, 15 Sup. Ct. 503, 39 L. Ed. 632; Seitz v. Brewers Refrigerating Co., 141 U. S. 510, 12 Sup. Ct. 46, 35 L. Ed. 837; Grand Avenue Hotel Co. v. Wharton, 79 Fed. 43, 24 C. C. A. 441. The only guaranty, if any, the breach of which caused substantial damage to the defendant, was that of R. D. Wood & Co. For that breach the plaintiff is not chargeable with liability.

We think that the ultimate conclusion of the trial judge was correct, and that the decree appealed from should be affirmed; and it is so ordered.

(219 Fed. 72)

MAGRUDER et al. v. BELLE FOURCHE VALLEY WATER USERS' ASS'N.

(Circuit Court of Appeals, Eighth Circuit. December 8, 1914.)

No. 4150.

(Syllabus by the Court.)

1. INJUNCTION (§ 114*)—PARTIES—RECLAMATION ACT.

A corporation with which, as the representative of its shareholders, who are parties accepted by the United States as holders of water rights in a project under Reclamation Act June 17, 1902, c. 1093, 32 Stat. 388 (Comp. St. 1913, §§ 4700–4708), the United States makes a contract for the benefit of such shareholders relative to the supply of water to and the dues to be paid by the shareholders, and which covenants in the contract to collect dues for the United States and guarantees the payment

*For other cases see same topic & § NUMBER in Dec. & Am. Digs. 1907 to date, & Rep'r Indexes

thereof, is a proper party plaintiff in a suit to enjoin officers of the United States from collecting unlawful charges from the shareholders, turning the water from their lands, and canceling their water rights and homestead rights because they fail to pay such charges.

[Ed. Note.—For other cases, see Injunction, Cent. Dig. §§ 202–220; Dec. Dig. § 114.*]

2. CONSTITUTIONAL LAW (§§ 67, 72*)—EXECUTIVE DEPARTMENT—DECISIONS—CONCLUSIVENESS ON COURTS.

The decisions of officers of an executive department of the United States of questions of law are not conclusive upon the courts. It is the function and duty of the officers of the judicial department to exercise their own judgments in the determination of questions whether or not acts of executive officers are authorized by law, even though such officers have already decided them. The questions whether or not the charges alleged to be illegal and the acts and threatened acts of executive officers depriving the shareholders of a water users' association of water and canceling their water rights and homestead rights for failure to pay such charges, are justified by law, are questions of law which a court of equity is empowered to determine in a suit of such an association against such executive officers, although the Secretary of the Interior or other executive officers have already decided them.†

3. UNITED STATES (§§ 125, 127*)—"SUIT AGAINST UNITED STATES"—INTERFERENCE WITH RIGHTS.

A suit against executive officers of the United States to enjoin them from committing acts unauthorized by or in violation of law, to the irreparable injury of the property rights of the plaintiff, is not a "suit against the United States," nor is it or the injunction sought objectionable, either on the ground that they interfere with the property or the possession of the property of the United States, or on the ground that they compel specific performance of its contracts.

[Ed. Note.—For other cases, see United States, Cent. Dig. §§ 113, 114, 116; Dec. Dig. §§ 125, 127.*]

4. EQUITY (§ 46*)—RIGHT TO REMEDY—REMEDY AT LAW.

The remedy at law which will preclude a suit in equity must be as prompt, efficient, and adequate as the remedy in equity.

[Ed. Note.—For other cases, see Equity, Cent. Dig. §§ 151, 152, 157, 159–163; Dec. Dig. § 46.*]

5. APPEAL AND ERROR (§ 954*)—INJUNCTION (§§ 135, 161*)—INTERLOCUTORY INJUNCTION—DISCRETION—APPEAL.

The granting or dissolution of an interlocutory injunction is intrusted to the discretion of the court of original jurisdiction, not to the discretion of the appellate court.

In the absence of a violation of the principles and rules of equity established for the guidance of the court of original jurisdiction, the action of that court in such interlocutory matters must be sustained, unless there is clear proof of an abuse of its discretion.

[Ed. Note.—For other cases, see Appeal and Error, Cent. Dig. §§ 3818–3821; Dec. Dig. § 954;* Injunction, Cent. Dig. §§ 304, 347; Dec. Dig. §§ 135, 161.*]

6. INJUNCTION (§ 136*) — INTERLOCUTORY INJUNCTION — GROUNDS — MAINTENANCE OF STATUS.

An interlocutory injunction to maintain the existing situation may properly issue, whenever the questions of law or fact to be ultimately determined in the suit are grave and difficult, and injury to the moving party will be immediate, certain, and great if it is denied, while the loss

*For other cases see same topic & § NUMBER in Dec. & Am. Digs. 1907 to date, & Rep'r Indexes

† See note at end of case.

or inconvenience to the opposing party will be comparatively small if it is granted, and may be indemnified by a proper bond.

[Ed. Note.—For other cases, see Injunction, Cent. Dig. §§ 305, 306; Dec. Dig. § 136.*]

Appeal from the District Court of the United States for the District of South Dakota; James D. Elliott, Judge.

Suit by the Belle Fourche Valley Water Users' Association against Frank C. Magruder and others. From an order refusing to set aside a restraining order and granting an interlocutory injunction, defendants appeal. Affirmed.

Ethelbert Ward, of Denver, Colo. (Robert P. Stewart, U. S. Atty., of Deadwood, S. D., and A. R. Honnold, of Denver, Colo., on the brief), for appellants.

Chambers Kellar, of Lead, S. D. (O. E. Farnham, of Newell, S. D., and James G. Stanley, of Lead, S. D., on the brief), for appellee.

Before SANBORN and SMITH, Circuit Judges, and TRIEBER, District Judge.

SANBORN, Circuit Judge. The appellant Frank C. Magruder is the manager of the Belle Fourche project and the appellant R. F. Walter was the project engineer and is the supervising engineer. They were defendants below, and the plaintiff was the Belle Fourche Valley Water Users' Association, a corporation organized under the laws of South Dakota to represent and act for the holders of water rights in the project, to collect the lawful dues from them, and to guarantee the payment of these dues. The Belle Fourche project is a project for the storage of water and the irrigation of land under the Reclamation Act of June 17, 1902, and the acts amendatory thereof. 32 Stat. p. 388, c. 1093. This is an appeal from an order refusing to set aside a restraining order and granting an interlocutory injunction against the defendants, forbidding them to exact from holders of water rights in the project charges alleged to be illegal, and from depriving them of the use of the water, of their rights to the water, and of their rights to their land because they failed to pay such charges.

The appellants assail the order on three grounds—that the association is not a proper party plaintiff, that the court below had no power to grant any relief upon the facts stated in the complaint, and that on the evidence the order was erroneous. Counsel for the appellants argue that the association was not a proper party plaintiff, because it had no interest in the suit, and was not one of a numerous class having a common interest in the subject of the suit, within the meaning of rule 38 in equity (198 Fed. xxix, 115 C. C. A. xxix). But rule 37 in equity (198 Fed. xxviii, 115 C. C. A. xxviii) provides that a party with whom and in whose name a contract has been made for the benefit of another may sue in his own name without joining that other. On October 25, 1905, the United States made a contract with this association, for the benefit of those who held or should there-

*For other cases see same topic & § NUMBER in Dec. & Am. Digs. 1907 to date, & Rep'r Indexes

after hold water rights under the Belle Fourche project, to the effect, among other things, that only those who were or should become shareholders of the association should be accepted as entrymen of homesteads on the public domain included within the project, or as applicants for rights to the use of water provided for irrigation thereunder, that the payment for water rights to be issued to the shareholders of the association should be divided into not less than 10 equal payments, the first whereof should be payable at the time of the completion of the proposed works, or within a reasonable time thereafter, that the cost thereof should be apportioned equally per acre among those acquiring such rights, that the association would collect and pay to the United States, and did guarantee the payment, of that part of the costs of the works that should be apportioned to each of its shareholders and that parties otherwise eligible might, on the designation of the Secretary of the Interior, become members of the association. In the rules and regulations promulgated by the Secretary through the Director of the United States Reclamation Service we read:

"The execution of the contract between the water users' association and the Secretary of the Interior may be regarded as the completion of the organization of the water users' association. * * * The execution of this contract formally fixes the relation of the association to the government as the representative of the water users and as a medium of communication between the water users and the government."

It is to prevent the violation of the law applicable to the construction and execution of the foregoing contract, and the alleged irreparable injury to the shareholders of the plaintiff and to the plaintiff that may result from such violation, that this suit was instituted. The contract was made in the name of the corporation for the benefit of its shareholders, who number about 600, and the association was clearly the proper party plaintiff under rule 37 in equity, and also because, as contractor to collect and as guarantor of the payment of the lawful charges against its shareholders for the cost of the works and the use of the water, and as the holder of the first lien upon the property of these shareholders under Laws S. D. 1909, p. 155, upon their water rights respectively for the repayment of their deferred payments which it should pay, it had a vital interest in preventing the levy or collection of unlawful charges against them, or their deprivation of their water rights or their property because they failed to pay such charges.

Did the amended complaint state facts sufficient to invoke the jurisdiction and power of a court of equity to grant relief? In the discussion of this question the allegations of the complaint must be taken to be true. Material averments of the complaint were that these were the facts:

The shareholders of the plaintiff had applied for water and had been accepted as water users under the Reclamation Act, the contract of October 25, 1905, and written applications in accordance with its terms. They were either the owners of lands whose title had been vested in them, or homesteaders upon public lands irrigable under the project, and the owners of water rights for use upon such lands.

The project was conceived prior to 1905, and since that time the government has been constructing, but has never completed, the works. The contract of 1905 provided that the payments for the water rights to be issued to the shareholders should be divided into not less than 10 equal payments, the first of which should be payable at the time of the completion of the works or within a reasonable time thereafter. Before these works were completed, and for each of the years 1908, 1909, and 1910, the defendants demanded of the shareholders the payment of an installment of $3 per acre of their alleged irrigable land on account of the construction of the works, and the payment of 40 cents per acre of such land on account of the operation and maintenance of the works, and before the works were completed, for each of the years 1910 and 1911, they demanded the payment of $3 per acre of their irrigable land for construction, and 60 cents per acre of such land for operation and maintenance. The lands of the shareholders on account of which these payments were demanded amounted to about 12,000 acres for the year 1908, about 12,000 acres for the year 1909, about 35,000 acres for the year 1910, and about 47,000 acres thereafter. Notwithstanding the demand of these charges, water sufficient to irrigate these lands was not furnished in 1908, 1909, 1910, or 1911. The shareholders occupied these lands, prepared them for crops, and seeded them; but the crops generally failed from lack of water, and the shareholders generally lost much of their labor and expense. The defendants demanded of the shareholders 60 cents per acre of their irrigable land for operation and maintenance for the year 1913. This charge was made up in part of charges for services and other expenses not incurred or made in connection with the Belle Fourche project. Many thousands of dollars had been charged against the shareholders on account of the salaries of a large and expensive administration force annually as a part of these operation and maintenance charges.

The defendants were attempting to collect of the shareholders, as a part of these operation and maintenance charges, about $78,000 as betterments, which were and are in reality a part of the expense of construction, and are included within the $3 per annum per acre for the 10 years, amounting to $30 per acre, to which amount many of the shareholders by their accepted applications limited their liability for the construction of the works. During these years many of the shareholders paid some of the foregoing charges, although they deemed them illegal, because only by such payments could they get water from the project, and they paid each year to get sufficient water to enable them to raise crops. But in the year 1913 many of them had become financially exhausted by repeatedly preparing their land for crops which failed for lack of water, and by their payment to the United States of some of the charges which have been described, and yet many of the charges remained unpaid. Thereupon, after they had prepared their lands for the crop of 1913, and after the water had been turned onto the lands and the crops were growing, the defendants threatened and were about to turn the water from the lands of these shareholders unless they paid the operation and maintenance

charges for 1913, and the defendants further threatened and were about to recommend for cancellation and to cause the cancellation of the homestead entries and the water rights of the shareholders who had not paid all the charges against them, because they had failed to do so. The turning of the water from the lands would have ruined the crops of 1913. The cancellation of the homestead entries and the water rights of the shareholders would have driven them, with their few domestic animals, away from their homes. The relief sought was an injunction against the turning of the water from the lands, against collection of the charges for construction before the completion of the works, against the collection, as operation and maintenance charges, of expenses for betterments, against the collection of operation and maintenance charges for the year 1913, and against the cancellation of the homestead entries and water rights of the shareholders because these various charges have not been paid.

[1] Counsel for the appellants argue that this suit should be dismissed, and the injunction should be dissolved, because the facts which have been recited present no cause of action for any relief in equity. Let us see. The complaint is that the defendants without authority of and in violation of law demand of the holders of water rights charges for construction that are not due, charges for operation and maintenance composed in part of items for betterments and in part of items for expenses not made in connection with the Belle Fourche project for which they are not legally liable, and that the defendants are about to deprive the shareholders of the use of the water and of their water rights and homestead rights because they do not pay these charges. There can be no doubt that these acts and threatened acts of the defendants are and will be, not only unauthorized by, but contrary to, law. But counsel contend, nevertheless, that these facts give a court of equity no jurisdiction to grant any relief to the shareholders or the plaintiff, because the Secretary of the Interior had and exercised the discretion to determine that all these charges and acts were lawful. But the rights to the homesteads and to the water rights of the shareholders were substantial, valuable, and, against all but the Congress of the United States, vested rights. Counsel cite authorities to the effect that the United States may withdraw lands subject to homestead and pre-emption at any time before patent. But that power, whatever its extent, is vested in the Congress of the United States alone, not in the executive officers of the United States. The former may under some circumstances make laws to withdraw such lands from pre-emption or homestead although pre-emption or homestead rights have been initiated. But the officers of the executive department of the government may not. They are subject, not superior, to existing laws, and they may not lawfully destroy or unjustly affect the water rights or homestead rights, or other valuable rights of this nature, in violation or disregard of the laws of the land. Hemmer v. United States, 204 Fed. 898, 904, 123 C. C. A. 194, and cases cited.

[2] It is a question of law whether the proposed destruction of the homestead rights and water rights of the shareholders, and the re-

fusal to permit them to use the waters of the project because they do not pay the charges alleged to be illegal is or is not authorized by law. And a decision of a question of law by the officers of the executive department is never conclusive upon the courts. Wisconsin Central R. R. Co. v. Forsythe, 159 U. S. 46, 61, 15 Sup. Ct. 1020, 40 L. Ed. 71; United States v. Grand Rapids & I. R. Co. (C. C.) 154 Fed. 131, 136; Northern Pacific R. Co. v. Sanders (C. C.) 47 Fed. 604, 609–612.

It is the function and duty of the officers of the judicial department of the United States, a function and duty which they may not renounce, to exercise their own independent judgments in the determination of the questions whether or not acts of executive officers are authorized by law, even though such officers have already decided the questions. Deming v. McClaughry, 113 Fed. 639, 640, 641, 51 C. C. A. 349, 350, 351; Hartman v. Warren, 76 Fed. 157, 162, 22 C. C. A. 30, 36; Webster v. Luther, 163 U. S. 331, 342, 16 Sup. Ct. 963, 41 L. Ed. 179; United States v. Tanner, 147 U. S. 661, 663, 13 Sup. Ct. 436, 37 L. Ed. 321; Merritt v. Cameron, 137 U. S. 542, 11 Sup. Ct. 174, 34 L. Ed. 772; United States v. Graham, 110 U. S. 219, 3 Sup. Ct. 582, 28 L. Ed. 126; Swift Co. v. United States, 105 U. S. 691, 26 L. Ed. 1108. The facts stated in the amended complaint were ample to invoke the jurisdiction of the court below to determine the question whether or not the defendants were authorized by law to collect the charges it was alleged they demanded, and whether or not they were authorized by law to destroy the water rights and homestead rights for the failure of their owners to pay these charges.

[3] Another objection to the complaint is that it evidences a cause of action against the United States. This contention is presented in numerous forms, such as that the defendants are the officers of the United States and their acts are the acts of the United States, that an injunction against their acts would constitute an interference with the use and possession of the property of the United States, the water of its reservoir, and would compel specific performance of its contracts. If the acts of the defendants done and threatened were authorized by law, they might be the acts of the United States against which a court of equity would grant no relief. But if the averments of the complaint are true, and in deciding the question now under consideration they must be assumed to be so, these acts are unauthorized by and contrary to law. They are, therefore, not the acts of the United States, and a suit to enjoin their performance is not a suit against the United States, or a suit to interfere with its property, or a suit to compel specific performance of its contracts. It is a suit to enjoin officers of the United States from unlawfully interfering with and diverting its water from those persons lawfully receiving and entitled to receive it, from unlawfully preventing the United States from discharging its duties and performing its contracts, to the irreparable injury of the plaintiff and its shareholders. That an executive officer is committing or about to commit acts unauthorized by or in violation of law, to the irreparable injury of the property rights of the plaintiff, is a good cause of action against such officer for injunctive relief.

A suit against him for such a cause is neither a suit against the United States nor is it, or the injunction against such acts of the officer, objectionable either on the ground that it interferes with the property of the United States, or its possession, or compels the specific performance of its contracts by the latter. American School of Magnetic Healing v. McAnnulty, 187 U. S. 94, 110, 111, 23 Sup. Ct. 33, 47 L. Ed. 90; Philadelphia Co. v. Stimson, 223 U. S. 605, 619, 620, 32 Sup. Ct. 340, 56 L. Ed. 570; Garfield v. Goldsby, 211 U. S. 249, 261, 29 Sup. Ct. 62, 53 L. Ed. 168; Pennoyer v. McConnaughy, 140 U. S. 10, 12, 17, 11 Sup. Ct. 699, 35 L. Ed. 363; Baker v. Swigart (D. C.) 196 Fed. 569, 571; Id., 199 Fed. 865, 866, 118 C. C. A. 313; Swigart v. Baker, 229 U. S. 187, 192, 33 Sup. Ct. 645, 57 L. Ed. 1143; United States v. Cantrall (C. C.) 176 Fed. 949, 954.

[4] The only other objections to the complaint are that it fails to show that the plaintiff or its shareholders will suffer irreparable injury from the unauthorized and illegal acts of the defendants, and that it does disclose the fact that they have an adequate remedy at law. The remedy at law which counsel assert the plaintiff and its shareholders have consists of actions at law against the United States for the damages they have sustained by their deprivation of water and by the cancellation of the water rights and homestead rights of the shareholders because they failed to pay the illegal charges. But the remedy at law which precludes relief in equity must be as prompt, efficient, and adequate as the remedy in equity. To determine the amounts of the unauthorized charges for operation and maintenance may and probably will require the examination of the accounts of the receipts and disbursements on account of the entire project. To determine the amounts, if any, owing by the shareholders, may and probably will require the examination of the accounts between each of the complaining shareholders and the project. The consideration and settlement of issues dependent upon the taking of accounts composed of many items is one of the great heads of equity jurisprudence, and the probable necessity for such an accounting is in itself sufficient to sustain the jurisdiction of this suit by a court of chancery. Castle Creek Water Co. v. City of Aspen, 146 Fed. 8, 13, 14, 76 C. C. A. 516, 521, 522, 8 Ann. Cas. 660. Nor is the remedy of an action, or several actions, at law for damages that will be sustained by the infliction of the wrongs alleged on account of the collection of the unlawful charges, or the destruction of the homestead rights and water rights for a failure to pay them, as prompt, or as efficient, or as adequate, as the prevention by this suit in equity of the collection of the unjust charges and the enforcement of the illegal forfeitures, and the adjudication in this single suit of the legal rights and duties of all the parties and all the shareholders by a court of equity, which, with its power to apply to the questions at issue the learning and experience of its chancellor and of a trained accountant as a master, is so much better equipped than a jury to find and render a just decree upon such issues. The plaintiff and the shareholders have no adequate remedy at law for the wrongs charged in this complaint.

Do the averments of the complaint set forth facts which show an imminent danger of irreparable injury to the plaintiff and its shareholders from the acts of the defendants? Those averments disclose these facts: The shareholders of the plaintiff are farmers, each with a small number of domestic animals, with modest homes and limited means, trying to cultivate arid lands which they have been induced to occupy by the representations of the defendants that they would be supplied with water from the project to raise crops upon these lands. The United States made a contract with the plaintiff and with many of these shareholders, with all of them who applied for water rights before 1911, that water would be supplied to them in consideration of their agreements to pay for the construction of the works after their completion, and to pay their just share of necessary operation and maintenance charges. The defendants have demanded and collected construction charges not due, operation and maintenance charges unnecessary and unauthorized, and have failed to furnish the requisite water to enable these farmers to raise crops for several years, until some of them are financially exhausted and cannot pay many of the charges, and for their failure so to do the defendants threaten to deprive them of the use of the water and to take steps to destroy their water rights and their homestead rights. The plaintiff, the association, has guaranteed the payment of the legal charges against its shareholders, and has a lien on their rights for such charges that it pays, and it depends upon assessments upon its shareholders to maintain itself and to discharge its duties. The injury to these farmers by their threatened loss of their rights to the water and the land, by turning them and their families with a few domestic animals from their homes and their hopes of a comfortable living therein, may not be measured by the few dollars in damages they might recover after the delay and expense of trials by jury to recover the salable value of their rights to the land and the water which have been depreciated and are being constantly depreciated in value by the alleged acts of the defendants, nor could the damage to the association be fairly measured or recovered by such actions at law. The irreparable injury to the plaintiff and the shareholders by the acts of the defendants is fairly shown by the allegations in the amended complaint, and that complaint presents facts sufficient to state a good cause of action and to invoke the established power of a court of chancery to grant equitable relief. The suit may not be lawfully dismissed on account of the insufficiency of the complaint.

In the consideration of the questions thus far discussed the presumption has necessarily been indulged that the averments of facts in the amended complaint are true. But counsel for the defendants contend that they are not true, and that the evidence before the court below at the time the injunction was granted established this fact so clearly that the court below ought to have dissolved the restraining order and to have denied the injunction. The restraining order was made by the state court on July 19, 1913. On August 6, 1913, after the removal of the case to the court below, the defendants gave notice of a motion to dismiss the suit and to dissolve the order,

which was heard on August 28, 1913, and resulted in an order that the plaintiff might file an amended complaint and the defendants might renew their motion. On October 8, 1913, the amended complaint was filed. Thereupon the defendants renewed their motion, and the plaintiff made a motion for an additional restraining order. These motions were heard on the complaint, the affidavits presented by the respective parties, and the arguments of counsel for three days, commencing about November 30, 1913, and then the court granted the order for the injunction which is challenged by this appeal. The complaint was verified on information and belief by the secretary of the association and by 124 of its shareholders. It was supported by 37 other affidavits. In opposition to this evidence the defendants produced the affidavits of the defendants Magruder and Walter. About 40 exhibits, consisting of the contracts between the United States and the plaintiff, the articles of incorporation of the plaintiff, the forms of the applications used by the shareholders, the circulars and notices respecting the project issued by the Secretary of the Interior and his subordinates, were also introduced in evidence. When the case was heard below the defendants had not answered the complaint, so that as a pleading its allegations stood admitted. The defendants Magruder and Walter, however, in their affidavits denied all the averments of material facts in the complaint which tended to show illegal charges, demands, or threats by them, or any of the defendants, except the allegations of the demand for the payment of construction charges prior to the completion of the project from those who applied for water rights prior to January 24, 1911. They asserted in their affidavits that these shareholders had, by a contract they made through the association with the United States on that date and by their subsequent action, estopped themselves from relying on the contract of October 25, 1905, and their applications regarding this matter. The defendants Magruder and Walter testified that no illegal or excessive charges for operation and maintenance had ever been demanded, either on account of expenses not necessary or relevant to the operation of the Belle Fourche project, or on account of betterments. They denied threats of cancellation of water or homestead rights on account of failure to pay such charges.

In addition to the averments of the amended complaint, the plaintiff produced the affidavit of its secretary that the defendant Magruder had been violating the restraining order by giving notices to shareholders, dated October 25, 1913, that they would suffer the penalty of 1 cent per acre per month for the unpaid operation and maintenance charge for one year after July 21, 1913, of 2 cents per acre per month for two years of such unpaid charges, 3 cents per acre per month for three years of such unpaid charges, and so on; that in compliance with a request for an itemized statement of the expenditures to be charged against the project the defendants furnished one in December, 1911, or January, 1912, which contained an item of $78,000 for betterments; and that the plaintiff had been furnished with statements of expenses incurred in detached offices not

connected with the project. The plaintiff insisted that the provision of the contract of January 24, 1911, between the plaintiff and the United States, which provided for a modification of the stipulation of the contract of October 25, 1905, to the effect that the charges for construction should fall due after the completion of the contract, upon which provision the defendants relied in part for the estoppel they claimed, was unauthorized by the shareholders, and produced a copy of the resolution of the shareholders on which the contract of January 24, 1911, was founded, which seems to give no such authority.

[5] From this brief statement of the course of this suit and of the evidence before the court below, it appears that the order for the injunction was not made hastily, but after elaborate argument and deliberate consideration, that there had been no answer made to the complaint, that there were many issues of fact involved, and their decision was conditioned by conflicting testimony. The discussion which appears in the earlier part of this opinion and the legal questions suggested by the evidence leave no doubt that the questions of law to be ultimately determined in this suit are grave and difficult, and the situation of the parties disclosed by the complaint and the affidavits was such that it might well have appeared to the court below that the injury of the plaintiff and its shareholders would be certain, great, and irreparable if the injunction should not be issued, while the inconvenience and loss to the defendants would be inconsiderable if the injunction was granted. Now the question in this court is not whether or not it would have issued or would issue the injunction upon the evidence before it. The granting or dissolution of an interlocutory injunction rests in the sound judicial discretion of the court of original jurisdiction, and when that court has not departed from the rules and principles of equity established for its guidance, its orders in this regard may not be reversed by the appellate court without clear proof that it abused its discretion. It is to the discretion of the trial court, not to that of the appellate court, that the law has intrusted the power to grant or dissolve such an injunction, and the question here is: Does the proof clearly establish an abuse of that discretion by the court below? American Grain Separator Co. v. Twin City Separator Co., 202 Fed. 202, 206, 120 C. C. A. 644, 648, and cases there cited.

[6] The controlling reason for the existence of the right to issue an interlocutory injunction is that the court may thereby prevent such a change of the conditions and relations of persons and property during the litigation as may result in irremediable injury to some of the parties before these claims can be investigated and adjudicated. A preliminary injunction maintaining the existing situation may properly issue whenever the questions of law and fact to be ultimately determined in the suit are grave and difficult, and injury to the moving party will be certain, great, and irreparable if the motion is denied, while the loss and inconvenience to the opposing party will be inconsiderable, and may well be indemnified by a proper bond, if the injunction is issued. City of Newton v. Levis, 79 Fed. 715, 718, 25 C. C. A. 161, 164; Love v. Atchison, T. & S. F. Ry. Co., 185 Fed.

321, 332, 107 C. C. A. 403, 414; King Lumber Co. v. Benton, 186 Fed. 458, 459, 108 C. C. A. 436, 437; Carpenter v. Knollwood Cemetery (C. C.) 188 Fed. 856, 857; Henry Gas Co. v. United States, 191 Fed. 132, 136, 111 C. C. A. 612, 616.

A careful reading and thoughtful consideration of the amended complaint, of each of the affidavits and exhibits, in the light of these established principles of equity, have convinced that there is no such proof in this case of an abuse of discretion by the court below by its issue of the injunction as would warrant a reversal of its order.

The order from which the appeal was taken must accordingly be affirmed; and it is so ordered.

NOTE.

Encroachment by Judiciary on Executive or Executive Departments.

I. In General.

(U. S.) In all matters of discretion, and in regard to the forms of proceeding, executive acts cannot, in any form, be revised or corrected by the judicial department.—Astrom v. Hammond, Fed. Cas. No. 596 (3 McLean, 107).

(U. S.) The assertion of a plaintiff that he is the owner of a tract of land, which the land officers of the government treat as public land, does not take the case out of the rule that the judiciary cannot interfere with the duties of the executive officers of the government, unless those duties are of a character purely ministerial, involving no exercise of judgment or discretion, and where it is the duty of these officers to determine, upon all the facts, whether the land is open to pre-emption or sale.—Litchfield v. Register, 76 U. S. (9 Wall.) 575, 19 L. Ed. 681.

(U. S.) The national courts cannot rightfully interfere with executive action in any case where an executive officer is authorized to exercise judgment or discretion in the performance of an official act.—Taylor v. Kercheval, 82 Fed. 497.

(U. S.) The courts cannot properly interfere with executive action, either by mandamus or injunction, in a matter in which the executive officer is authorized to exercise his judgment or discretion.—Dudley v. James, 83 Fed. 345.

(U. S.) Relief from hardships of authorized government regulations should be sought from the executive department, which, under expressly delegated authority, established such regulations, rather than from the courts.—United States v. American Express Co., 177 Fed. 735.

(Ark.) The Governor of a state is not amenable to the judiciary for the manner in which he performs, or for his failure to perform, his legal or constitutional duties.—Hawkins v. Governor, 1 Ark. (1 Pike) 570, 33 Am. Dec. 346.

(Cal.) Where the state confers on a board of public officers jurisdiction to exercise their discretion on matters within their power, the courts cannot review the question whether the discretion was properly exercised, especially in the absence of fraud or bad faith on the part of the body to whom the power is confined.—De Merritt v. Weldon, 98 Pac. 537.

(Colo.) The division of the state government into executive, legislative, and judicial departments, distinct from each other and independent of each other, does not make their respective powers absolute, but they incidentally are affected by the action of other departments.—Greenwood Cemetery Land Co. v. Routh, 17 Colo. 156, 28 Pac. 1125, 31 Am. St. Rep. 284.

(Conn.) That a judicial proceeding was instituted for the purpose of having purely administrative questions determined does not justify its dismissal, if a judicial question is also presented.—Woodmont Ass'n v. Town of Milford, 84 Atl. 307, 85 Conn. 517.

(Fla.) The exercise of some authority, discretion, or judgment may be incident or necessary to the performance of administrative or ministerial du-

ties; but such authority, discretion, or judgment is subject to judicial review. —State v. Atlantic Coast Line R. Co., 47 South. 969, 56 Fla. 617.

(Fla.) Action by an administrative officer or board must not only be in accordance with organic law, but it must conform to applicable valid statutes, and must be reasonable in its operation, and such an action is subject to judicial review as to matters that are not concluded by the exercise of administrative discretion and action.—State v. Louisville & N. R. Co., 57 South. 175.

(Idaho) Under the Constitution (article 2, § 1), recognizing the independence of the "three distinct departments of government," the judicial department cannot prohibit the executive department from acting within the recognized scope of that branch of the government.—Stein v. Morrison, 75 Pac. 246, 9 Idaho, 426.

(Ill.) The court has no power to compel the Governor to perform any duty which the Constitution or the law may impose upon him, no matter how palpable such duty may be.—People v. Bissell, 19 Ill. (9 Peck) 229, 68 Am. Dec. 591, followed in Same v. Yates (1865) 40 Ill. 127.

(Ill.) Acts of officers charged with discretionary duties in the exercise thereof can be reviewed by the courts only for fraud, accident, or mistake.—State v. Illinois Cent. R. Co., 92 N. E. 814, 246 Ill. 188.

(Ill.) Where the Constitution or the legislative branch of the government has delegated to an executive or administrative branch a duty which involves as an incident to its performance the exercise of judgment or discretion, as distinguished from judicial power, in determining the suitability or fitness of certain matters or things, such exercise is not subject to review by the judicial branch.—Valley v. Illinois Tunnel Co., 178 Ill. App. 388.

(La.) Since courts have no power to promulgate laws, they cannot by their process compel others to perform their official duty of promulgating laws enacted by the Legislature.—State v. Deslonde, 27 La. Ann. 71.

(La.) To divide the executive powers into ministerial and political, and for the courts to assume the right to enforce performance of the former, would enable the courts to compel the performance of a ministerial duty which the best policy of the state would warrant the Governor in disregarding; and hence, where the executive branch of the government is intrusted with discretionary powers, or when political powers are devolved upon it, it is not amenable to judicial process controlling the exercise of those powers.—State v. Board of Liquidation, 42 La. Ann. 647, 7 South. 706, 8 South. 577.

(Mich.) The action of the head of an executive department of the state is not judicial, and is not, therefore, subject to any direct proceedings for review by any court.—Ambler v. Auditor General, 38 Mich. 746.

(Mich.) The Supreme Court will not interfere with the discretion of the Governor, nor subordinate him to its process; nor will it review the exercise of political and executory functions when they are not ministerial, and would require the court to act outside of judicial authority.—People v. Board of State Auditors, 4 N. W. 274, 42 Mich. 422.

(Minn.) The exemption of executive officers of the state government from coercion by the courts in the performance of official duties is not a personal privilege, but results from Const. art. 3, dividing the powers of the government into distinct departments, and providing that no person belonging to one of them "shall exercise any of the powers properly belonging to either of the others," except as expressly provided; and therefore such exemption cannot be waived.—State v. Dike, 20 Minn. 363 (Gil. 314).

(Minn.) The rule prohibiting courts from controlling the official conduct of executive officers of the state applies to the state auditor while acting under Gen. St. 1878, c. 38, §§ 1, 2, as commissioner of the land office.—State v. Whitcomb, 28 Minn. 56, 8 N. W. 902.

(Minn.) The legal propriety and effect of the action of officers of the executive department of the state may be determined by the courts when the same are brought in question in causes requiring judicial action.—State v. Fidelity & Casualty Ins. Co., 39 Minn. 538, 41 N. W. 108.

(Minn.) The courts cannot, by injunction, mandamus, or other process, control the head of the executive department of the state in the discharge of

any executive duty involving the exercise of discretion; but where duties purely ministerial in character are conferred upon such officer, and he refuses to act, or assumes to act in violation of the Constitution and laws of the state, he may be compelled to act or restrained from acting by the courts at the suit of one who is injured in his person or property.—Cooke v. Iverson, 122 N. W. 251.

(Neb.) The Supreme Court cannot attempt, prior to an actual controversy arising, to direct the officers charged with the enforcement of a law as to their duty in putting it in operation.—State v. Fleming, 97 N. W. 1063, 70 Neb. 523, 529.

(Nev.) The courts cannot compel the Governor to perform acts which would be in conflict with the powers and prerogatives conferred upon him by the Constitution.—State v. Dickerson, 113 Pac. 105.

(N. Y.) The courts, as a general rule, will not interfere with the exercise of the discretion vested by statute in administrative officials, in the absence of convincing proof of improper conduct on their part, or unless the powers conferred on them have been clearly transgressed.—Holly v. City of New York, 112 N. Y. Supp. 797, 128 App. Div. 499.

(Okl.) District courts have no jurisdiction to control the action of the Governor even in ministerial acts.—State v. Huston, 113 Pac. 190, 27 Okl. 606.

(Okl.) The courts cannot substitute their discretion for that of the Governor or acting Governor, or nullify any of his official acts, where it does not appear that he has usurped power or violated the law.—Ex parte Hawkins, 136 Pac. 991.

(Tex.) A statute giving to the courts the right of interfering with the powers of the executive officers in managing the fiscal affairs of the state in their executive capacity is unconstitutional.—Houston, T. & B. R. Co. v. Randolph, 24 Tex. 317.

(Tex.) When the Constitution confers power upon one department of the government, it must be exercised in the manner pointed out, to the exclusion of all other means or manner of exercising it.—Snodgrass v. State, 150 S. W. 178.

(Wis.) The courts cannot interfere with the exercise of discretion committed to state and municipal administrative officers.—State v. Rose, 122 N. W. 751, 140 Wis. 360.

II. Interference with Particular Executive Acts.

1. In General.

(U. S.) Though a subpœna duces tecum may issue to the President of the United States to obtain the production of a letter for use in evidence on a trial for treason, the President may, in his discretion, withhold the letter, or any part thereof, but cannot delegate his privilege to the prosecuting attorney. —United States v. Burr, Fed. Cas. No. 14,694.

(U. S.) Where a claim for fees as marshal is presented to the department for allowance, and the department, in the exercise of its discretion, suspends action upon them until proper vouchers are furnished, or other reasonable requirements are complied with, the courts should not assume jurisdiction until final action is taken or is deferred for an unreasonable time.—United States v. Fletcher, 147 U. S. 664, 13 Sup. Ct. 434, 37 L. Ed. 322, following City of New Orleans v. Paine, 147 U. S. 261, 13 Sup. Ct. 303, 37 L. Ed. 162.

(U. S.) The enforcement of the continuance by a Hawaiian street railway company of a 10-minute schedule on certain of its lines, upon the ground that the public convenience demands such a schedule, is not within the limits of the judicial power, and is totally inconsistent with the power to regulate the management of the street railway in this respect, which is ultimately vested by Rev. Laws Hawaii § 843 (Sess. Laws 1905, Act No. 78), in the executive authorities.—Honolulu Rapid Transit & Land Co. v. Territory of Hawaii, 29 Sup. Ct. 55, 211 U. S. 282, 53 L. Ed. 186.

(U. S.) The bounds of judicial authority are not transcended by the appointment by a court of a water commissioner charged with the duty of distributing the waters of a river among the various irrigation canals according

to the adjudged priorities, and imposing upon the parties a pro rata liability for his salary.—Montezuma Canal Co. v. Smithville Canal Co., 31 Sup. Ct. 67, 218 U. S. 371, 54 L. Ed. 1074, reversing decree 89 Pac. 512, 11 Ariz. 99.

(U. S.) The courts cannot, under the guise of exerting judicial power, usurp merely administrative functions by setting aside an order of the Interstate Commerce Commission within the scope of the power delegated to such commission, upon the ground that such power was unwisely or inexpediently exercised. Decree, Chicago & A. R. Co. v. Interstate Commerce Commission (C. C.) 173 Fed. 930, reversed.—Interstate Commerce Commission v. Illinois Cent. R. Co., 30 Sup. Ct. 155, 215 U. S. 452, 54 L. Ed. 280; Same v. Chicago & A. R. Co., 30 Sup. Ct. 163, 215 U. S. 479, 54 L. Ed. 291.

(U. S.) Congress having declared that certain kinds of printed matter shall be nonmailable, and that the mails shall not be used to accomplish fraudulent schemes, whether certain mail matter belongs to the prohibited class, or whether a person is in fact making a fraudulent use of the mails, is within the jurisdiction of the executive branch of the government, the determination of which is not reviewable by the courts if sustained by any credible evidence. —Missouri Drug Co. v. Wyman, 129 Fed. 623.

(U. S.) The validity of the title of the United States to land purchased and occupied by it as a military fort, and the identification and definite boundaries of the land, are matters within the scope of the powers and duties of the executive department of the government to determine, and not subject to judicial scrutiny on the trial of a criminal case.—United States v. Holt, 168 Fed. 141.

(U. S.) The decision of the Postmaster General to discontinue a mail transportation service cannot be reviewed by the courts.—Miller v. United States, 47 Ct. Cl. 146.

(Cal.) The proceedings authorized by Act March 17, 1897 (St. 1897, p. 138, c. 110), providing for the registration of land titles through proceedings in the superior court, whereby the official certificate will always show the state of title, are judicial, and not administrative, and hence do not infringe the constitutional provision for the division of governmental functions.—Robinson v. Kerrigan, 90 Pac. 129.

(Colo.) Const. art. 4, § 5, provides that the Governor shall be the commander in chief of the military forces of the state, except when they are called into actual service of the United States, and that he shall be empowered to call out the militia to suppress insurrections. Section 2 vests in him the supreme executive power of the state, and Laws 1897, p. 204, c. 63, § 2, declares that when an insurrection in the state exists or is threatened, the Governor shall order out the National Guard to suppress it. *Held*, that the Governor having declared that a state of insurrection existed in a county, and having ordered out the militia to suppress it, his determination of the existence of such insurrection was not subject to review by the courts.—In re Moyer, 85 Pac. 190, 35 Colo. 159, 117 Am. St. Rep. 189.

(D. C.) Although there might be some such question made as to the strict correctness of the construction placed by the Secretary of War upon Act Cong. Feb. 2, 1901, c. 192, 31 Stat. 748 (U. S. Comp. St. 1901, p. 784), providing for the reorganization and increase of the army, yet the court cannot properly be asked to solve the doubt, and control and reverse the action of the Secretary, as against the construction that has been adopted and acted upon in the administration of the affairs of his department, and by which the rights of others may be affected.—United States v. Root, 22 App. D. C. 419.

(Ga.) The issuance of executions by the comptroller general, to collect the public revenue due to the state, is the act of the executive department of the government; and the courts have no power to prescribe the kind or sufficiency of the evidence which shall be necessary to authorize the process of execution to issue against defaulting officers or agents, or to restrain that department in pursuing this course.—Scofield v. Perkerson, 46 Ga. 350.

(Ga.) The courts cannot suspend the operation of a contract in the making

of which the Governor participated, in the exercise of his discretionary powers.—Peeples v. Byrd, 25 S. E. 677, 98 Ga. 688.

(Ga.) The action of the Governor in suspending a railroad commissioner as expressly allowed by Act Oct. 14, 1879 (Laws 1878–79, p. 125), being entirely discretionary, is not subject to review by the courts.—Gray v. McLendon, 67 S. E. 859.

(Idaho) The motives which prompt the chief executive of a state to issue warrant for the rendition of a prisoner are not the proper subjects of judicial inquiry.—Ex parte Moyer, 85 Pac. 897, 12 Idaho, 250, 118 Am. St. Rep. 214; Ex parte Pettibone, 85 Pac. 902, 12 Idaho, 246; Ex parte Haywood, Id.

(Idaho) The question as to whether it is expedient for the state board of land commissioners to sell lands in fee while there is an outstanding lease thereon, and the land cannot be occupied by the purchaser for a number of years after the sale, is addressed solely to the judgment of the land board vested in them by the Constitution and statutes, and cannot be controlled by the courts.—Pike v. State Board of Land Com'rs, 113 Pac. 447; State v. Hoover, Id. 455.

(Ill.) The requirement of Quo Warranto Act, § 1, that the Attorney General and state's attorney must obtain leave before filing an information in the nature of a quo warranto, though public rights only are involved, is not an infringement on the power of the executive department; the judiciary not being granted any power to coerce that department.—People v. Union Consol. Elevated Ry. Co., 105 N. E. 12, 263 Ill. 32.

(Ind.) Though a township board of finance is not a judicial body when acting on a bond given by a bank desiring to become a public depository under Burns' Ann. St. 1908, §§ 7522–7546, sections 7534 and 7537, granting an appeal from an action of the board to the circuit or superior court, are not unconstitutional. Rehearing, 88 N. E. 673, denied.—Board of Finance of Clark Tp. v. State, 89 N. E. 367.

(Kan.) Though the police judge of a city of the second class exercises judicial functions, he is not a repository of judicial power within Const. art. 3, § 1, vesting the judicial power in certain courts, where the Legislature can require him to notify the county attorney of violations of the prohibitory liquor law which comes to his knowledge, and to furnish the county attorney the names of the witnesses by whom such violations may be proven under penalty of fine and forfeiture of his office. Gen. St. 1901, § 2462.—State v. Keener, 97 Pac. 860.

(Ky.) Since the Governor is the supreme civil authority in the state, and by virtue of his office, as commander in chief of the militia, may call the same into active service in his discretion, the exercise of such discretion is not subject to restraint or control by the courts, because to do so would be an interference by the judiciary with the executive department.—Franks v. Smith, 134 S. W. 484, 142 Ky. 232.

(La.) A court cannot compel a police jury to impose a tax, in obedience to a law directing it so to do.—Claiborne v. Police Jury, 7 Mart. (O. S.) 5.

(Minn.) The courts of the state have no jurisdiction of an action to compel the Governor of the state to make an allotment of public lands in conformity with a legislative grant.—St. Paul & C. Ry. Co. v. Brown, 24 Minn. 517.

(Minn.) The colonel of a regiment of the state militia was suspended from command, and the lieutenant colonel of the regiment ordered to take the command thereof, by orders of the Governor, as commander in chief. *Held*, that an application by the colonel for leave to file an information in the nature of quo warranto against the lieutenant colonel should be denied, as the orders, so far as they affected the right and duty of the latter, related to purely military operations, with which the courts should not interfere; the military authority of the Governor being evidently intended by the Constitution to be supreme.—State v. Harrison, 34 Minn. 526, 26 N. W. 729.

(Minn.) The district court has jurisdiction of the state auditor as respects the control and disposition of a deposit made by an insurance company for the benefit of policy holders, and in which the state, as such, has no interest.—Hayne v. Metropolitan Trust Co. (Minn.) 69 N. W. 916, 67 Minn. 245.

(Miss.) The action of the board of control of the penitentiary with relation to the working of convicts, there being no charge of corruption or official misconduct, is not reviewable by the courts, so far as it is within the scope of its authority, granted by a constitutional act of the Legislature.—Henry v. State, 39 South. 856, 87 Miss. 1.

(Mo.) Although, in cases in which the act of Congress vests the officers of government with an absolute discretion in determining the rights of parties claiming land, the courts cannot interfere, yet, where titles have emanated, and a contest arises, the courts must determine the validity of the titles, and decide upon the legality of the acts of the officers.—Perry v. O'Hanlon, 11 Mo. 585, 49 Am. Dec. 100.

(Neb.) Cobbey's Ann. St. 1907, § 5514, in so far as it assumes to authorize an appeal from the decision of the county board upon the question of whether a proposed drain will be conducive to the public health, convenience, and welfare and is necessary for the reclamation of land, is void, for the question of drainage is a matter of governmental or administrative policy, and the power to exercise control over administrative bodies cannot be conferred upon the courts by the Legislature.—In re Johannes, 120 N. W. 176, 83 Neb. 689; Johannes v. Thayer County, Id.

(Neb.) Comp. St. 1909, c. 89, art. 4, providing for the formation of drainage districts and prescribing judicial procedure to be followed, is not violative of Const. art. 2, § 1, dividing the powers of state government into three departments.—Drainage Dist. No. 1 v. Richardson County, 125 N. W. 796, 86 Neb. 355.

(N. J.) The courts have no power to compel the Governor to produce in court any paper which his official duty, in his opinion, requires him to withhold.—Thompson v. German Val. R. Co., 22 N. J. Eq. (7 C. E. Green) 111.

(N. Y.) A finding by a justice of the Supreme Court that rioting was continually occurring his county and a call on the brigadier general of the National Guard to aid in suppressing the same, as authorized by Military Law, § 115, *held* not objectionable as a usurpation of the constitutional prerogatives of the Governor as commander in chief of the military forces of the state.—People ex rel. Welch v. Bard, 103 N. E. 140, 209 N. Y. 304, affirming order 142 N. Y. Supp. 1140, 157 App. Div. 943.

(Okl.) The action of the Governor in convoking the Legislature at, or adjourning it to, a place other than the seat of government, when in his opinion the public safety or welfare, or the safety or health of the members require, such convoking or adjournment having been separately concurred in by a two-thirds vote of all the members elected to each branch of the Legislature as expressly allowed by Const. art. 6, § 14, is conclusive upon and not subject to review by the courts.—Coyle v. Smith, 113 Pac. 944.

(Okl.) The appointment of commissioners charged with the duty of selecting jurors is not necessarily an executive function, and the power to make such appointment may properly be conferred upon the judge of the district court.—Remer v. State, 109 Pac. 247.

(Pa.) It seems reasonable that the governor of a state, to whom is sent a libelous deposition concerning the character of a public officer, should exercise his own judgment with respect to the propriety of producing it in an action for libel, and he cannot be compelled to do so.—Gray v. Pentland, 2 Serg. & R. 23.

(Pa.) The Governor cannot be compelled by attachment to disclose, in aid of an investigation before a grand jury, secrets of the business of the executive department which he does not think best to reveal; nor can he or his agents be controlled by the courts in the manner of exercising the executive function.—Appeal of Hartranft, 85 Pa. St. 433, 27 Am. Rep. 667.

(S. C.) Const. art. 7, § 1, imposes exclusively on the Governor the duty to determine whether there has been a compliance with the Constitution preparatory to the ordering of an election for the formation of a new county, and courts have no power to interfere with him in the exercise of his discretion.—Lamar v. Croft, 53 S. E. 540, 73 S. C. 407.

(S. C.) Whether a proposed new county embraces the same territory as was embraced in a proposed county voted on within four years is, under the Constitution, exclusively for the Governor.—State v. Ansel, 58 S. E. 933, 78 S. C. 331.

(S. C.) Whether a petition by the residents of a portion of a county for an election to determine whether territory in question should be taken from one county and added to another should be granted is a matter for the Governor, with which the courts cannot interfere.—State v. Blease, 80 S. E. 263.

(Wash.) Under Const. art. 3, § 7, declaring that the Governor may, on extraordinary occasions, convene the Legislature by proclamation, it is his exclusive province to determine whether an occasion for an extra session exists, and his conclusion is not reviewable by the courts.—State v. Fair, 76 Pac. 731, 35 Wash. 127, 102 Am. St. Rep. 879.

(W. Va.) A court of equity has no power to enjoin the governor of a state, either in his private or official capacity, or any officer or person acting under his authority as governor, against removing the papers and movable property of the several state offices from the city of Charlestown to the city of Wheeling pending the determination of the validity of the act providing for the temporary removal of the state government to the city of Wheeling; the powers and duties springing from said act under the Constitution being executive, and of such nature that enjoining the Governor from executing such an act would be an invasion by the judiciary of executive powers conferred upon the Governor.—Slack v. Jacob, 8 W. Va. 612.

(W. Va.) An order of the Governor suppressing an issue of a paper having some circulation in territory under martial law, and tending to encite further disturbance, *held* not reviewable by the court.—Hatfield v. Graham, 81 S. E. 533.

(Wis.) St. 1898, § 2533a, providing the circuit judges shall appoint jury commissioners in certain counties, is not unconstitutional, as imposing duties of an executive or administrative character on judicial officers.—State v. Anson, 112 N. W. 475.

2. By Mandamus.

The courts may compel an executive officer to perform a mere ministerial act.

—(U. S.) Marbury v. Madisin, 5 U. S. (1 Cranch) 137, 2 L. Ed. 60; United States v. Schurz, 102 U. S. 378, 26 L. Ed. 167; Noble v. Union River Logging R. Co., 147 U. S. 165, 13 Sup. Ct. 271, 37 L. Ed. 123, affirming 20 D. C. 555;

(Ala.) Tennessee & C. R. Co. v. Moore, 36 Ala. 371;

(Cal.) Middleton v. Low, 30 Cal. 596; Stuart v. Haight, 39 Cal. 87; Harpending v. Same, 39 Cal. 189, 2 Am. Rep. 432;

(Colo.) Greenwood Cemetery Land Co. v. Routt, 17 Colo. 156, 28 Pac. 1125, 31 Am. St. Rep. 284;

(D. C.) United States v. Bayard, 5 Mackey, 428;

(Ga.) Bonner v. State, 7 Ga. 473;

(Ind.) Governor v. Nelson, 6 Ind. 496; Baker v. Kirk, 33 Ind. 517;

(Kan.) Martin v. Ingham, 38 Kan. 641, 17 Pac. 162;

(Md.) Magruder v. Swann, 25 Md. 173;

(Minn.) Minnesota & P. R. Co. v. Sibley, 2 Minn. 13 (Gil. 1);

(Mont.) Chumasero v. Potts, 2 Mont. 242;

(Neb.) State v. Thayer, 31 Neb. 82, 47 N. W. 704;

(Nev.) State v. Blasdel, 4 Nev. 241;

(N. C.) Cotten v. Ellis, 52 N. C. (7 Jones, Law) 545;

(Ohio) State v. Chase, 5 Ohio St. 528;

(Tex.) Kuechler v. Wright, 40 Tex. 600.

The courts have no power to compel, by mandamus, an executive officer to perform an act which is discretionary with him.

—(U. S.) United States v. Seaman, 58 U. S. (17 How.) 225, 15 L. Ed. 226; Gaines v. Thompson, 74 U. S. (7 Wall.) 347, 19 L. Ed. 62; Browning

v. McGarrahan, 76 U. S. (9 Wall.) 298, 19 L. Ed. 579; United States v. Black, 128 U. S. 40, 9 Sup. Ct. 12, 32 L. Ed. 354;
(D. C.) United States v. Boutwell, 3 McArthur, 172;
(Ga.) Bonner v. State, 7 Ga. 483;
(La.) State v. Dubuclet, 28 La. Ann. 85; Same v. Johnson, Id. 932; Same v. Cavanac, 30 La. Ann. 237;
(Md.) Green v. Purnell, 12 Md. 329;
(Mich.) People v. Auditor General, 38 Mich. 746;
(Pa.) Commonwealth v. Wickersham, 66 Pa. St. (16 P. F. Smith) 134;
(Tex.) General Land Office Com'rs v. Smith, 5 Tex. 471; Bledsoe v. International R. Co., 40 Tex. 537.

The courts have no power to compel, by mandamus, the Governor of a state to perform any act which it may be his duty to perform in his political capacity, or which he, officially, is required to perform by the Constitution or laws of the state.
—(Ark.) Hawkins v. Governor, 1 Ark. 570, 33 Am. Dec. 346;
(Fla.) Towle v. State, 3 Fla. 202; State v. Drew, 17 Fla. 67;
(Ga.) State v. Towns, 8 Ga. 360;
(Ill.) People v. Bissell, 19 Ill. (9 Peck) 229, 68 Am. Dec. 591; Same v. Dubois, 33 Ill. 9; Same v. Yates, 40 Ill. 126;
(Ind.) Hovey v. State, 127 Ind. 588, 27 N. E. 175, distinguishing Gray v. Same, 72 Ind. 567;
(La.) State v. Warmoth, 22 La. Ann. 1, 2 Am. Rep. 712; Id., 24 La. Ann. 351, 13 Am. Rep. 126; State v. Board of Liquidation, 42 La. Ann. 647, 7 South. 706, 8 South. 577;
(Me.) In re Dennett, 32 Me. 508, 54 Am. Dec. 602;
(Md.) Miles v. Bradford, 22 Md. 170, 85 Am. Dec. 643;
(Minn.) Chamberlain v. Sibley, 4 Minn. 309 (Gil. 228); Rice v. Austin, 19 Minn. 103 (Gil. 74), 18 Am. Rep. 330; Western R. Co. v. De Graff, 27 Minn. 1, 6 N. W. 341;
(Miss.) Vicksburg & M. R. Co. v. Lowry, 61 Miss. 102, 48 Am. Rep. 76;
(Mo.) State ex rel. Bartley v. Fletcher, 39 Mo. 388;
(N. J.) State v. Governor, 25 N. J. Law (1 Dutch.) 331;
(R. I.) Mauran v. Smith, 8 R. I. 192, 5 Am. Rep. 564;
(Tenn.) Jonesboro, F. B. & B. G. Turnpike Co. v. Brown, 67 Tenn. (8 Baxt.) 490, 35 Am. Rep. 713; Bates v. Taylor, 87 Tenn. (3 Pickle) 319, 11 S. W. 266, 3 L. R. A. 316.

The courts have jurisdiction to compel a state auditor or comptroller to issue a warrant for a sum due a public officer for salary.
—(Cal.) People v. Whitman, 6 Cal. 659;
(Iowa) Bryan v. Cattell, 15 Iowa, 538.

(U. S.) The issuance of a mandamus to control the action of the Postmaster General in respect to the performance of a merely ministerial act, to which the relator's right is completed by virtue of an act of Congress, and as to which the Postmaster General has no discretion, does not infringe the exclusive function of the executive department.—Kendall v. United States, 37 U. S. (12 Pet.) 524, 9 L. Ed. 1181.

(U. S.) The court cannot entertain an appeal from the decision of the Secretary of the Navy, nor revise his judgment in any case where the law authorized him to exercise his discretion; nor can it by mandamus control his discretion in matters committed to his care in the ordinary discharge of official duty.—Decatur v. Paulding, 39 U. S. (14 Pet.) 497, 10 L. Ed. 559.

(U. S.) A mandamus will not lie against the Secretary of the Navy, at the instance of an officer in the navy, to enforce payment of his pay.—Brashear v. Mason, 47 U. S. (6 How.) 92, 12 L. Ed. 357.

(U. S.) A mandamus will only lie against an officer, compelling him to do some ministerial act, where the laws require him to do it; and therefore where the United States were the plaintiffs, and a verdict was rendered for defendant for a certain amount, the Secretary of the Treasury cannot be com-

pelled by mandamus to credit the defendant upon the books of the treasurer with the amount of the verdict, especially where there has been no appropriation made by law for payment.—Reeside v. Walker, 52 U. S. (11 How.) 272, 13 L. Ed. 693, affirming Ex parte Reeside, Fed. Cas. No. 11,656 (Brunner, Col. Cas. 571, 1 Hayw. & H. 363).

(U. S.) Where the Secretary of the Treasury refused to pay a judge of the territory of Minnesota his salary for the unexpired term of his office, from which he had been removed by the President of the United States, a court has no power to interfere by mandamus.—United States v. Guthrie, 58 U. S. (17 How.) 284, 15 L. Ed. 102.

(U. S.) Where a statute directed the Commissioner of Patents to grant a reissue of patents in certain cases to assignees, it was the duty of the commissioner to decide whether the applicant was an assignee, with such interest as entitled him to a reissue, within the meaning of the statute; and, if he has decided that the applicant is not entitled to it, a court will not interfere by mandamus.—Commissioner of Patents v. Whiteley, 71 U. S. (4 Wall.) 522, 18 L. Ed. 335.

(U. S.) The court will not interfere by mandamus to compel the issuing of the patent for lands in a case where numerous questions of law and facts arise, and where the exercise of judicial functions of the proper officers is required.—United States v. General Land Office Commissioner, 72 U. S. (5 Wall.) 563, 18 L. Ed. 692.

(U. S.) Mandamus will not lie to compel a public officer to do a particular thing which his superior in authority has lawfully ordered him not to do.—Butterworth v. United States, 112 U. S. 50, 5 Sup. Ct. 25, 28 L. Ed. 656.

(U. S.) The treaty between the United States and Mexico, of July 4, 1868 (15 Stat. 679), for the adjudication of claims of citizens of either country upon the government of the other, provides (articles 2 and 5) that the decision of the commissioners or of the umpire shall be conclusive upon each claim decided upon, and that the presidents of both nations will give "full effect to such decisions, without any objection, evasion, or delay whatsoever," and that the result of the proceedings shall be a final settlement of every claim upon either government, and that the government entitled to a balance upon a settlement of all the claims should distribute it to the claimants in whose favor awards had been made. An award was made in favor of one Benjamin Weil. The Mexican government afterwards complained that this award was made on a fraudulent claim, and requested the United States to have it retried, though the finality of the award, as between the governments, was not questioned, and the installments due upon it were paid by Mexico. Act Cong. June 18, 1878, §§ 1, 5 (20 Stat. 144), provided that the Secretary of State should receive all moneys paid by Mexico in pursuance of the treaty, and should pay the same to the parties in whose favor the awards had been made, but that (section 5), there being charges of fraud as to the award in favor of Weil, the president was requested to investigate the same, and that if, in his opinion, the case should be retried, he was authorized to withhold the payment of that award until the case "shall be retried and decided, in such manner as the governments of the United States and Mexico may agree, or until congress shall otherwise direct." Congress never directed otherwise, nor was the case retried, although on July 13, 1882, the President negotiated a convention with Mexico for the rehearing of the case by a joint commission, which convention was rejected by the Senate. In 1889 the assignee of the award to Weil petitioned in the Supreme Court of the District of Columbia for a mandamus to compel the Secretary of State to pay him the moneys paid by Mexico on the Weil award. *Held*, that the political department still had control of the matter, and that the judicial department had no power to grant a mandamus.—United States v. Blaine, 139 U. S. 306, 11 Sup. Ct. 607, 35 L. Ed. 183.

(Ariz.) Mandamus will not lie to the Governor of a territory to sign a warrant on the treasurer for funds for a territorial asylum at the instance of the directors of the asylum.—Board of Directors of Territorial Insane Asylum v. Wolfley, 22 Pac. 383.

(Cal.) The courts have power to compel, by mandamus, state officers to issue warrants for money due under a contract with the state.—People v. Brooks, 16 Cal. 11.

(Cal.) Under Act April 1, 1876, § 4, "to provide for a supply of water for the university and for the asylum for the deaf, dumb and blind," the power to approve or disapprove of the appraisal made under the act is vested in the Governor, and his discretion cannot be controlled by mandamus.—Berryman v. Perkins, 55 Cal. 483.

(D. C.) Mandamus will not issue to compel the Secretary of the Treasury to pay a claim against the United States.—Mississippi v. Durham, 4 Mackey, 235.

(D. C.) Since the Secretary of the Treasury is vested with power to ascertain, by inquiry, who are the employés of the government entitled to the 20 per cent. increase, under Act Cong. Feb. 28, 1867, mandamus will not lie to interfere with his decision.—United States v. Boutwell, 7 D. C. 64.

(Ill.) When a bill has become a law by reason of the failure of the Governor to return the same with his objections within 10 days, whatever may be the duty of the Governor with reference to the law, he cannot be coerced by mandamus to perform the same.—People v. Hatch, 33 Ill. 9.

(Ill.) The court cannot by mandamus compel a Governor to deposit with the Secretary of State a bill which has been passed by the General Assembly, and which has not been returned by the Governor within the time limited.—Marshall v. Moses, 40 Ill. 126.

(Ill.) Mandamus lies to compel state officers to receive goods offered pursuant to a contract between the petitioner and the state, and to compel the issuanc by them of warrants in payment for goods received under the contract.—People v. Secretary of State, 58 Ill. 90.

(Ill.) The Supreme Court cannot compel the Governor to call an election, since one department of the government has no power to interpose against the co-ordinate department.—People v. Cullom, 100 Ill. 472.

(Ind.) The Governor of a state will not be compelled by mandamus to issue a commission to a duly-elected auditor of a county, where it appears that prior to the election an affidavit was filed with the Governor, stating that theretofore the person so elected had been treasurer of said county, and had failed to account for money that came into his hands.—Hovey v. State, 127 Ind. 588, 27 N. E. 175, 22 Am. St. Rep. 663.

(La.) The courts cannot compel the secretary of state to promulgate a law alleged to have been passed by the Legislature, the remedy being with the legislative or the executive department.—State v. Deslonde, 27 La. Ann. 71.

(La.) Under Code Prac. art. 834, providing that mandamus "may be directed to public officers to compel them to fulfill any of the duties attached to their office," constitutional executive officers are not exempt from judicial authority to compel them to perform specific duties imposed upon them by law.—State v. Houston, 40 La. Ann. 393, 4 South. 50, 8 Am. St. Rep. 532.

(Mich.) The courts have no jurisdiction to compel the Governor to comply with the acts of Congress requiring him to certify that a certain ship canal had been constructed according to the acts of Congress, when he is satisfied that such is the fact.—Sutherland v. State, 29 Mich. 320.

(Mich.) The Supreme Court has no jurisdiction, by mandamus, to coerce or direct the action of the board of state auditors, as they are made an independent tribunal by the Constitution of the state.—People v. Board of State Auditors, 32 Mich. 191.

(Mich.) As to duties imposed upon it by statute, as distinguished from duties imposed by the Constitution, the board of state auditors is subject to the judicial power, which may compel performance of such duties by mandamus.—People v. Board of State Auditors, 42 Mich. 422, 4 N. W. 274.

(Minn.) Where a duty is imposed upon an executive officer of the state as such officer, and not upon such incumbent as a private person, the judicial department will not interfere to compel the performance of such duty.—Rice v. Austin, 19 Minn. 103 (Gil. 74), 18 Am. Rep. 330; State v. Dike, 20 Minn. 363 (Gil. 314).

(Minn.) Under Gen. St. 1878, c. 38, §§ 1, 2, establishing a land office, and declaring that the state auditor shall be ex officio commissioner of the land office, and shall have general charge and supervision of lands belonging to the state, the auditor, while acting as commissioner of the land office, is an executive officer of the state, and his official acts are not subject to control by mandamus.—State v. Whitcomb, 28 Minn. 50, 8 N. W. 902; Same v. Braden, 40 Minn. 174, 41 N. W. 817.

(Minn.) An executive officer of the state is not subject to the control or interference of the judiciary in the performance of duties belonging to him as an executive officer, and no act done, or threatened to be done, by him in his official capacity, can be brought under judicial control or interference by mandamus or injunction, even when the act is purely ministerial.—Secombe v. Kittelson, 29 Minn. 555, 12 N. W. 519.

(Mo.) Under the constitutional provision giving the Supreme Court jurisdiction to issue writs of mandamus, the court has power to take jurisdiction, and issue a conditional writ to the Governor of the state, and after a return of the writ will determine whether that officer is subject to it or not.—Pacific R. Co. v. Price, 23 Mo. 353, 66 Am. Dec. 673.

(Mo.) Const. art. 3, divides the power of government into three departments, legislative, executive, and judicial, and declares that no persons in charge of one department shall exercise any powers properly belonging to either of the others, except where permitted by the Constitution. Article 5, §§ 1, 4, 5, vest the supreme executive power in the Governor, require him to see that the laws are faithfully executed, and to perform such duties as are prescribed by law. Article 14, § 6, provides that he shall take an oath to demean himself faithfully in office. *Held*, that mandamus will not lie to compel him to perform any duty pertaining to his office, ministerial or political, and whether commanded by the Constitution or by some law passed on the subject.—State ex rel. Robb v. Stone, 120 Mo. 428, 25 S. W. 376, 41 Am. St. Rep. 705, 23 L. R. A. 194.

(Mont.) Const. art. 4, § 1, prohibiting any one department of the state government from exercising any of the powers belonging to the other, does not prevent the courts from controlling by mandamus the exercise by the state executive of a purely ministerial duty.—State v. Smith, 57 Pac. 449, 23 Mont. 44.

(Neb.) The theory that the judiciary, in issuing a mandamus to a member of the executive branch of the government, is indirectly, and in violation of the Constitution, exercising power properly belonging to the executive department, has been repudiated by a long line of decisions in the state.—State v. Savage, 90 N. W. 898, 64 Neb. 684, judgment modified on rehearing 91 N. W. 557, 64 Neb. 684.

(N. C.) The courts may control the actions of the state treasurer, as an agent of the executive department, only so far as such actions may be ministerial and not discretionary, and may be required as a part of his duty.—Raleigh & A. Air-Line R. Co. v. Jenkins, 68 N. C. 499; Id., 502.

(Ohio) The courts may, by mandamus, compel a state auditor to issue notes to a bank which has complied with the law and is entitled to the issue.—Citizens' Bank of Steubenville v. Wright, 6 Ohio St. 318.

(Tenn.) Under Const. art. 3, prescribing the duties of the Governor, and Mill. & V. Code, §§ 1094, 1146, providing that it shall be his duty to issue a commission or certificate of election to each person elected Representative to Congress, a court of chancery has no jurisdiction of a bill to enjoin the Governor from issuing a certificate of election to Congress to an applicant, as the official action of the executive cannot be restrained by the courts.—Bates v. Taylor, 87 Tenn. (3 Pickle) 319, 11 S. W. 266, 3 L. R. A. 316.

(Tex.) The district court has no jurisdiction, by a writ of mandamus or otherwise, to control the action of the commissioner of the general land office in the issuance of railroad certificates.—Galveston, B. & C. N. G. Ry. Co. v. Gross, 47 Tex. 428.

(Tex.) The district court has no power over the state comptroller to compel him to issue a pension certificate.—Chalk v. Darden, 47 Tex. 438.

(Wis.) The rule that the courts cannot control or interfere with the officers of the executive department of the state does not prevent them from issuing quo warranto to determine the right of a person claiming to be Governor to hold that office.—Attorney General v. Barstow, 4 Wis. 567.

(Wis.) The courts may, by mandamus, compel a state treasurer to pay over the amount of official salary to one entitled to it under an assignment from the officer earning it.—State v. Hastings, 15 Wis. 75.

(Wis.) Where the secretary of state is required by statute to revoke the license of a foreign corporation which has violated the conditions of the license, the Supreme Court, in the exercise of its original jurisdiction, has power to issue mandamus to compel the revocation.—State v. Doyle, 40 Wis. 175, 22 Am. Rep. 692.

3. By Injunction.

(U. S.) The President of the United States cannot be restrained by injunction from carrying into effect an unconstitutional act of Congress, nor will a bill for that purpose be received by the Supreme Court, whether the President is described by his official title or simply as a citizen of a state.—Mississippi v. Johnson, 71 U. S. (4 Wall.) 475, 18 L. Ed. 437.

(U. S.) While the head of a governmental department is not subject to mandamus or injunction in matters involving the exercise of discretion, yet such writ may be issued against the Secretary of the Interior, where he attempts, without authority of law, to annul the action of his predecessor in office, approving the location of a railroad's right of way over public lands.—Noble v. Union River Logging R. Co., 147 U. S. 165, 13 Sup. Ct. 271, 37 L. Ed. 123.

(U. S.) A surveyor acting under special instructions, based upon an opinion of the Secretary of the Interior, surveyed an old French grant, and reported the same to the surveyor general. Protests were filed against the survey; but the surveyor general approved the same, and forwarded it, together with the protests and evidence, to the Commissioner of the General Land Office. The latter accepted the survey in part, but reserved the remainder for further consideration, meantime directing the surveyor general to withhold the filing of the triplicate plats from the local land office. The matter was then referred to the Secretary of the Interior, who held that the survey did not comply with the decision of his predecessor, and directed a new survey. *Held*, that the action of the surveyor general and the Commissioner did not exhaust the authority of the land department, but that the matter was still lawfully pending therein, and the courts, therefore, had no authority to enjoin the obliteration of the old survey, or the making of the new one.—City of New Orleans v. Paine, 147 U. S. 261, 13 Sup. Ct. 303, affirming 51 Fed. 833, 2 C. C. A. 516, 2 U. S. App. 330.

(U. S.) Equity has no jurisdiction of a bill on behalf of plaintiff and all other citizens similarly situated to enjoin a county supervisor of registration from performing duties prescribed by state registration laws, on the ground that such laws are unconstitutional, and operate to deprive plaintiff and others of their right to vote.—Green v. Mills, 69 Fed. 852, 16 C. C. A. 516, 25 U. S. App. 383.

(U. S.) Where the Public Service Commission or other body possessing legislative authority with executive power to put its acts into effect enacts an unconstitutional rule or order, it may be enjoined by the courts from enforcing it.—Delaware, L. & W. R. Co. v. Stevens, 172 Fed. 595, following Prentis v. Atlantic Coast Line Co. (U. S. Sup. Va.) 211 U. S. 210, 29 Sup. Ct. 67, 53 L. Ed. 150.

(Ark.) Under the special act creating the St. Francis drainage district (Acts 1905, p. 444) authorizing the district board to elect a district engineer for the term of two years, the courts cannot enjoin the board from employing a certain engineer who had been elected.—Seitz v. Meriwether, 169 S. W. 1175.

(Colo.) In voting on amendments to a state constitution the voters exercise a legislative function, and constitute a part of the legislative branch of the state government, and hence the Supreme Court has no jurisdiction to enjoin

the secretary of state from publishing such proposed amendments prior to their being voted on as required by the Constitution, though such amendments, if adopted, may be invalid.—People v. Mills, 70 Pac. 322, 30 Colo. 262.

(D. C.) The head of the executive department of a government cannot be enjoined from enforcing the execution of a general law affecting only public rights.—Grant v. Cooke, 7 D. C. 165.

(Ind.) Under the provisions of the Constitution and statutes of Indiana, certified copies of the returns of the votes cast for Lieutenant Governor are required to be transmitted to the speaker of the House of Representatives, in the care of the secretary of state, and the courts have no authority to stop, by injunction, these certified returns in the hands of the secretary of state, as he is the mere custodian thereof, and is bound by positive law to deliver them to the speaker of the House of Representatives, whose duty it is to open them in the presence of both houses of the General Assembly.—Smith v. Myers, 109 Ind. 1, 9 N. E. 692, 58 Am. Rep. 375.

(Mass.) A court of equity has no power to restrain the secretary of state from issuing a city charter on the ground that the statute authorizing such charter is unconstitutional.—Larcom v. Olin, 160 Mass. 102, 35 N. E. 113.

(Minn.) Injunction will not lie to restrain the Governor of the state from doing an act in his official capacity.—Western R. Co. v. De Graff, 27 Minn. 1, 6 N. W. 341.

(N. Y.) An injunction cannot be granted to restrain the acts of officers of the state, who are proceeding under authority of the law of the state, not even though the judge to whom the application is made deems the statute unconstitutional.—Thompson v. Commissioners of Canal Fund, 2 Abb. Prac. 248.

(Okl.) The execution of orders given by the President of the United States for the removal of intruders from government land will not be interfered with by injunction, the courts having no jurisdiction over the executive department of the government.—Guthrie v. Hall, 1 Okl. 454, 34 Pac. 380.

(Wis.) The courts are not bound to desist from enjoining a wrongful act because the wrongdoer is the Governor or a person acting by his direction.—Ekern v. McGovern, 142 N. W. 595, 154 Wis. 157, 46 L. R. A. (N. S.) 796.

4. Pardon, Parole, or Suspension of Sentence.

(Cal.) Pen. Code, § 1203, amended by Act April 6, 1911 (St. 1911, p. 689), authorizing the court, judge, or justice to suspend sentence during good behavior, is not invalid as an encroachment on the executive.—Ex parte Giannini, 122 Pac. 831.

(Conn.) Pub. Acts 1905, c. 142, § 4, as amended by Pub. Acts 1911, c. 106, § 1, relative to the suspension of sentence as construed, *held* not invalid as conferring the pardoning power on the courts.—Belden v. Hugo, 91 Atl. 369.

(Ind.) The power of staying the execution of a death sentence pending an appeal, conferred on the Supreme Court by Rev. St. 1881, § 1888, is not the granting of a reprieve, within the meaning of Const. art. 5, § 17, giving the Governor that power, since such a construction would annihilate article 3, § 1, which creates the three departments of government, and renders the judicial independent of the executive.—Parker v. State, 135 Ind. 534, 35 N. E. 179, 23 L. R. A. 859, modifying Butler v. Same, 97 Ind. 373.

(Neb.) Comp. St. c. 50, § 28, which makes intoxication a misdemeanor, affixes a penalty therefor, and provides that the magistrate before whom the conviction is had may remit any portion of such penalty, and order the prisoner discharged upon his giving information, under oath, of the person from whom he received the liquor which produced the intoxication, is not objectionable as conferring a pardoning power upon magistrates, which is, under Const. art. 5, § 13, exclusively conferred on the Governor.—Pleuler v. State, 11 Neb. 547, 10 N. W. 481.

(Neb.) The act of a Governor, revoking a parole granted under Cr. Code, § 570, is an exercise of discretion, not reviewable by the courts.—Ex parte Owen, 131 N. W. 914.

(Okl.) Inquiry on habeas corpus into the validity of a pardon, where petitioner is detained by the warden on an order of the Governor purporting to

revoke the pardon, is not an interference with the executive functions of the state.—Ex parte Crump, 135 Pac. 428,

(Tex.) Acts 32d Leg. c. 44, *held* not unconstitutional in granting a right to district judges to suspend sentences, within the provisions of Const. art. 4, § 11, granting the Governor the power to "reprieve" or grant "commutations of sentences."—Snodgrass v. State, 150 S. W. 162, 41 L. R. A. (N. S.) 1144.

(Tex.) Acts 33d Leg. c. 7, relative to suspension of sentence, *held* valid, and not to interfere with the pardoning power.—King v. State, 162 S. W. 890.

(Tex.) In view of Const. art. 1, §§ 9, 19, article 5, § 6, and article 1, § 12, the Court of Criminal Appeals has power to determine whether the Governor can revoke a conditional pardon merely because he deems it ill advised.—Ex parte Rice, 162 S. W. 891.

(Tex.) Statutes, under which district attorney and district judge may grant immunity to witness in respect to matters about which he may testify, *held* not to violate constitutional provision giving pardoning power to Governor.—Ex parte Muncy, 163 S. W. 29.

5. Election, Appointment, and Removal of Officers.

(U. S.) The act of Congress requiring the appointment of supervisors of elections by judges of the Circuit Courts is not objectionable, as requiring the court to perform nonjudicial duties, but comes within the authority given to Congress by the Constitution to "vest the appointment of such inferior officers as it thinks proper in * * * the courts of law."—In re Supervisors of Election, Fed. Cas. No. 13,628 (2 Flip. 228).

(Ala.) The courts of justice cannot inquire into the reasons of the executive for making an appointment to fill a vacancy, if the executive had the right to make the appointment.—State v. Adams, 2 Stew. 231.

(Ala.) Where the Legislature established a new judicial circuit, and elected, at the same session, one of its members as the judge thereof, notwithstanding the provision in the Constitution of the state that no Senator or Representative shall, during the time for which he is elected, be appointed to any civil office of profit which shall have been created, etc., during such term, it was held that the court had no power to control the appointment, by any inquiry into the constitutional power of the Legislature to make the election.—State v. Paul, 5 Stew. & P. 40.

(Ala.) Notwithstanding the Constitution confers upon the Legislature the right to elect the chancellor and judges, the judiciary are invested with authority to try and determine the constitutional qualifications of an individual elected by the two houses of the General Assembly to a judgeship.—State v. Porter, 1 Ala. 688, overruling Same v. Paul, 5 Stew. & P. 40.

(Ala.) Act Dec. 12, 1892, "to establish a board of commissioners of police for the city of Birmingham," which confers on the probate judge of Jefferson county the power to appoint the commissioners, is not unconstitutional on that account.—Fox v. McDonald, 101 Ala. 51, 13 South. 416, 46 Am. St. Rep. 98, 21 L. R. A. 529.

(Ark.) Appeals lie only to review judicial decisions. Under the Constitution, which divides the powers of government into legislative, executive, and judicial, and prohibits any person belonging to one department from exercising powers belonging to another, executive officers, such as registrars of election, cannot be constituted a court. Hence no appeal can be taken to a court from their decision.—Ex parte Allen, 26 Ark. 9.

(Ark.) Under the Constitution, the determination of the question as to whether a person exercising the office of Governor has been duly elected or not is vested exclusively in the General Assembly, and no state court has jurisdiction to try a suit in relation to such contest, be the mode or form what it may, whether at the suit of the Attorney General, or on the relation of a claimant through him, or by an individual alone claiming a right to the office.—State v. Baxter, 28 Ark. 129.

(Ark.) Const. 1868, art. 6, § 19, providing that contested elections for Governor and other officers therein named should be determined by the General Assembly, created that body a judicial tribunal, with exclusive jurisdiction over such contests.—Baxter v. Brooks, 29 Ark. 173.

(Cal.) In and by a law dividing a county, the Legislature gave authority to the county judges of the two counties to appoint commissioners to ascertain and settle the proportionate amount of indebtedness to be assumed by each. *Held*, that such appointment was the proper exercise of functions incident to their judicial position, and the appointment was therefore valid.—Tuolumne v. Stanislaus, 6 Cal. 440.

(Cal.) The constitutional provision that the powers of the state should be divided into legislative, executive, and judicial, and that the members of one department should have no part in the management of the affairs of either of the other departments, refers wholly to the powers of the state government; and hence it is not violated by Act April 1, 1878, empowering certain of the district judges to appoint members of a city police board.—Staude v. Election Com'rs of City and County of San Francisco, 61 Cal. 313.

(Cal.) Const. art. 3, providing that no person charged with the exercise of powers properly belonging to the executive, judicial, or legislative department shall exercise any functions appertaining to either of the others, except as expressly permitted by the Constitution, refers to the respective departments of the state government and not to local, county, and municipal governments which the Legislature might establish; and a superior judge, though he be classed as a person charged with the exercise of powers belonging to the judicial department of the state, in appointing probation officers, as expressly provided by Act March 8, 1909 (St. 1909, c. 133), which officers are not officers of the state government, but minor officers of the local county government, does not exercise functions intended to be described in the Constitution as appertaining to the executive department of the state.—Nicholl v. Koster, 108 Pac. 302.

(Colo.) Where the executive order of removal of the fire and police commissioners of the city of Denver, under Charter 1893, § 45, is questioned by the incumbent, the courts have power, and it is their exclusive duty, to determine whether the former incumbent or the new appointee is entitled to the office.—In re Fire & Excise Com'rs, 19 Colo. 482, 36 Pac. 234, distinguishing Trimble v. People, 19 Colo. 187, 34 Pac. 981.

(Fla.) Where the Governor instructs a tax collector, who is subject to suspension by him, to pursue a stated course of action in the performance of an official duty, involving private rights, and the comptroller advises such officer to pursue a contrary course, and the tax collector pursues the latter course, and the Governor suspends him for doing so, and the courts find that the course advised by the Governor was that prescribed by law, and that claimed to have been advised by the comptroller contrary to law, and that such violation of law was within the grounds for which the Governor is authorized to suspend such officer, they cannot review the propriety of the action of the Governor in making the suspension; since, under Const. art. 4, § 15, the power of review is in the Senate alone.—State v. Johnson, 30 Fla. 499, 11 South. 855.

(Ga.) Where two persons claim the right to the office of clerk of the court of ordinary, and one of them obtains a commission from the Governor, it is competent for the judiciary to go behind the commission, to inquire into the validity of the election, and to decide the rights of the contesting parties, notwithstanding the Governor may have issued a commission to one of them, from the evidence before him.—State v. Towns, 8 Ga. 360.

(Ga.) Act 1881, making it the duty of certain judges to appoint three freeholders as a board of registration and election managers for Savannah, does not contravene the constitutional requirement that "the legislative, judicial, and executive powers shall forever remain separate and distinct, and no person discharging the duties of one shall at the same time exercise the functions of either of the others."—Russell v. Cooley, 69 Ga. 215.

(Idaho) House Bill No. 92, passed by the twelfth session of the Legislature, authorizing the district judge of the judicial district in which a drainage district is located to appoint the drainage commissioners, is not an encroachment by the judicial department on the functions of the executive branch.—Elliott v. McCrea, 130 Pac. 785, 23 Idaho, 524.

(Ill.) The Governor who is empowered to remove any officer appointed by him, by a statute which is silent as to the mode of removal, may adopt such

mode as he may deem proper without his action being subject to revision by the courts, and without any written charge, notice, or any formal trial, and may determine for himself whether a good cause for removal exists.—Wilcox v. People, 90 Ill. 186.

(Ill.) In the act of 1869, authorizing the creation of the Chicago Park district, to be governed by the South Park commissioners, the original board of which was to be appointed by the Governor, the provision that vacancies in the board should be filled by a judge of the county circuit court did not violate Const. 1848, art. 2, on the ground that the judge in making the appointment was exercising executive or political, and not judicial, power, nor is any other constitutional provision violated thereby.—People v. Morgan, 90 Ill. 558.

(Ill.) The provision of the "Election Law" (Laws 1885, p. 119), giving to the county court power to appoint election commissioners, is not an infraction of the provision of Const. art. 3, § 1, distributing governmental powers into three departments, and forbidding that either of these departments shall exercise powers properly belonging to another department, as the constitutional jurisdiction of the county courts (1 Starr & C. St. p. 134) includes "such other jurisdiction as may be provided for by general law."—People v. Hoffman, 116 Ill. 587, 5 N. E. 596, 56 Am. Rep. 793; Same v. Prendergast, Id.; In re Brown, Id.; Wetherell v. Divine, Id.; Same v. Seipp, Id.

(Ind.) Act March 7, 1877 (Acts Reg. Sess. 1877, p. 28), providing that the judge of a court may, upon a change of venue from him, appoint a judge pro tempore, is constitutional.—Starry v. Winning, 7 Ind. 311; State v. Dufour, 63 Ind. 567.

(Ind.) Duties imposed on the Governor as a member of the state board of election commissioners by Acts 1911, c. 118, providing for the submission of a proposed new Constitution to the voters of the state, *held* ministerial and not gubernatorial, and therefore subject to control by the courts.—Ellingham v. Dye, 99 N. E. 1.

(Kan.) Where the Legislature vests the authority of making appointments in officers and boards, with the discretion to determine who is best qualified to serve the public, the courts cannot control the discretion and judgment so vested.—Dever v. Humphrey, 75 Pac. 1037, 68 Kan. 759.

(Kan.) Gen. St. 1909, c. 25, art. 13, §§ 2282–2299, creating the office of county auditor in certain counties, and conferring on the district court the power of appointing a person to such office, is a valid exercise of legislative authority.—Sartin v. Snell, 125 Pac. 47, 87 Kan. 485.

(Ky.) The superior court will not review an act of an inferior court in appointing or removing a clerk of the court, as the appointment of a clerk is not a judicial, but an executive, act.—Taylor v. Commonwealth, 26 Ky. (3 J. J. Marsh.) 401.

(Ky.) The right of approval and implied right of disapproval of the appointment of a deputy by the sheriff, conferred by law on the county court, belongs to the executive, and not the judicial, power of the court.—Applegate v. Applegate, 61 Ky. (4 Metc.) 236.

(Ky.) The court may not appoint a collector of taxes because the official authorized by law to appoint such collector fails to do so.—McLean County Precinct v. Deposit Bank of Owensboro, 81 Ky. 254.

(La.) Since Act 1852 (consolidating the city of New Orleans) § 21, declares that the board of assistant aldermen shall have the sole power of the impeachment of city officers not otherwise provided for, the court has no right of supervision over such boards, in the exercise of such power.—State v. Ramos, 10 La. Ann. 420.

(La.) The express authority given by statute to the Governor to remove a tax collector, and appoint a successor, will not be interfered with by the courts.—State v. Fisher, 26 La. Ann. 537.

(La.) The courts cannot exercise any supervision over the employment, by the Governor, of the discretionary power of removal of officers.—State v. Cahen, 28 La. Ann. 645.

(La.) The law which empowers judges to suspend sheriffs from office, on account of their neglect or refusal to perform their duties, is not unconstitu-

tional, on the ground that a sheriff can be removed from office only by the General Assembly.—State v. Richmond, 29 La. Ann. 705.

(La.) The action of the Governor, in the exercise of the power given him by law to remove public officers for certain causes, is final, and irreversible by the judiciary.—State v. Lamantia, 33 La. Ann. 446.

(La.) The courts will not pass on the question of whether the Governor, in removing a public officer, whom he had power to remove, acted improperly and without cause.—State v. Rost, 47 La. Ann. 53, 16 South. 776.

(La.) Under Const. art. 9, and Rev. St. 1870, § 1018, judge of criminal district court *held* to have jurisdiction to summon witnesses whose examination was desired by prosecuting attorneys relative to violations of the election laws, notwithstanding Const. art. 96, limiting the duties or functions of courts and judges to judicial duties.—State ex rel. Pleasant v. Baker, 63 South. 403, 133 La. 919.

(La.) A district judge's exercise of his statutory authority to appoint jury commissioners *held* not such an executive function as to violate Const. art. 96, providing that judges shall perform only judicial functions, except as herein provided.—State v. Jackson, 64 South. 481, 134 La. 599.

(Md.) The fact that the senate, by refusing to take action on a nomination submitted to it by the Governor for its concurrence, might obstruct the making of appointments to office, will not authorize the judicial branch of the government to compel it to take action.—Watkins v. Watkins, 2 Md. 341.

(Mass.) St. 1821, c. 109, § 6, providing that the justices of the police court of Boston shall, under the style of the "justices' court for the county of Suffolk," have original exclusive jurisdiction of all civil suits, which before might have been determined by any justice of the peace of that county, is constitutional. It does not interfere with the power of the Governor to appoint all judicial officers.—Wales v. Belcher, 20 Mass. (3 Pick.) 508.

(Mass.) St. 1873, c. 376, § 1, directing the justices of the Supreme Court to appoint supervisors of election, is unconstitutional, as such officers are executive officers.—In re Supervisors of Election, 114 Mass. 247, 19 Am. Rep. 341.

(Mass.) St. 1911, c. 624, providing that the action of an officer or board in removing or suspending a person holding certain offices classified under the civil service law may be "reviewed" by a court, whose decision shall be conclusive upon the parties, does not contravene Declaration of Rights, art. 30, prohibiting the judicial department, from exercising executive powers.—Driscoll v. Burns, 100 N. E. 640, 213 Mass. 493.

(Mich.) Under Const. art. 3, §§ 1, 2, declaring that no person belonging to one department of the government may exercise the powers of another, the action of the Governor removing from office the mayor of the city, as authorized by Comp. Laws 1897, § 1159, is not reviewable by certiorari, but the validity of the action may be determined in proceedings between the mayor removed and the one claiming to act by virtue of the Governor's action.—Germaine v. Ferris, 142 N. W. 738, 46 L. R. A. (N. S.) 857.

(Minn.) Sp. Laws 1883, pp. 189, 192, cc. 51, 54, in so far as they require the judges of the district court or a majority of them to appoint the members of the board of control of Ramsey county, are unconstitutional because assuming to impose on the members of the judicial department powers and functions which are by the Constitution assigned to another department of the government.—State v. Brill, 111 N. W. 294, 639, 100 Minn. 499.

(Mo.) The provision in Rev. St. p. 201, that, in the case of a tie in the election of clerks of courts, the court shall decide, is constitutional.—Lewis v. State, 12 Mo. 128.

(Mo.) In issuing a commission, the Governor acts in a political or executive capacity, and he alone can judge whether it should be exercised or not, and the courts can neither control nor interfere with him in the exercise of this right.—In re Inquiries of the Governor, 58 Mo. 369.

(Neb.) Const. art. 6, § 2, confers upon the Supreme Court original jurisdiction in quo warranto proceedings. Code Civ. Proc. § 704, provides that an information may be filed against any person unlawfully holding or exercising

any public office within the state. *Held*, that the Supreme Court has jurisdiction to entertain quo warranto proceedings to determine the claims of contestants to the office of Governor, notwithstanding another provision of the Constitution that contests of elections for the executive department of the state shall be determined by the Legislature, the latter remedy not being exclusive.—State v. Boyd, 31 Neb. 682, 48 N. W. 739.

(Neb.) Const. art. 2, § 1, provides for the division of the powers of the government into the legislative, executive, and judicial departments, and that no person in one department shall exercise any power belonging to the other, except as expressly provided by the Constitution. The charters of cities of a metropolitan class provide that the mayor shall be the chief executive officer, and shall have power, with the consent of council, to appoint all necessary officers unless otherwise provided, and shall have the superintendence of all officers and affairs of the city, except as otherwise provided. The charters also provide for boards of five park commissioners whose duties are wholly executive and are administrative, and are responsible alone to the city and whose reports and recommendations are made to the mayor and council. *Held*, that that part of the charter which provides for their appointment by the judges of the district court of the judicial district in which such cities shall be situated is unconstitutional, as the appointment is not a judicial act and the appointing power is with the mayor and council.—State v. Neble, 117 N. W. 723; Same v. Latenser, Id.

(Nev.) Act 1897, p. 50, to incorporate the city of Reno, and naming the first city officers, and constituting county officers ex officio city officers, is not an infringement on the constitutional right of the executive to make appointments, under Const. art. 5, § 8.—State v. Ruhe, 52 Pac. 274, 24 Nev. 251.

(N. J.) If the power were executive, the attempt to confer it on the chief justice would still be ineffectual, under Const. art. 3, declaring that "the powers of the government shall be divided into three distinct departments, the legislative, executive, and judicial, and no person belonging to or exercising one of these departments shall exercise any of the powers properly belonging to either of the others."—In re Cleveland, 51 N. J. Law (22 Vroom) 311, 17 Atl. 772.

(N. Y.) The court has no jurisdiction to oust an officer in no way connected with the administration of justice in the court, and over whose appointment it has no control, from an office, the duties of which he is discharging under color of an appointment by the Governor, until his right to the office has been settled in the manner pointed out by the statute.—Tappan v. Gray, 9 Paige, 507, reversing Willoughby v. Comstock, 3 Edw. Ch. 450.

(N. Y.) Laws 1907, c. 538, providing for a hearing and determination by the Supreme Court of an election contest, confined to such questions of law and fact as arise on an inspection of the ballots themselves, is not void as imposing only ministerial duties on the court.—Metz v. Maddox, 105 N. Y. Supp. 702, 121 App. Div. 147, order reversed Same v. Dayton, 82 N. E. 507.

(Ohio) Where the Governor has the power to remove officials for misconduct in office, and exercises that power, not acting in a judicial capacity, within the meaning of the Ohio Constitution, it follows that the exercise of that power by him cannot be questioned in a proceeding in quo warranto.—State v. Hawkins, 44 Ohio St. 98, 5 N. E. 228.

(Ohio) Since the judges of the court of common pleas may be authorized to select juries, an act authorizing them to appoint jury commissioners is valid.—State v. Kendle, 52 Ohio St. 346, 39 N. E. 947.

(Okl.) The action of the Governor in removing an officer, if within the limits of his statutory power, will not be reviewed by the courts.—Cameron v. Parker, 2 Okl. 277, 38 Pac. 14.

(Okl.) Enforcing Act (Laws 1907–08, c. 69) art. 3, § 23, providing that the judge of the district court wherein a case is pending to remove an officer for failure to enforce the provisions of the act may, during pendency of the proceeding, suspend such officer from his office, is not violative of Const. art. 4, § 1, providing that the powers of government shall be divided into three separate departments and that, except as provided in the Constitution, they shall

be separate, and neither shall exercise the powers properly belonging to either of the others.—Leedy v. Brown, 113 Pac. 177, 27 Okl. 489.

(S. C.) The courts cannot control the Governor's prerogative under Const. art. 7, § 1, in determining whether constitutional requirements preparatory to holding an election to establish a new county have been met.—State v. Weeks, 70 S. E. 898, 87 S. C. 474.

(Tenn.) Under Const. art. 3, prescribing the duties of the Governor, and Mill. & V. Code, §§ 1094, 1146, providing that it shall be his duty to issue a commission or certificate of election to each person elected representative to Congress, a court of chancery has no jurisdiction of a bill to enjoin the Governor from issuing a certificate of election to Congress to an applicant, and to compel him to deliver a certificate already issued to complainant, as the official action of the executive can neither be restrained nor coerced by the courts.—Bates v. Taylor, 87 Tenn. (3 Pickle) 319, 11 S. W. 266, 3 L. R. A. 316.

(W. Va.) Code 1891, c. 116, p. 773, providing for the appointment by the circuit court of jury commissioners, is not in violation of the provisions of the Constitution, prohibiting the legislature from conferring on any court or judge the power of appointment to office, and providing for the appointment by the Governor, with the advice and consent of the Senate, of all officers whose offices are established by the Constitution, or shall be created by law; since jury commissioners are not public officers, but officers of the court.—State v. Mounts, 36 W. Va. 179, 14 S. E. 407, 15 L. R. A. 243.

(Wis.) Under the Constitution and laws of this state, whatever power or duty is expressly given to or imposed upon the executive department, especially where the subject is committed to the discretion of the chief executive officer, is altogether free from the interference of the other branches of government, and therefore whatever may have influenced the Governor in the removal of a prison commissioner will not be considered by the court.—Attorney General v. Brown, 1 Wis. 513.

(Wis.) The Supreme Court of this state, without assuming to direct the executive in the discharge of his functions, nor any control in such discharge, has yet such jurisdiction over the inhabitants of the state that it will prevent any one of them from usurping the functions or intruding into the office of the executive, and punish such usurpation.—Attorney General v. Barstow, 4 Wis. 567.

(Wis.) A court or judge may be legally authorized to appoint an officer, even though he be a state officer, where the duties of the officer are to assist the court in the performance of acts of an administrative character necessary or proper to the due discharge of judicial duties.—In re Appointment of Revisor, 124 N. W. 670, 141 Wis. 592.

(Wis.) St. 1898, § 959—46d, added by Laws 1911, c. 586, subsec. 19, provides that hearing before the board of fire and police commissioners for removal of members of the fire and police department shall be on verified charges, and subsections 20 and 21 provide for an action in the circuit court by a member removed to reverse the decision of the board, the inquiry of the court to be confined to a determination as to the reasonableness of the decision of the board, but provides that the court may require a further or additional return and the taking of further and additional testimony. Const. art. 7, § 8, provides that the circuit courts shall have supervisory control over all inferior tribunals, and may issue the necessary writs to carry into effect their orders. *Held*, that the provision authorizing the court to require the board to take further and additional testimony and make return thereof does not give the court the power to make findings, but is simply a mode of review of findings to be made by the board within the purview of the constitutional provisions. —Clancy v. Board of Fire & Police Com'rs of Milwaukee, 138 N. W. 109, 150 Wis. 630.

III. Powers, Duties, and Acts under Legislative Authority.

(U. S.) Act June 22, 1874, c. 391, § 6, 18 Stat. 187, 1 Supp. Rev. St. (2d Ed.) 33 (U. S. Comp. St. 1901, p. 2020), which requires the court or judge to certify the value of the services of an informer in regard to frauds upon the customs

revenue, which have been the subject of a judicial proceeding, for the information of the Secretary of the Treasury, seeks to impose upon the court duties which are administrative, and not judicial, and is unconstitutional.—United States v. Queen, 105 Fed. 269.

(Colo.) Act April 11, 1903 (Sess. Laws 1903, p. 316, c. 139, § 9), commonly known as the "Torrens Land Law," providing that all acts performed by registrars of title under that act shall be performed under rules and instructions established and given by the district court, does not devolve executive duties on the court, in violation of Const. art. 3, dividing the powers of government into three distinct departments, and declaring that no person charged with the exercise of powers properly belonging to one department shall exercise any power properly belonging to either of the others.—People v. Crissman, 92 Pac. 949.

(Conn.) Laws 1899, p. 175, authorizing a valuation to be made by the assessor of all the taxable property of New Haven, and directing that all persons dissatisfied therewith may file a statement with the board of relief, and an appeal therefrom to the superior court, is unconstitutional as to the provision authorizing an appeal to the superior court, since the preparation of the list and the action of the court on the appeal therefrom is an administrative, and not a judicial, act.—Bradley v. City of New Haven, 48 Atl. 960, 73 Conn. 646.

(Conn.) To be suitable as a licensee, an applicant must not have been convicted of a violation of law, must not be a sheriff, etc., and must not be a woman of ill repute, or the keeper of a house of ill fame or a gambling place. To be suitable, a place must not be in the fair grounds, nor in a dwelling, nor in insufficiently policed or residential sections, etc. By the Act of 1901 the commissioners are given discretion to refuse a license on finding that a sufficient number of saloons already exist in a locality. *Held*, that though in determining the illegality of the commissioners' refusal of a license, or their abuse of discretion, the court must decide questions of suitability, and so, in a qualified manner, have a trial de novo, yet it is not required to decide whether it itself would have rejected the license, and thereby exercise administrative powers.—Appeal of Moynihan, 53 Atl. 903, 75 Conn. 358.

(Conn.) The board of railroad commissioners is an adminstrative body, and acts in a purely administrative capacity in ordering the abolition of a grade crossing, and the superior court cannot, without usurping extrajudicial power, set aside the board's decision, and order the abolition of the crossing in accordance with plans and specifications original with the court itself, on the sole ground of policy and practical expediency; and Gen. St. 1902, §§ 3718, 3747, in so far as they attempt to authorize the court so to do on appeal from the commissioners, are unconstitutional.—Appeal of Spencer, 61 Atl. 1010, 78 Conn. 301; Appeal of Stoughton, Id.

(Ga.) The act of December 20, 1893, "to provide for the filing, hearing, and determining of contests in contested elections in this state" (Acts 1893, p. 124), which creates a special tribunal to hear such contests, presided over by a judge of the superior court, is not violative of paragraph 23, § 1, art. 1, of the Constitution (Code, § 5015), which declares: "The legislative, judicial and executive powers shall forever remain separate and distinct, and no person discharging the duties of one, shall at the same time exercise the functions of either of the others, except as herein provided."—Johnson v. Jackson, 27 S. E. 734, 99 Ga. 389.

(Ill.) Hurd's Rev. St. 1909, c. 93, creating examining boards in various counties for the examination of miners, members of which are to be appointed by the county judges, was not unconstitutional as imposing nonjudicial duties on such judges; the Legislature being authorized to require courts or the judges thereof to appoint various officers not belonging to the judicial department of the government.—People v. Evans, 93 N. E. 388, 247 Ill. 547.

(Ind.) Act March 9, 1895, § 12, designating certain duties which the judge of the circuit court shall perform on the relocation of the county seat, is not unconstitutional as designating certain ministerial duties to be performed by the judge.—Board of Com'rs of Jackson County v. State, 46 N. E. 908, 147 Ind. 476.

(Ind.) Rev. St. 1894, § 3629 (Rev. St. 1881, § 3166), providing for the appointment of city commissioners by the judge of the circuit court to determine the assessment of benefits and damages in the laying out of streets, is not unconstitutional, as conferring executive power on the judiciary.—City of Terre Haute v. Evansville & T. H. R. Co., 46 N. E. 77, 149 Ind. 174, 37 L. R. A. 189.

(Ind.) Acts 1889, p. 261, establishing a board of children's guardians, and providing that the members shall be appointed by the circuit court, and shall serve without compensation, is not unconstitutional, in that it attempts to delegate executive power to the circuit court, by investing that tribunal with the authority to appoint the members of the board.—Wilkinson v. Board of Children's Guardians of Marion County, 62 N. E. 481, 158 Ind. 1.

(Ind.) Burns' Rev. St. 1901, § 6990 (Rev. St. 1881, § 5145; Horner's Rev. St. 1901), authorizing a justice of the peace to appoint some resident of the county to take charge of and confine insane persons committed by such justice under Acts 1855, p. 133 (Burns' Rev. St. 1901, §§ 6987-6995; Rev. St. 1881, §§ 5142-5150; Horner's Rev. St. 1901), does not confer ministerial powers on a judicial officer in violation of Const. art. 3, dividing the government into separate departments—legislative, executive (including administrative), and judicial—and forbidding the exercise by an officer of one department of any of the functions of another, except as provided in the Constitution.—Board of Com'rs of Madison County v. Moore, 68 N. E. 905, 161 Ind. 426.

(Iowa) Code, § 747, as amended by Acts 27th Gen. Assem. c. 25, authorizing the appointment of trustees of waterworks in cities of the first class by the district court, which is a constitutional court and subject to Const. art. 3, § 1, providing that no person charged with the exercise of powers belonging to one of the departments of government shall exercise any functions appertaining to either of the others, except as provided in the Constitution, is unconstitutional and void, as authorizing the performance by the court of a nonjudicial function, not connected with the exercise of the judicial powers conferred on the court.—State v. Barker, 89 N. W. 204, 116 Iowa, 96, 57 L. R. A. 244, 93 Am. St. Rep. 222.

(Ky.) The fact that the act of May 20, 1897, provides for the appointment by the circuit judge of guards to protect property against mobs does not render it unconstitutional, as conferring upon the circuit judge other than judicial powers, that officer being a conservator of the peace throughout the commonwealth.—Cahill v. Perrine, 49 S. W. 344, 105 Ky. 531; Id., 50 S. W. 19, 105 Ky. 531.

(La.) Sess. Act 1877, p. 55, which confers on the district judges the power to appoint jury commissioners, is constitutional, the duty imposed on them being judicial within Const. 1868, art. 82, which forbids any duties or functions being attached to the judges but such as are judicial.—State v. Miles, Man. Unrep. Cas. 180.

(Md.) Acts 1894, c. 6, § 7, providing that, where objections are filed to an application for a liquor license in Carroll county, both the application and objections shall be referred to the circuit judge, who shall, on notice, determine whether the license applied for shall be issued or not, imposes a judicial duty on the circuit judge, and hence is not repugnant to Bill of Rights, art. 8, providing that the legislative, executive, and judicial powers of the government shall forever be separate and distinct, and that no person exercising the functions of one of said departments shall discharge the duties of any other, and article 33, providing that no judge shall hold any other office or political trust.—McCrea v. Roberts, 43 Atl. 39, 89 Md. 238, 44 L. R. A. 485.

(Md.) Under Baltimore City Charter, § 170, providing that the determination of the Baltimore city court refusing a decision of the appeal tax court as to the revaluation of the property may be appealed to the Court of Appeals, and that the latter court shall hear and determine the question involved in the appeal, where the city appeals from a decision of the city court, the only question involved being the propriety of the amount of the valuation, the question cannot be reviewed, as such court can only be required to discharge its official duties, and hence cannot be directed by the General Assembly to sit in judgment on such a valuation, because such a valuation is

not the result of the exercise of any judicial duty.—City of Baltimore v. Bonaparte, 48 Atl. 735, 93 Md. 156.

(Md.) Acts 1901, c. 15, giving the control of the jail of Anne Arundel county to a board of visitors appointed by the judges of the circuit court, is an attempt to confer the nonjudicial power of appointment on the judges, in violation of Declaration of Rights, art. 8, declaring that a person exercising the function of either the executive, legislative, or judicial branch of the government shall not exercise any function of any other department.—Beasly v. Ridout, 52 Atl. 61, 94 Md. 641.

(Md.) Act 1896, p. 314, c. 195, providing, as a condition precedent to the submission of the question of the sale of intoxicating liquors as beverages in W. county, that a petition shall be presented to the circuit court, which is required to count the names on the petition, and ascertain whether such names are the names of persons who voted at the last election for Governor, and thereupon to order an election, is void as imposing on the court nonjudicial duties in violation of the Constitution.—Board of Sup'rs of Election for Wicomico County v. Todd, 54 Atl. 963, 97 Md. 247, 62 L. R. A. 809, 99 Am. St. Rep. 438.

(Md.) Acts 1902, p. 670, c. 455, places the courthouse and grounds of Upper Marlboro, Prince George's county, in the care, custody, and control of the crier of the circuit court of that county. Const. art. 4, § 9, provides that the judges of any court may appoint the necessary court officers, etc. Declaration of Rights, art. 8, declares that no person exercising judicial functions shall discharge duties of another character. *Held*, that the statute is violative of the Constitution in that it indirectly imposes on the judges—who appoint the crier—nonjudicial functions, and interferes with the court by requiring its officer to discharge other duties than those pertaining to his office as crier.—Prince George's County Com'rs v. Mitchell, 55 Atl. 673, 97 Md. 330.

(Mich.) Courts cannot lawfully be subjected to executive or ministerial interference in the exercise of their functions, and should not submit to it or receive directions for any purpose except from such other courts as by the Constitution have superintending control over inferior courts.—Allor v. Board of Auditors of Wayne County, 4 N. W. 492, 43 Mich. 76.

(Mich.) The duty of collecting inheritance taxes being necessarily incidental to the settlement of estate, it is no objection to the validity of the inheritance tax law that it imposes duties not judicial on the judge of probate.—Union Trust Co. v. Durfee, 84 N. W. 1101, 125 Mich. 487.

(Mich.) At common law the parties to a criminal action are the people on one side and the accused on the other, and the prosecuting officer has the duty of determining what witnesses shall be sworn to establish the case he presents, and the conduct of the trial for the people is an executive act administrative in its nature, and Pub. Acts 1905, No. 175, § 3, authorizing the court in trial for homicide to appoint experts to testify at the trial is unconstitutional, as imposing on the judicial department acts executive and administrative in character.—People v. Dickerson, 129 N. W. 199.

(Minn.) Gen. St. 1878, c. 11, § 58, as amended by Gen. Laws 1885, c. 2, § 5 (Gen. St. 1895, § 1567), providing for issuing distress warrants for the collection of personal property taxes without prior notice or opportunity to be heard, does not attempt to delegate executive authority to a judicial officer.—C. N. Nelson Lumber Co. v. McKinnon, 63 N. W. 630, 61 Minn. 219.

(Minn.) Gen. Laws 1905, p. 626, § 346, prohibiting the sale of liquors, and providing for the granting of licenses for the sale of spirituous liquors, is not unconstitutional as violating Const. art. 3, § 1, relating to the exercise of governmental functions, in that it conferred upon the judge of the district court and the chairman of the county commissioners certain duties in relation to the issue of licenses which are in part judicial and in part executive or legislative.—State v. Bates, 104 N. W. 709, 96 Minn. 110, 113 Am. St. Rep. 612.

(Miss.) Const. art. 6, entitled "Judiciary," provides for the formation of boards of supervisors, and gives them jurisdiction over roads, etc., and requires them to perform such other duties as may be required by law. *Held*, that statutes giving boards of supervisors the right to regulate the taking of

fish in their counties are not invalid, as giving a judicial body legislative functions.—Ex parte Fritz, 38 South. 722, 86 Miss. 210, 109 Am. St. Rep. 700.

(Mo.) Const. art. 3, forbidding interference between the three departments of government, has no application to Acts 1893, p. 157, providing for the ouster from office of those guilty of bribery or unfair means in securing office.—State ex rel. Crow v. Towns, 153 Mo. 91, 54 S. W. 552.

(Neb.) Cr. Code, § 509a, providing that the Supreme Court may reduce an excessive sentence, and pronounce such as in its opinion is warranted by the evidence, is not violative of the provisions of the Constitution forbidding the exercise by the judiciary of any power belonging to the executive branch of the government.—Palmer v. State, 97 N. W. 235, 70 Neb. 136.

(N. J.) Under Act March 23, 1900, providing that the judge of the court of common pleas, on the request of the justice of the Supreme Court, should hold the circuit court, and Act 1891, declaring that the law judge of the court of common pleas should ipso facto be appointed to hold the circuit court, the judge of the court of common pleas derives his authority to hold the circuit court from the appointment as judge of the court of common pleas, and not from the request of the justice of the Supreme Court, and the act is not void as conferring on the Supreme Court justice the power of appointing circuit court judge.—Commonwealth Roofing Co. v. Palmer Leather Co., 52 Atl. 389, 67 N. J. Law, 566.

(N. J.) County Park Act March 5, 1895 (Gen. St. p. 2618), is not unconstitutional, in that it gives a justice of the Supreme Court power of appointing park commissioners.—Ross v. Board of Chosen Freeholders of County of Essex, 55 Atl. 310, 69 N. J. Law, 291.

(N. J.) Act March 5, 1902, leaving to a justice of the Supreme Court the determination of the necessity of additional accommodations for the court, and the designation of location of buildings, if necessary, and the determination of the amount to be expended, is unconstitutional, as conferring on a judicial officer executive duties, in violation of Const. art. 3, providing that no department of government shall exercise powers properly belonging to another.—Moreau v. Board of Chosen Freeholders of Monmouth County, 53 Atl. 208, 68 N. J. Law, 480.

(N. J.) Laws 1901, c. 107, p. 239, providing for appointment of excise commissioners by the court of common pleas, is unconstitutional, as in violation of Const. art. 3, providing that the powers of the government shall be distinct, and as conferring an executive authority on a judicial officer.—Schwarz v. Town of Dover, 53 Atl. 214, 68 N. J. Law, 576.

(N. Y.) Laws 1897, c. 383, §§ 4–8, providing that justices of the Supreme Court may order certain persons to give testimony to enable the Attorney General to determine the propriety of a suit to enforce the anti-monopoly law (sections 1 and 2), do not impose upon the justice a function of a nonjudicial character. Orders (Sup.) 47 N. Y. Supp. 20, 21 Misc. Rep. 101, affirmed.—In re Attorney General, 47 N. Y. Supp. 883, 22 App. Div. 285, appeal dismissed 50 N. E. 57, 155 N. Y. 441.

(N. Y.) The anti-monopoly act (Laws 1899, c. 690), imposing upon justices of the Supreme Court the duty, on application of the Attorney General, of granting an order for examination before the justice, or a referee appointed by him, of a person whose testimony the Attorney General considers necessary to prepare his complaint, or prepare for trial of an action instituted by him under the act, is not unconstitutional, such duty being judicial both in character and form, though the language used is mandatory on its face, as the justice must exercise the judicial function of deciding whether the application is sufficient to make out a case under the statute, and because the object of the act is to secure testimony in relation to the violation thereof. Order, People v. Nussbaum (Sup.) 67 N. Y. Supp. 492, 55 App. Div. 245, reversed.—In re Davies, 61 N. E. 118, 168 N. Y. 89, 32 Civ. Proc. R. 163, 56 L. R. A. 855.

(N. Y.) Laws 1892, c. 493, relating to highways running through two or more towns of the same county, provides by section 1 that on presentation of a petition to the Supreme Court or of the county court it, if satisfied that the highway is necessary, and that its construction will afford a nearer route be-

tween two populous points in such towns, may direct that a notice shall be published of the time and place when an application for commissioners shall be made, and at such time may appoint such commissioners. *Held*, that the act is not unconstitutional, as conferring nonjudicial powers upon the Supreme Court, such procedure not being nonjudicial for want of a hearing, inasmuch as it is for the court first to consider the sufficiency of the facts set forth in the petition.—Citizens' Sav. Bank v. Town of Greenburgh, 65 N. E. 978, 173 N. Y. 215, reversing (Sup.) 65 N. Y. Supp. 554, 31 Misc. Rep. 428, which was affirmed 70 N. Y. Supp. 68, 60 App. Div. 225.

(N. Y.) New York Charter, § 1534, providing that on affidavit of five taxpayers, or of five members of the municipal assembly, or of the mayor, or of the comptroller, or of a commissioner of docks, alleging misconduct of any city official, a justice of the Supreme Court may order an examination before him of officials touching such matters, is not unconstitutional, as conferring on justices of the Supreme Court a nonjudicial power.—In re Leich, 65 N. Y. Supp. 3, 31 Misc. Rep. 671.

(N. D.) Laws 1897, c. 87, relating to societies organized for the purpose of securing homes for orphans, and requiring such a society, after incorporating, to procure and file with the secretary of state a certificate, signed by the Governor and three or more members of the Supreme Court, of their confidence in the trustworthiness of the corporation, is not violative of Const. § 96, as imposing a nonjudicial duty on the members of the Supreme Court.—In re Kol, 88 N. W. 273, 10 N. D. 493.

(N. D.) Laws 1909, p. 266, c. 183, imposing on district judges certain duties as to the issuance of druggist's permits, is not unconstitutional, though such duties are administrative, and not judicial, in character.—Kermott v. Bagley, 124 N. W. 397.

(Wash.) Drainage Law (Laws 1895, pp. 271–296, c. 115), requiring the jury, in proceedings to establish a system of drainage, to ascertain separately the damages and benefits to each tract of land not taken and the value of the land to be taken, and providing that a transcript of the proceedings shall be certified to the county auditor, who proceeds as directed by section 16 to make the assessment, does not impose on the court and jury the duty of making an assessment in violation of Const. art. 7, § 9, authorizing the Legislature to vest in municipal authorities the power to make assessments for improvements.—State v. Superior Court of Skagit County, 85 Pac. 264, 42 Wash. 491.

(Wis.) Those provisions of Laws 1903, p. 65, c. 44, which commit to the county court the duty of fixing the value of the property inherited or bequeathed and the amount of inheritance tax imposed by the statute, are not objectionable as imposing administrative duties upon judicial officers.—Nunnemacher v. State, 108 N. W. 627, 129 Wis. 190, 9 L. R. A. (N. S.) 121.

(Wis.) Where the Legislature has imposed upon executive and administrative officers an absolute duty involving nothing of judgment or discretion, the ministerial duty may be enforced by the courts if there is no other adequate method provided.—State v. Rose, 122 N. W. 751, 140 Wis. 360.

(217 Fed. 849)

UNITED STATES v. BRANNAN.

(Circuit Court of Appeals, Fifth Circuit. October 31, 1914.)

No. 2627.

1. PUBLIC LANDS (§ 120*)—SUIT FOR CANCELLATION OF PATENT—ISSUES AND PROOF.

In a suit by the United States for the cancellation of a patent to land on the ground of fraud, brought against the patentee and subsequent grantees, where the bill alleged facts showing that complainant was entitled to such cancellation as against the patentee, which facts were proved, further allegations that the other defendants purchased with knowledge of the fraud were surplusage, and a failure to prove them did not constitute a material variance; but that one or more of such defendants bought in good faith for value and without notice was an affirmative defense, without allegation and proof of which complainant was entitled to the relief prayed for.

[Ed. Note.—For other cases, see Public Lands, Cent. Dig. §§ 332-335; Dec. Dig. § 120.*]

2. EVIDENCE (§ 383*)—DOCUMENTARY EVIDENCE—CONCLUSIVENESS.

In such a suit, recital of a consideration in the deed to the last grantee, or in prior deeds, is not proof that such consideration, or any valuable consideration, was paid, to sustain an allegation that he was a bona fide purchaser.

[Ed. Note.—For other cases, see Evidence, Cent. Dig. §§ 1660-1677; Dec. Dig. § 383.*]

Appeal from the District Court of the United States for the Southern District of Alabama; Harry T. Toulmin, Judge.

Suit in equity by the United States against Lewis I. Brannan and others. Decree for defendant Brannan, and the United States appeals. Reversed.

For opinion below, see United States v. Cowart, 205 Fed. 316.

Alex. D. Pitts, U. S. Atty., of Selma, Ala., and Harry T. Pegues, Asst. U. S. Atty., of Mobile, Ala., for the United States.

Joseph C. Rich and J. Gaillard Hamilton, both of Mobile, Ala., for appellee.

Before WALKER, Circuit Judge, and SHEPPARD and CALL, District Judges.

WALKER, Circuit Judge. [1] The bill in this case sought the cancellation of a patent to land issued to Vicy M. Cowart on the commutation of a homestead entry made by her, and of deeds to the same land made, respectively, by the patentee to one Wilson, and by Wilson to the appellee Brannan. The patentee, Wilson and Brannan were the parties defendant to the bill. The patentee and Wilson made no defense, and decrees pro confesso were entered against them. The answer of Brannan put in issue the allegations of the bill as to the fraud committed by the patentee in procuring the issuance of the patent, and duly averred that both Wilson and Brannan, in acquiring title to the land, were bona fide purchasers for a valuable consideration and with-

*For other cases see same topic & § NUMBER in Dec. & Am. Digs. 1907 to date, & Rep'r Indexes

out notice of any fraud committed by the patentee in the acquisition of the patent. The counsel for the appellee Brannan do not question, and there is no room for questioning, the sufficiency of the allegations and proof to show a right as against the patentee to have the patent canceled. It clearly appears that the patentee did not reside upon and cultivate the land for a period of 14 months, as required by the statute applicable in such a case, and that the evidence of such residence and cultivation, upon the faith of which the patent was issued, was false. 6 Fed. Stat. Anno. 317 (Comp. St. 1913, § 4589); United States v. Mills, 190 Fed. 513, 111 C. C. A. 345, 42 L. R. A. (N. S.) 752. The contention in behalf of the appellee is that there was a failure to make out the case alleged in the bill, in that the evidence adduced failed to prove the allegations of the bill to the effect that Wilson and Brannan, when the deeds to them respectively were made, knew of the fraud practiced by the patentee in acquiring the patent.

The allegations just mentioned were coupled with others to the effect that neither Wilson nor Brannan was a bona fide purchaser for value without notice of the plaintiff's equity. Plainly the allegations of the bill as to Wilson and Brannan being cognizant of the fraud committed by the patentee were made in anticipation of their defending on the ground that they purchased for value and without knowledge or notice of the facts which rendered the patent voidable, and were intended to serve, in effect, as a reply to such a defense, if it should be made. The other allegations of the bill disclosed a state of facts under which the plaintiff was entitled to a cancellation of the patent as against the patentee and any one claiming under her who did not acquire the title in such circumstances as to be protected against the fraud perpetrated by her in the acquisition of the patent. The averments of the bill distinctly negatived the existence of such a defense. It was only by Brannan's answer that an issue as to his being a bona fide purchaser for value was tendered. As the averments of the bill, other than those as to Wilson and Brannan knowing of the fraud committed by the patentee, disclosed a state of facts under which the plaintiff was entitled to a cancellation of the patent and of all subsequent conveyances of the land embraced in it, the allegations as to Wilson and Brannan knowing of the invalidating fraud committed by the patentee could be stricken from the bill without destroying the plaintiff's right of action. It follows that those allegations were surplusage. A failure to prove them did not constitute such a variance as was entitled to be given the effect of depriving the plaintiff of the right to the relief sought. Surplusage need not be proved. Immaterial variances between the allegations and the proof may be disregarded. The allegations as to Wilson and Brannan knowing of the fraud committed by the patentee were not descriptive of that which was set up as the ground for canceling the patent and the conveyances subsequent to it, and, in the absence of proof that either Wilson or Brannan was a bona fide purchaser for value, it was not incumbent upon the plaintiff to sustain those allegations by proof. Washington & Georgetown R. Co. v. Hickey, 166 U. S. 521, 17 Sup. Ct. 661, 41 L. Ed. 1101; Prestwood

v. McGowan, 148 Ala. 475, 41 South. 779; Greenleaf on Evidence (15th Ed.) § 51; 16 Cyc. 405.

[2] The appellee Brannan, by his answer, denied the material allegations of the bill, and as a further defense set up that he was a bona fide purchaser for value without notice. As stated above, the material averments of the bill were clearly proved. The result was to entitle the plaintiff to have the relief prayed, unless the affirmative defense pleaded was established by evidence. This the appellee Brannan wholly failed to do. To be entitled to protection as a bona fide purchaser, he must have bought in good faith and paid value. United States v. Des Moines, etc., Co., 142 U. S. 510, 530, 12 Sup. Ct. 308, 35 L. Ed. 1099. The burden was upon him to make satisfactory proof of purchase and payment. The recital in the deed to him did not constitute such proof. Lakin v. Sierra Buttes Gold Min. Co. (C. C.) 25 Fed. 337, 341; United States v. Hill (Sept. 28, 1914, U. S. D. C. Colo.) 217 Fed. 841; United States v. Cooper (Jan. 20, 1914, U. S. D. C. Mont.) 217 Fed. 846; Hodges v. Winston, 94 Ala. 576, 10 South. 535; United States v. Stinson, 197 U. S. 200, 25 Sup. Ct. 426, 49 L. Ed. 724; Boone v. Chiles, 10 Pet. 177, 211, 9 L. Ed. 388; 39 Cyc. 1780. There was no evidence that either the patentee's deed to Wilson or Wilson's deed to Brannan was supported by any valuable consideration. The result of the absence of such evidence was that the affirmative defense pleaded was wholly unsupported. The evidence adduced having clearly made out the case stated in the bill, and no defense set up having been supported by evidence, the plaintiff was entitled to a decree canceling the patent and vacating the subsequent conveyances of the land embraced in it.

In support of the contention that it was incumbent upon the plaintiff in the first instance to prove the averments of the bill as to Wilson and Brannan having, at the times the conveyances were made to them, respectively, knowledge of the fraud committed by the patentee, the counsel for the appellee Brannan refer us to the ruling made in the case of United States v. Clark, 200 U. S. 601, 26 Sup. Ct. 340, 50 L. Ed. 613. There is nothing in the opinion rendered in that case to indicate that proof of allegations so made is essential as to a defendant who sets up the defense that he was a bona fide purchaser for value, but who fails to prove a payment of value, or that the burden of proving that essential element of the defense mentioned can be regarded as assumed by a plaintiff whose bill distinctly negatives the existence of such a defense. For reasons above indicated, the averments of the bill as to the subsequent grantees having knowledge of the fraud committed by the patentee did not constitute a material feature of the case alleged, and the case was made out, whether those redundant allegations were or were not proved by the evidence adduced.

The decree of the District Court is reversed, and the case is remanded for further proceedings in conformity with the conclusions above stated.

(217 Fed. 852)

HOUSTON et al. v. UNITED STATES.†

(Circuit Court of Appeals, Ninth Circuit. October 13, 1914.)

No. 2288.

1. CONSPIRACY (§ 43*)—INDICTMENT—AVERMENT OF OVERT ACT.
An indictment under Rev. St. § 5440 (Comp. St. 1913, § 10201), for conspiracy to defraud the United States, is sufficient if it alleges the unlawful scheme and an act done by one of the conspirators which had for its purpose the furtherance of such scheme without alleging the manner in which it tended to effect that purpose. Nor is such an indictment defective because it fails to describe in detail the means by which the object of the conspiracy was to be attained.

[Ed. Note.—For other cases, see Conspiracy, Cent. Dig. §§ 79, 80, 84–99; Dec. Dig. § 43.*]

2. CONSPIRACY (§ 43*)—CRIMINAL PROSECUTION—EVIDENCE.
Under an indictment charging defendants as individuals with conspiracy to defraud the United States by means of fraudulent and collusive bids for the furnishing of coal, evidence was competent which showed that the bids were made in the name of corporations of which defendants were officers and were signed by defendants as such officers.

[Ed. Note.—For other cases, see Conspiracy, Cent. Dig. §§ 79, 80, 84–99; Dec. Dig. § 43.*]

3. CONSPIRACY (§ 45*)—CRIMINAL PROSECUTION—EVIDENCE.
On the trial of a defendant charged with conspiracy to defraud the United States, a letter written by defendant, who was secretary of a corporation, to a bank authorizing an employé to sign checks on behalf of the corporation, *held* admissible as tending to corroborate other evidence that the employé was also authorized to indorse checks made payable to the corporation.

[Ed. Note.—For other cases, see Conspiracy, Cent. Dig. §§ 100–104; Dec. Dig. § 45.*]

4. CONSPIRACY (§ 43*)—CRIMINAL PROSECUTION—EVIDENCE.
Under an indictment under Rev. St. § 5440 (Comp. St. 1913, § 10201), charging a conspiracy to defraud the United States, it was not error to admit evidence of other overt acts than those specifically named in the indictment.

[Ed. Note.—For other cases, see Conspiracy, Cent. Dig. §§ 79, 80, 84–99; Dec. Dig. § 43.*]

5. CRIMINAL LAW (§ 150*) — LIMITATION OF PROSECUTION — CONSPIRACY TO DEFRAUD THE UNITED STATES.
Where a conspiracy to defraud the United States was formed more than three years prior to the indictment, and acts in pursuance thereof were done both prior to and within the three years' prosecution therefor under Rev. St. § 5440 (Comp. St. 1913, § 10201), it is not barred by the limitation imposed by Rev. St. § 1044, as amended in 1876 (Comp. St. 1913, § 1708).

[Ed. Note.—For other cases, see Criminal Law, Cent. Dig. §§ 274, 275; Dec. Dig. § 150.*]

6. CONSPIRACY (§ 33*)—WHAT CONSTITUTES.
Under Rev. St. § 5440 (Comp. St. 1913, § 10201), relating to conspiracy to defraud the United States, the offense consists of the unlawful scheme

*For other cases see same topic & § NUMBER in Dec. & Am. Digs. 1907 to date, & Rep'r Indexes
† Rehearing denied November 17, 1914.

upon which the minds of conspirators have met, together with any act to effect the object of the conspiracy.

[Ed. Note.—For other cases, see Conspiracy, Cent. Dig. § 60; Dec. Dig. § 33.*

For other definitions, see Words and Phrases, First and Second Series, Conspiracy.]

Ross, Circuit Judge, dissenting.

In Error to the District Court of the United States for the Southern Division of the Western District of Washington; Edward E. Cushman, Judge.

Criminal prosecution by the United States against Charles E. Houston and John H. Bullock. Judgment of conviction, and defendants bring error. Affirmed.

The plaintiffs in error were convicted of conspiracy under section 5440 of the Revised Statutes. The indictment alleged, in substance, that on or about April 1, 1908, at Seattle, in the state of Washington, the defendants did willfully, knowingly, and unlawfully and feloniously conspire, combine, confederate and agree together to defraud the United States of divers large sums of money, and to bar the United States of its legal remedies to recover the moneys of which it was to be defrauded, and further to defraud and deceive the officers of the United States, and to defraud the United States of the benefits which would have resulted from honest and competitive bids and proposals to contract for the furnishing and sale to the United States of coal. The subject-matter of said conspiracy and the objects thereof, and the means by which the same were to be effected, were as follows: On or about March 10, 1908, the United States, acting through the Quartermaster for the Department of the Columbia of the United States Army, published and circulated an advertisement inviting bids and proposals to contract for the furnishing and sale to said United States of certain large quantities of coal which the United States desired to purchase for governmental use during the fiscal year commencing July 1, 1908, and ending June 30, 1909, at those certain military posts known as Ft. Davis, Ft. St. Michael, and Ft. Liscomb, all situated in the District of Alaska, which bids and proposals to contract were to be submitted to the said Chief Quartermaster on April 10, 1908; that the principal object of said conspiracy was to induce the United States to award and let contracts for the purchase of coal and to purchase and pay for said coal at grossly exorbitant and fraudulent prices, whereby the United States should be defrauded of large sums of money for the use and benefit of said conspirators, which object was to be effected and consummated by means of collusive, dishonest, and fraudulent bids and proposals to contract for the furnishing of coal, which bids and proposals to contract should be ostensibly competitive but in fact collusive, dishonest, and noncompetitive, and for grossly exorbitant prices to be secretly agreed upon by said conspirators; that it was also one of the objects of said unlawful conspiracy that. after the United States should have been thus defrauded, the true facts in the premises should be concealed from the United States, whereby the United States should be defrauded of its legal remedies to recover the moneys of which it should have been defrauded, which object was to be effected and consummated by means of false, fraudulent, and fictitious vouchers and entries, and books of account relating to the disbursement and use by said conspirators of the moneys of which the United States was to be defrauded as aforesaid. And the indictment charges that said unlawful conspiracy has, at all times since April 1, 1908, been furthered and continued in force by each of said conspirators.

The indictment alleges as overt acts: (1) That after the formation of said conspiracy and during the continuance thereof, and to effect the object thereof,

*For other cases see same topic & § NUMBER in Dec. & Am. Digs. 1907 to date, & Rep'r Indexes

said John H. Bullock on August 13, 1908, at Vancouver, Wash., did knowingly, unlawfully, and corruptly induce, persuade, and cause one John E. Baxter as Quartermaster of the United States Army to issue, and the said John E. Baxter did issue, a certain check or warrant drawn upon the First National Bank of Portland, bearing date August 13, 1908, in favor of John J. Sesnon Company, for the sum of $39.163.50, which check was subscribed by said Quartermaster and was for funds and money of the United States, then and there on deposit in the First National Bank of Portland, Or.; (2) that on September 1, 1908, at Seattle, Wash., the said Bullock did knowingly, unlawfully, and corruptly induce, persuade, and cause one Frank A. Kane as agent of said John J. Sesnon Company, to indorse and negotiate said check, which said Kane then and there did, and which check was thereafter, on September 2, 1908, duly paid by said First National Bank of Portland, Or., out of the aforesaid funds of the United States; (3) that on August 13, 1908, at Vancouver, Wash., said Bullock corruptly induced and persuaded and caused one John E. Baxter, Quartermaster of the United States Army, and the said Baxter did issue a certain check or warrant drawn upon the First National Bank of Portland, bearing date August 13, 1908, in favor of John J. Sesnon Company for the sum of $53,878.50, which warrant was subscribed by said Baxter as Quartermaster and was for funds and moneys of the United States then and there deposited and in the said First National Bank; (4) that on September 1, 1908, at Seattle, Wash., said Bullock knowingly, unlawfully, and corruptly induced, persuaded, and caused Frank A. Kane as agent of said John J. Sesnon Company to, and the said Frank A. Kane then and there did, indorse and negotiate said check or warrant, which check or warrant was thereafter, and on September 2, 1908, duly paid by the First National Bank of Portland, Or., out of the aforesaid funds of the United States.

Samuel H. Piles, James B. Howe, Charles H. Farrell, James H. Kane, and Wickliffe B. Stratton, all of Seattle, Wash., for plaintiff in error Houston.

O. L. Willett and Frank Oleson, both of Seattle, Wash., for plaintiff in error Bullock.

B. D. Townsend, of Washington, D. C., and Glenn E. Husted, and F. C. Rabb, both of Portland, Or., Special Asst. Atty. Gen., for the United States.

Before GILBERT and ROSS, Circuit Judges, and WOLVERTON, District Judge.

GILBERT, Circuit Judge (after stating the facts as above). [1] The indictment charges that the conspiracy was entered into on April 1, 1908, and that it has at all times since that date been "furthered and continued in force" by each of said conspirators. Four overt acts are alleged to have been done in August and September, 1908. The substance of the objections to the indictment is that it contains no allegation that bids were ever actually interposed by the conspirators, or what such bids were, that the crime could not be completed without the initial overt act of interposing bids by the cooperation of the conspirators, and that all overt acts must be alleged. We find no merit in these objections.

[6] Under section 5440, the offense consists of the unlawful scheme upon which the minds of the conspirators have met, together with an act to effect the object of the conspiracy. The allegation that a single act was done by one of the conspirators, which had for its purpose the

furtherance of the unlawful scheme, completes the allegation of the offense, and the rule is well settled that it need not appear upon the face of the indictment that the overt act was such that it could be seen to have a necessary or logical relation to the conspiracy charged. It is enough if the indictment allege that it has that effect. In brief, it is sufficient to state the overt act without alleging the manner in which it tended to effect the purposes contemplated. We so held in United States v. Benson, 70 Fed. 591, 17 C. C. A. 293, following United States v. Sanche (C. C.) 7 Fed. 715, United States v. Donau, 11 Blatchf. 168, Fed. Cas. No. 14,983, and the same has been held in Gantt v. United States, 108 Fed. 61, 47 C. C. A. 210, and United States v. Shevlin (D. C.) 212 Fed. 343, and we find no decision to the contrary.

But it is said that by the decision of the Supreme Court in Hyde v. United States, 225 U. S. 347, 32 Sup. Ct. 793, 56 L. Ed. 1114, Ann. Cas. 1914A, 614, a new rule of pleading has been educed, that, inasmuch as it was held in that case that the offense defined in section 5440 is not complete until an overt act is done to carry out the purpose of the conspiracy, the averments by which the overt act is pleaded must upon their face show that the act was so related to the conspiracy as necessarily to be a portion thereof. We do not so understand that decision. The court was there dealing with the question whether an overt act performed in one district by one of the parties who had conspired in another district would give jurisdiction to the court in the district where the overt act was performed as to all the conspirators. It was held that, under section 5440, an overt act was necessary to complete the offense. No new rule of pleading was announced, and it does not follow from any principle there affirmed that an indictment in a conspiracy case which would be good and valid before that decision should now be held defective. Under a rule of pleading such as is now contended to have been established by that case, the very indictment which in that case the court sustained would have been subject to objection on the very ground that is here urged. For that indictment contained no allegation which showed that the overt acts pleaded therein would tend to effect the object of the conspiracy. In the opinion the court said:

> "The powers of the Land Office were necessarily to be invoked and proceedings therein instituted and prosecuted by acts innocent indeed of themselves, taking only criminal taint from the purpose for which they were done."

In that case the indictment charged conspiracy to defraud the United States of public lands in lieu of lands within forest reserves established in Oregon and California, by means of false and fraudulent proofs, whereby the conspirators were to obtain fraudulently from those states title to and possession of school lands within the limits of such reserves, which were open to purchase from those states by residents thereof upon appropriate applications supported by affidavit showing the resident's qualifications to make such purchase, and his intention to purchase in good faith for his own benefit, and that he had made no

contract to sell the claim, the applications to be made in the names of fictitious persons and in the names of persons not really desiring or qualified to purchase said lands, the names of the latter class to be procured by paying or causing to be paid to them small sums of money and by falsely representing or causing to be represented to some of them that they were merely disposing of their rights to purchase such school lands. In the opinion it is said:

"Most of the overt acts charged consisted in the filing in the General Land Office by Dimond, as attorney for Hyde, his appearance in different selection cases, in some of which he urges and sets forth the reasons for favoring a speedy action. In counts 35 to 40, both inclusive, the overt act charged is the payment of money by Benson to either Valk or Harlan, alleged in the indictment to be salaried officials of the General Land Office and charged with duties pertaining to the exchange of lands of private claim or ownership included in a forest reserve or other public land. Two overt acts are charged against Hyde, one of which was committed on July 29, 1903, by causing to be transmitted by mail from the United States Land Office at Vancouver to the Commissioner of the General Land Office at Washington a written notification to the Commissioner, signed by Hyde for C. W. Clarke, that the latter appealed to the Secretary of the Interior from a certain decision of the Commissioner, with an assignment of errors, and the second of which was that Hyde, on March 31, 1902, caused to be presented by the hand of Dimond a paper signed by him, Hyde, notifying the Commissioner that one S. E. Kieffer was authorized and appointed as Hyde's agent to post notices in the ground described in a certain application and to make affidavit of posting."

Nor is the indictment defective for its failure to describe in detail the means by which the object of the conspiracy was to be attained. It was not necessary to allege what the bids were, or that they were actually made. The bids were but a portion of the means whereby the unlawful purpose was to be accomplished. The indictment charges, not that the object of the conspiracy was to interpose collusive and fraudulent bids, but that it was to defraud the United States of the money that should be paid as the purchase price of coal. It is enough if such an indictment contain a general description of the means. Crawford v. United States, 212 U. S. 183, 192, 29 Sup. Ct. 260, 53 L. Ed. 465, 15 Ann. Cas. 392; Dealy v. United States, 152 U. S. 539, 543, 14 Sup. Ct. 680, 38 L. Ed. 545. And a general allegation of the continuance of the conspiracy is an averment of a substantive fact and is sufficient. Dealy v. United States, supra; United States v. Barber, 219 U. S. 72, 78, 31 Sup. Ct. 209, 55 L. Ed. 99.

We think that the averments of the indictment were sufficient to advise the defendants of the nature of the offense with which they were charged, and as to which they were required to prepare their defense, and sufficient to sustain a plea of former conviction or acquittal in a case of a second indictment for the same offense. Said the court in Cochran & Sayre v. United States, 157 U. S. 286, 290, 15 Sup. Ct. 628, 630 (39 L. Ed. 704):

"But the true test is, not whether it might possibly have been made more certain, but whether it contains every element of the offense intended to be charged, and sufficiently apprises the defendant of what he must be prepared to meet, and, in case any other proceedings are taken against him for a similar

offense, whether the record shows with accuracy to what extent he may plead a former acquittal or conviction."

In Williamson v. United States, 207 U. S. 425, 28 Sup. Ct. 163, 52 L. Ed. 278, it was held that an indictment charging the accused with a conspiracy to commit the crime of subornation of perjury in proceedings for the purchase of public lands was sufficient, although the precise persons to be suborned and the elements essential to the commission of the crimes were not particularized.

Error is assigned to the admission in evidence of the statement made by Jarvis to Douglas, in March or April, 1909, that the $6,892 payment made to him by Houston was "the rake-off on the government coal contract." It is said that this evidence was inadmissible, because the statement was made after the object of the conspiracy had been completely consummated. To this it is to be said that it does not appear that the conspiracy had been consummated at that date. There was evidence of acts done in carrying it out as late as May 8, 1909. Again, the statement was made during the time the second object of the conspiracy was being effected. It was admissable to show that Jarvis was a member of the conspiracy, and it was for that purpose that it was admitted. As to that evidence, the court charged the jury that, before they could consider the statement of Jarvis as being the statement or act of the other defendants, it must have been made or done during the life of the conspiracy, and it must have been a statement or act in furtherance of, and to effect the object of, the conspiracy, and that, if the conspiracy was consummated and completed before that date, nothing that Jarvis said could affect either of the defendants.

[2] We find no error in the admission of evidence of the acts of the corporations of which the defendants were officers, under an indictment which charged the defendants as individuals. The evidence so admitted was that the conspirators interposed bids in the name of their respective corporations, and signed them as officers of the corporation. The indictment did not charge that the bids were to be signed by the individuals. It charged that the scheme of the conspiracy was to be carried out by fraudulent and collusive bids without stating what names were to be subscribed thereto, and it charged that the fruits of the conspiracy were to accrue to the defendants "or to the corporations represented by them." When Bullock signed the bids in the name of Sesnon Company, by himself as secretary, he committed an act within the allegations of the indictment, and proof thereof was properly admitted.

[3] It is contended that it was error to admit in evidence a letter addressed by Bullock to the Dexter Horton National Bank, authorizing Frank A. Kane to sign checks on behalf of the John J. Sesnon Company. The objection made to the letter was that it was immaterial and not included in the indictment. It is now urged that the letter was subject to objection because it did not authorize Kane to indorse checks payable to the Sesnon Company, but only to sign checks issued by that company. The testimony of the teller of the bank was that the letter was authority to Kane to indorse or sign checks or other

negotiable papers for the Sesnon Company. Kane, who was called as a witness did not in fact deny that he had authority to indorse such checks. He said that during June, July, August, September, and October of 1907 and 1908, he indorsed the checks payable to the Sesnon Company, that arrived at the Seattle office. When asked under whose authority he did so, he answered that he could not say that he ever had any authority for doing it. "It was just a custom," and he testified that in the winter months he did it under Bullock's supervision, and that in the summer months, in Bullock's absence, he continued to indorse them as before. We think the letter was properly admitted as tending to corroborate the evidence that Bullock authorized Kane to indorse the checks. The checks in question were drawn in favor of the John J. Sesnon Company, and were indorsed "John J. Sesnon Company by Frank A. Kane, Agt."

[4] We find no error in the assignment that evidence was admitted of overt acts other than those which were pleaded in the indictment. No decision of a federal court is cited in which it has been held that in such a case the prosecution is limited to proof of the overt acts which are specifically charged. The contrary has been held in United States v. Howell (D. C.) 56 Fed. 21; United States v. Burkett (D. C.) 150 Fed. 208; and United States v. Eccles (C. C.) 181 Fed. 906. In Bannon & Mulkey v. United States, 156 U. S. 464, 469, 15 Sup. Ct. 467, 469 (39 L. Ed. 494), the court said:

> "To require an overt act to be proven against every member of the conspiracy, or a distinct act connecting him with the combination to be alleged, would not only be an innovation upon established principles, but would render most prosecutions for the offense nugatory. It is never necessary to set forth matters of evidence in an indictment."

In Heike v. United States, 227 U. S. 131, 145, 33 Sup. Ct. 226, 229 (57 L. Ed. 450) the court said:

> "Another objection to evidence concerned the admission of testimony that the same course of conduct was going on long before the date in the indictment when it is alleged that the defendants conspired. The indictment, of course, charged a conspiracy not barred by the statute of limitations, but it was permissible to prove that the course of fraud was entered on long before and kept up."

At common law and in the absence of statutory changes thereof, it is not necessary to plead any overt act, but all overt acts may be shown in evidence as tending to prove the conspiracy, and its object. State v. Stockford, 77 Conn. 227, 58 Atl. 769, 107 Am. St. Rep. 28; State v. Mayberry, 48 Me. 218; Ochs et al. v. People, 124 Ill. 399, 16 N. E. 662; People v. Brickner, 15 N. Y. Supp. 528. The language of section 5440 indicates that Congress did not intend to change the common-law rule further than to make it essential to the offense described therein that there should have been at least one overt act to effect the object of the conspiracy.

There are other assignments of error as to the admission of evidence. We do not deem it necessary to discuss them. We find no error in any of them.

Error is assigned to the refusal of the court to direct a verdict for the defendants at the close of the testimony. One of the grounds of the motion was the insufficiency of the evidence to sustain a verdict against the defendants. We have carefully considered the evidence, and we think the court was fully justified in submitting the case to the jury.

[5] Another ground of the motion was that the prosecution of the offense charged was barred by the statute of limitations. It is urged that the statute commenced to run on April 21, 1908, the date when the contracts were let for furnishing the coal for Forts Davis and St. Michaels, or that, at the latest, the statute began to run on July 13, 1908, the date when Bullock certified to the vouchers. The object of the conspiracy was alleged to be to defraud the United States, and there was proof of acts done by the defendants, which showed that the purpose of the conspiracy was not fully consummated when the vouchers were certified to. That act was followed by others. On August 13, 1908, at the instance of Bullock, Baxter issued the checks; on September 1st, Kane, under authority from Bullock, indorsed the checks on behalf of John J. Sesnon Company; and on September 2d, the bank paid the checks. The indictment was found on August 12, 1911. Where the conspiracy was formed more than three years prior to the indictment, and acts in pursuance thereof have been done, both prior to and within the three years, prosecution is not barred, for the conspiracy may be a continuing offense, and it may be alleged and proven that it was continued in force and operation to a time within the statutory period of limitation. It was so held by this court in Hedderly v. United States, 193 Fed. 561, 569, 114 C. C. A. 227, in accordance with the very decided weight of authority, and that rule has been finally approved and settled by the decision in United States v. Kissel, 218 U. S. 601, 31 Sup. Ct. 124, 54 L. Ed. 1168.

We find no error for which the judgment should be reversed. It is, accordingly, affirmed.

ROSS, Circuit Judge (dissenting). The indictment against the plaintiffs in error was based on section 5440 of the Revised Statutes as amended May 17, 1879 (21 Stats. p. 4), which reads:

> "If two or more persons conspire either to commit any offense against the United States, or to defraud the United States in any manner or for any purpose, and one or more of such parties do any act to effect the object of the conspiracy all the parties to such conspiracy shall be liable to a penalty of not more than ten thousand dollars, or to imprisonment for not more than two years or to both fine and imprisonment in the discretion of the court."

Another provision of the Revised Statutes requires prosecution of such offenses to be commenced within three years. The indictment was filed August 12, 1911; objection to its sufficiency, as well as to the time of its presentation, being appropriately taken by the plaintiffs in error.

In respect to the crime denounced by section 5440, the Supreme Court, in the late case of Hyde v. United States, 225 U. S. 347, at page

357, 32 Sup. Ct. 793, at page 798 (56 L. Ed. 1114, Ann. Cas. 1914A, 614), which was a prosecution based upon the same statute, said:

"It is contended by the defendants that the conspiracy—the union in an unlawful purpose—constitutes the crime, and that the requirement of an overt act does not give the offense criminal quality or extent, but that the provision of the statute in regard to such act merely affords an opportunity to withdraw from the design without incurring its criminality (called in the cases a locus penitentiæ). The following, among other cases, are cited in support of this view: United States v. Britton, 108 U. S. 199, 204 [2 Sup. Ct. 531, 27 L. Ed. 698]; Pettibone v. United States, 148 U. S. 197, 203 [13 Sup. Ct. 542, 37 L. Ed. 419]; Dealy v. United States, 152 U. S. 539, 547 [14 Sup. Ct. 680, 38 L. Ed. 545]; Bannon v. United States, 156 U. S. 464–468–469 [15 Sup. Ct. 467, 39 L. Ed. 494]; and the opinion of this court when this case was here before [Hyde v. Shine], 199 U. S. 62–76 [25 Sup. Ct. 760, 50 L. Ed. 90].

"It must be conceded at the outset that there is language in those cases that, considered by itself, justifies the contention based upon them. In the United States v. Britton, for instance—and the language of the case is resorted to for the genesis of the doctrine and makes strongest for the contention—Mr. Justice Woods, speaking for the court, said: 'The offense charged in the counts of this indictment is a conspiracy. This offense does not consist of both the conspiracy and the acts done to effect the object of the conspiracy, but of the conspiracy alone. The provision of the statute, that there must be an act done to effect the object of the conspiracy, merely affords a locus penitentiæ, so that before the act is done either one or all of the parties may abandon their design, and thus avoid the penalty prescribed by the statute. It follows as a rule of criminal pleading that in an indictment for conspiracy under section 5440, the conspiracy must be sufficiently charged, and that it cannot be aided by the averments of acts done by one or more of the conspirators in furtherance of the object of the conspiracy. Reg. v. King, 7 Q. B. 782; Commonwealth v. Shedd, 7 Cush. [Mass.] 514.'

"The case was followed in Pettibone v. United States to the effect 'that the conspiracy must be sufficiently charged, and cannot be aided by averments of acts done by any one or more of the conspirators in furthering the object of the conspiracy.'

"In Dealy v. United States it is said that: 'The gist of the offense is the conspiracy. * * * Hence, if the conspiracy was entered into within the limits of the United States and the jurisdiction of the court, the crime was then complete, and the subsequent overt act in pursuance thereof may have been done anywhere.'

"Indeed, it must be said that the cases abound with statements that the conspiracy is the 'gist' of the offense or the 'gravamen' of it, and we realize the strength of the argument based upon them. But we think the argument insists too exactly on the ancient law of conspiracy, and does not give effect to the change made in it by section 5440, supra. It is true that the conspiracy, the unlawful combination, has been said to be the crime, and that at common law it was not necessary to aver or prove an overt act; but section 5440 has gone beyond such rigid abstraction and prescribes, as necessary to the offense, not only the unlawful conspiracy, but that one or more of the parties must do an 'act to effect' its object, and provides that when such an act is done 'all the parties to such conspiracy' become liable. Interpreting the provision, it was decided in Hyde v. Shine, 199 U. S. 62. 76 [25 Sup. Ct. 760, 50 L. Ed. 90], that an overt act is necessary to complete the offense. And so it was said in United States v. Hirsch, 100 U. S. 33 [25 L. Ed. 539], recognizing that while the combination of minds in an unlawful purpose was the foundation of the offense, an overt act was necessary to complete it. It seems like a contradiction to say that a thing is necessary to complete another thing, and yet that other thing is complete without it. It seems like a paradox to say that anything, to quote the Solicitor General, 'can be a crime of which no court can take cognizance.' The conspiracy, therefore, cannot alone constitute the offense. It needs the addition of the overt act. Such act is something

more, therefore, than evidence of a conspiracy. It constitutes the execution or part execution of the conspiracy and all incur guilt by it, or rather complete their guilt by it, consummating a crime by it cognizable then by the judicial tribunals, such tribunals only then acquiring jurisdiction."

It is there, as I understand it, in effect held, contrary to previous decisions of that court as well as of other federal courts, that in order to constitute a crime under the provisions of section 5440 of the Revised Statutes, an overt act or acts is essential. That being so, it cannot admit of doubt that the indictment must allege such overt act or acts, for it is a cardinal rule of criminal pleading that everything made essential to constitute the crime must be alleged.

Turning to the indictment, we find what the conspirators agreed to do thus stated:

"That on or about the 1st day of April, in the year of our Lord one thousand nine hundred and eight, at Seattle, in the county of King, state of Washington, and within the jurisdiction of this court, one Charles E. Houston, late of said county of King, and one John H. Bullock, formerly of said county of King, but late of the county of Multnomah, in the state of Oregon, and one D. H. Jarvis (now deceased) and others to the grand jury unknown, did willfully, knowingly, and unlawfully and feloniously conspire, combine, confederate and agree together to defraud the United States of America of divers large sums of money, and further to defraud the said United States of its legal remedies to recover the moneys of which it was to be defrauded as aforesaid, and further to defraud and deceive the officers of the said United States having authority in the premises in the discharge of their official duties with reference to the several transactions hereinbefore set forth, and further to defraud the said United States of the governmental and other benefits that would have resulted from honest and competitive bids and proposals to contract for the furnishing and sale to said United States of coal as hereinafter set forth.

"The subject-matter of said unlawful conspiracy, the objects thereof, and the means by which said objects were to be effected are as follows, to wit:

"On or about the 10th day of March, A. D. 1908, the said United States, acting through the Chief Quartermaster for the Department of the Columbia of the United States Army, published and circulated an advertisement inviting bids and proposals to contract for the furnishing and sale to said United States of certain large quantities of coal, which the said United States desired to purchase for governmental use during the fiscal year commencing July 1, 1908, and ending June 30, 1909, at those certain military posts known as Fort Davis, Fort St. Michael and Fort Liscum, all situated in the District of Alaska, which said bids and proposals to contract were to be submitted to the said Chief Quartermaster for the Department of the Columbia on the 10th day of April, A. D. 1908.

"The principal object of said unlawful conspiracy was to induce the said United States, acting through its duly authorized officers, to award and let contracts for the purchase of said coal, and to purchase and pay for said coal, at grossly exorbitant and fraudulent prices, whereby the said United States should be defrauded of large sums of money for the use and benefit of said conspirators, or some of them, or certain corporations then and there represented by said conspirators respectively; which said object was to be effected and consummated by means of collusive, fraudulent and dishonest bids and proposals to contract for the furnishing of said coal, which said bids and proposals to contract should be ostensibly competitive, but in fact collusive, dishonest and noncompetitive and for grossly exorbitant prices to be secretly agreed upon by said conspirators and communicated to one another prior to the making of said bids and proposals to contract.

"It was also one of the objects of said unlawful conspiracy, that after the said United States should have been defrauded in the manner and by the

means hereinbefore set forth, the true facts in the premises should be concealed from the said United States, whereby the said United States should be defrauded of its legal remedies to recover the moneys of which it should have been defrauded as aforesaid, and should be defrauded of all legal redress in the premises, which said last named object of said unlawful conspiracy was to be effected and consummated by means of false, fraudulent, fictitious and collusive checks, vouchers, and entries in books of account relating to the disbursement and use by said conspirators of the moneys of which the United States was to be defrauded as aforesaid.

"Which said unlawful conspiracy has at all times since said first day of April, A. D. 1908, been furthered and continued in force by each of said conspirators, except as to said D. H. Jarvis since the date of his decease on or about June 22, A. D. 1911."

Notwithstanding the foregoing averments in respect to the alleged agreement of the alleged conspirators, the indictment contains not one line or word to the effect that the said alleged conspirators or either of them directly or indirectly ever made any bid or proposal through the Chief Quartermaster of the United States Army of the Department of the Columbia, or otherwise, for the furnishing or sale to the United States of any coal which it desired to purchase for governmental use during the fiscal year commencing July 1, 1908, and ending June 30, 1909, at the military posts known as Ft. Davis, Ft. St. Michael, and Ft. Liscum, or for any other purpose, or at all; and as a necessary consequence the indictment contains no charge that the said conspirators or either of them directly or indirectly made to the United States through its said Quartermaster or otherwise, any collusive, fraudulent, or dishonest bid or proposal to contract for the furnishing of any coal, or that they or either of them ever made to the United States through its Quartermaster or otherwise any bid or proposal of any nature or character. Yet, as has been seen, it is expressly alleged that the subject-matter of the alleged conspiracy, its objects, and the means by which those objects were to be effected, consisted in inducing the United States through its authorized officers to award and let contracts for the purchase of certain coal for which it had previously asked bids through its Chief Quartermaster for the Department of the Columbia, at grossly exorbitant and fraudulent prices, whereby the government would be defrauded of large sums of money for the benefit of the alleged conspirators or those for whom they were acting, all of which was to be effected and consummated by means of collusive, fraudulent, and dishonest bids and proposals to contract for the furnishing of the coal, at grossly exorbitant prices to be secretly agreed upon by the alleged conspirators prior to the making of such bids and proposals.

The indictment does charge that, after the formation of the alleged unlawful conspiracy, and during its continuance, and to effect its object:

"The said John H. Bullock, on, to wit, the 13th day of August, A. D. 1908, at Vancouver in said Western District of Washington and within the jurisdiction of this court, did knowingly, unlawfully and corruptly induce, persuade and cause one John E. Baxter as Quartermaster of the United States Army to issue, and the said John E. Baxter did issue a certain check or warrant drawn upon the First National Bank of Portland, Oregon, bearing date of said 13th day of August, 1908, in favor of 'John J. Sesnon Co.' for the

sum of thirty-nine thousand one hundred and sixty-three and 50/100 ($39,-163.50) dollars, and which said check or warrant was subscribed by said John E. Baxter as Quarter (master) of the United States Army, and which said check or warrant was for funds and money of the said United States then and there on deposit in said First National Bank of Portland, Oregon." And

"That after the formation of said unlawful conspiracy and during the continuance thereof, and to effect the object thereof, the said John H. Bullock, on, to wit, the 1st day of September, A. D. 1908, at Seattle in said Western District of Washington, and within the jurisdiction of this court, did knowingly, unlawfully, and corruptly induce, persuade and cause one Frank A. Kane, as agent of said John J. Sesnon Co., to, and said Frank A. Kane then and there did endorse and negotiate said check or warrant last herein described, and which said check or warrant was thereafter and on the 2d day of September, 1908, duly paid by said First National Bank of Portland, Oregon, out of the aforesaid funds of said United States." And

"That after the formation of said unlawful conspiracy and during the continuance thereof, and to effect the object thereof, the said John H. Bullock, on, to wit, the 13th day of August, A. D. 1908, at Vancouver, in said Western District of Washington and within the jurisdiction of this court, did knowingly, unlawfully and corruptly induce, persuade and cause one John E. Baxter, as Quartermaster of the United States Army, to, and the said John E. Baxter did issue a certain check or warrant drawn upon the First National Bank of Portland, Oregon, bearing date the said 13th day of August, 1908, in favor of 'John J. Sesnon Co.' for the sum of fifty-three thousand eight hundred and seventy-eight and 50/100 ($53,878.50) dollars, and which said check or warrant was subscribed by said John E. Baxter as Quartermaster of the United States Army, and which said check or warrant was for funds and money of the said United States then and there on deposit in said First National Bank of Portland, Oregon." And

"That after the formation of said unlawful conspiracy and during the continuance thereof, and to effect the object thereof, the said John H. Bullock, on, to wit, the 1st day of September, A. D. 1908, at Seattle, in said Western District of Washington, and within the jurisdiction of this court, did knowingly, unlawfully, and corruptly induce, persuade and cause one Frank A. Kane, as agent of said John J. Sesnon Co., to, and said Frank A. Kane then and there did indorse and negotiate said check or warrant last herein described, and which said check or warrant was thereafter and on the 2d day of September, 1908, duly paid by said First National Bank of Portland, Oregon, out of the aforesaid funds of said United States."

But the indictment does not charge that the check or warrant therein referred to had any connection with any bid or proposal by the alleged conspirators for the sale to or purchase by the United States of any coal at exorbitant prices by means of pretended and fraudulent competitive bids, or otherwise. It will not do to indulge in any inferences in respect to that matter in considering the question of the sufficiency of the indictment, for, as already said, a cardinal rule in criminal proceedings is that the indictment must state every ultimate fact made essential by law to the constitution of the crime denounced. The present indictment was undoubtedly drawn with the manifest purpose, as I think, of avoiding the bar of the statute of limitations; for, as has been shown, notwithstanding the fact that it makes no mention whatever of the making of any bid or proposal by or on behalf of the alleged conspirators or either of them for furnishing and selling to the government any coal in response to the advertisement of its Quartermaster, or otherwise, yet on the trial the government introduced evidence not only that the defendants did make such bids for the furnishing and sale to it of the coal advertised for, at exorbitant prices,

but that such bids and proposals, while nominally competitive, were really fraudulent and made pursuant to the agreement of the defendants thus to defraud the United States. And such proof was deemed by the jury so conclusive as to result in a verdict of guilty against the appellants. To such proof they objected upon the ground, among other grounds, that it was barred by the three-year statute of limitations. The government deemed it necessary to prove that the alleged conspirators did make the collusive and fraudulent bids and proposals in response to the advertisement of the Quartermaster, as it undoubtedly was, for the reason that not only was the making of such collusive and fraudulent bids and proposals one of the essential elements of the crime undertaken to be charged, but, according to the express declaration of the indictment itself, "the principal object" of it. It being necessary to prove the fact of the making of such collusive and fraudulent bids and proposals, it was, upon well-settled principles, necessary to allege the making of them. To have done so, however, the indictment would have shown upon its face that the conspiracy alleged to have been entered into was consummated more than three years before the filing of the indictment, and, consequently, barred by the statute of limitations.

In one of the briefs filed by counsel on behalf of the government, it is said:

"The principal objection urged against the indictment in the present case is that the interposing of two or more bids was an indispensable step in the execution of the conspiracy, without which the overt acts alleged in the indictment could not have tended to effect the object of the conspiracy; this objection being based upon the general proposition that an indictment for conspiracy under section 5440, R. S., must allege the commission of all indispensable overt acts from the inception of the conspiracy down to the last overt act alleged in the indictment.

"The decision of this court in Chaplin v. United States, 193 Fed. 879, 114 C. C. A. 93, is conclusive upon this proposition. The same question was raised, considered, and decided; and the decision was squarely against the contention raised there, and which is renewed in the present case. * * * The contention urged in the Chaplin Case was identical in principle with the contention urged in the present case."

How mistaken counsel are in this contention will be readily seen by reference to the case of Chaplin v. United States and remembering the change wrought in the law in respect to the crime defined by section 5440 of the Revised Statutes by the decision of the Supreme Court in the case of Hyde v. United States, supra. The Chaplin Case arose under the Desert Land Act, one of the provisions of which declares:

"That it shall be lawful for any citizen of the United States, or any person of requisite age who may be entitled to become a citizen, and who has filed his declaration to become such, and upon payment of twenty-five cents per acre to file a declaration under oath with the register and receiver of the land district in which any desert land is situated, that he intends to reclaim a tract of desert land. * * *"

The court in its opinion said (193 Fed. 881, 114 C. C. A. 95):

"The question presented to this court is whether the indictment charges the commission of a crime. The contention of the plaintiffs in error is that, inasmuch as an entryman of land under the desert land acts has the right to assign his entry as soon as it is made, the plaintiffs in error committed no

crime in conspiring to induce an entryman to make an entry when he had the actual present intention to assign his right to another; that the entryman has the right to make an entry with the intention to assign; that the land office has no right to exact from him an affidavit which renounces such right; that, if it does exact such an affidavit, the entryman does not commit perjury in making it, and the entry which he makes is legal, no matter what his intention may be."

In considering the validity of the indictment in that case, which was for alleged conspiracy, the court said:

"It is contended that the indictment is fatally defective for failure to allege that the defendants accused therein ever caused any fraudulent entries to be made, or ever took any steps or did any act to that end. But it was not necessary to allege that such entries were in fact ever made. The offense charged was a conspiracy to defraud the United States. The nature and object of the conspiracy, and the means whereby the conspirators intended to carry out their scheme, were set forth. The offense was complete when the unlawful conspiracy was formed and the plans were adopted. There remained, however, a locus penitentiæ until something more was done. Instead of abandoning their conspiracy, the indictment alleges that the conspirators performed certain overt acts. In the counts on which the plaintiffs in error were found guilty, they were charged with making certain false and fraudulent affidavits of expenditures which were sworn to have been made on desert land entries within the first year after the date thereof, which affidavits were set forth and were alleged to have been sworn to before the receiver of the land office, and they contained the jurat and the signature of such officer. These overt acts were within the scope of the conspiracy as charged, and they tended to accomplish its object. In United States v. Britton, 108 U. S. 199, 2 Sup. Ct. 531, 27 L. Ed. 698, it was said: 'The offense charged in the counts of this indictment is a conspiracy. This offense does not consist of both the conspiracy and the acts done to effect the object of the conspiracy, but of the conspiracy alone.'"

As will be seen, the court there held that "the offense was complete when the unlawful conspiracy was formed and the plans were adopted." Such was undoubtedly the law at the time of the rendition of that decision; but, as has been seen from the decision of the Supreme Court in the case of Hyde v. United States, supra, such is no longer the law.

Another consideration which renders the decision of this court in the case of Chaplin v. United States wholly inapplicable to the present case is that neither of the overt acts alleged in the indictment in the present case had, in so far as the indictment shows, any connection whatever with the making by the alleged conspirators of any bid or proposal of any character for the furnishing and selling to the government of any coal pursuant to the advertisement of its Quartermaster, or otherwise.

For the reasons stated I am of the opinion that the judgment should be reversed and the cause remanded, with directions to the court below to sustain the demurrer to the indictment.

(217 Fed. 866)

SCHWARTZ v. UNITED STATES.

(Circuit Court of Appeals, Fourth Circuit. September 8, 1914.)

No. 1255.

1. CONTEMPT (§ 54*)—PROCEEDINGS FOR PUNISHMENT—FORMAL REQUISITES.
There is no fixed formula for contempt proceedings, and technical accuracy is not required. It is sufficient if the offense is set out so that the defendant is clearly informed of the charges against him, and whether a criminal or civil contempt is alleged; and this is to be determined by examination of the entire record.

[Ed. Note.—For other cases, see Contempt, Cent. Dig. §§ 143–149; Dec. Dig. § 54.*]

2. INJUNCTION (§ 230*)—VIOLATION—CONTEMPT—JURISDICTION AND POWER OF COURT.
Where, in a civil suit of which the court had jurisdiction, charges of contempt were made against defendant for violation of an injunction issued therein, and he appeared and pleaded, and, after the proceeding had been transferred to the criminal docket, procured a suspension of the proceeding on his voluntary promise to obey the injunction, he cannot attack a subsequent judgment for contempt against him in the criminal proceeding, after a hearing, on the ground of the invalidity of the injunction order.

[Ed. Note.—For other cases, see Injunction, Cent. Dig. §§ 502–516; Dec. Dig. § 230.*]

3. CONTEMPT (§ 66*)—CRIMINAL PROCEEDINGS—REVIEW IN APPELLATE COURT.
While, in a case of criminal contempt, the trial court must be convinced of the guilt of the accused beyond a reasonable doubt, a finding of such fact, supported by competent evidence, cannot be reviewed by an appellate court.

[Ed. Note.—For other cases, see Contempt, Cent. Dig. §§ 213–215, 223–237; Dec. Dig. § 66.*]

4. CRIMINAL LAW (§ 304*)—CRIMINAL CONTEMPT—EVIDENCE.
A proceeding for criminal contempt growing out of a civil suit is collateral to it, and the court may take judicial notice in the trial of the contempt proceeding of all orders made in the civil cause.

[Ed. Note.—For other cases, see Criminal Law, Cent. Dig. §§ 700–717, 2951½; Dec. Dig. § 304.*]

In Error to the District Court of the United States for the Northern District of West Virginia, at Philippi; Alston G. Dayton, Judge.

Proceeding for criminal contempt in the name of the United States against Meyer Schwartz. From a judgment of conviction, defendant brings error. Affirmed.

Joseph R. Curl and John C. Palmer, Jr., both of Wheeling, W. Va. (A. M. Belcher, of Charleston, W. Va., on the brief), for plaintiff in error.

Stuart W. Walker, U. S. Atty., of Martinsburg, W. Va., and John A. Howard, of Wheeling, W. Va., for the United States.

Before PRITCHARD and WOODS, Circuit Judges.

*For other cases see same topic & § NUMBER in Dec. & Am. Digs. 1907 to date, & Rep'r Indexes

WOODS, Circuit Judge. The question to be decided in this cause is whether the assignments of error present any valid reason for the reversal of a judgment of the District Court by which Meyer Schwartz was held to be guilty of contempt and sentenced to imprisonment for 60 days.

In the case of West Virginia-Pittsburg Coal Co. v. John P. White and others the District Judge granted a temporary restraining order, dated September 29, 1913, directed to the defendants, as officers of the United Mine Workers of America and as individuals, "and all persons combining and conspiring with the said designated persons and all other persons whomsoever." The tenor of the order was to enjoin interference with plaintiff's business by using threats, force, intimidation, or persuasion to induce its employés to break their contracts or leave their work, or by using like means to induce any person to refuse to accept employment with plaintiff, and to enjoin trespassing on plaintiff's premises for the purposes above indicated. The charge against Schwartz seems to fall under the italicized portion of the following provision of the order:

"From interfering in any manner whatsoever, either by threats, violence, intimidation, persuasion, or entreaty, with any person in the employ of plaintiff who has contracted with and is in the actual service of plaintiff, to entice or induce him to quit the service of plaintiff, or to fail or refuse to perform his duties under his contract of employment, and *from ordering, aiding, directing, assisting, or abetting, in any manner whatsoever, any person or persons to commit any or either of the acts aforesaid.*"

By petition filed November 11, 1913, the plaintiff alleged:

"Meyer Schwartz, who keeps a store near your petitioner's Locust Grove mine, after being advised of the terms and provisions of the said restraining order, has continued to furnish a meeting place for your petitioner's striking employés and to assist in inducing your petitioner's striking employés to remain away from their work, in violation of their respective contracts of employment."

The affidavit of Virgin, attached to the petition as a part of it, alleges service of the order on Schwartz, his acts of furnishing a place for the striking miners to hold their meetings as near as possible to the mines, and of providing a conveyance and a driver for two of the officers of the United Mine Workers to go over the plaintiff's property to a meeting of the strikers.

A rule to show cause was issued, and the hearing fixed for December 1, 1913. On that day the court, on motion of plaintiff, made an order naming a number of persons, including Schwartz, who had appeared and submitted themselves to the court in response to the rule to show cause, and reciting its opinion that the petition and affidavits showed a criminal contempt, and directing that the proceedings be entitled "United States v. Van Bittner" and others, Meyer Schwartz being named as one of the defendants, that the cause be docketed on the law side of the court on the criminal docket, that the petition and affidavits and the orders relating to the contempt proceedings be filed as a part of the record in the criminal case, and that the contempt pro-

ceedings "shall not be further prosecuted in this suit in equity, but shall be prosecuted on the law side of the court as a criminal contempt case."

After hearing the arguments, the court on the following day made an order refusing to dismiss the bill, and granting a temporary injunction identical in language with that of the restraining order. At the same time an order was made staying further proceedings until the further order of the court.

By petition filed on January 17, 1914, West Virginia-Pittsburg Coal Company represented to the court, by petition and affidavits, that, although the defendants had appeared in open court on December 2, 1913, and promised to desist from the acts charged as contempt, and to comply strictly with the order of injunction, they nevertheless had continued to violate the order in many particulars set out. An attachment was issued against Schwartz, and he was required to show cause why he should not be punished for the alleged contempt. At the hearing on January 27, 1914, the court, after denying the motion of defendant's counsel to quash the petition, and after hearing the evidence, adjudged the defendant guilty of contempt and sentenced him to imprisonment for 60 days.

[1] Although out of logical order, for the sake of clearness, we consider first the error assigned that the charge against Schwartz should have been dismissed for indefiniteness. It is true that Schwartz is not specifically charged by name in this last petition and the affidavits attached; yet, reading them in connection with the first petition and the affidavits thereto attached, it appears that the only charge in the last petition which involves him is that of maintaining at petitioner's mine, near Colliers, tents occupied by a number of strike agitators who "live in the most disorderly manner, drinking, fighting, shooting, and disturbing your petitioner's employés who live near by." This definite charge is against all the defendants, and was notice to Schwartz of the accusation he had to meet.

But, aside from that, the original petition and affidavits, as we have pointed out, contained distinct and definite charges against him, and the order suspending his trial on these charges did not affect his liability to answer them. Under that order making the United States a party, transferring the cause to the criminal docket, and directing the original petition and affidavits to be filed in the criminal proceeding, the charges and specifications contained in the original papers stand against the defendant as the basis of the criminal proceedings. There is no fixed formula for contempt proceedings, and technical accuracy is not required. It is sufficient if the offense is set out, so that the defendant is clearly informed of the charges against him and whether a criminal or civil contempt is alleged; and this is to be determined by examination of the entire record. Gompers v. Bucks Stove & Range Co., 221 U. S. 418, 31 Sup. Ct. 492, 55 L. Ed. 797, 34 L. R. A. (N. S.) 874; Aaron v. United States, 155 Fed. 833, 84 C. C. A. 67; United States v. Huff (D. C.) 206 Fed. 700.

Objection was not made that Schwartz was not a party to the pro-

ceedings and was not bound by the order of injunction. On the contrary, the defendant appeared in the cause on December 1, 1913, and submitted himself to the jurisdiction of the court. Breach of a promise made to the court did not subject him to contempt proceedings; but the appearance and the promise precluded the defendant from averring that he was not a party bound by the order. Examination of the record excludes even the slightest doubt that the defendant was fully advised of the charge against him, appeared before the court and submitted himself to its order, and procured a suspension of the proceedings by a voluntary promise to obey the injunction. If the charge had been originally for civil contempt, all proceedings of that character were discontinued by the order, and the defendant was fully advised that he was called on to meet a charge of criminal contempt, and on that charge he was tried and fully heard. This being so, it would be not only adopting the extreme technicality formerly required in the criminal procedure, but extending it to the point of absurdity, to sustain the objections to the form and method of the procedure in this contempt case.

There is nothing in the record indicating that defendant's counsel made a motion to require the charges to be made more definite and certain, and hence there is no ground for the assignment of error on that point.

Neither the bill of exceptions nor the assignments of error point out what portion of the evidence should have been excluded as irrelevant. The first bill of exceptions is merely a copy of the evidence, and no objection to any of it appears to have been made. The assignment of error on this point has, therefore, no basis in the record.

[2] There is no force in the position that the judgment should be reversed because the court exceeded its power in adjudging the defendant guilty of contempt for furnishing a meeting place for organizers of the United Mine Workers of America and others, and thus aided them in inducing by force, threats, intimidation, and persuasion the employés of West Virginia-Pittsburg Coal Company to quit work. It is true that the judgment for contempt, as well as the order of injunction, will be set aside on writ of error, when the trial court had no jurisdiction to make the order of injunction. In re Rowland, 104 U. S. 604, 26 L. Ed. 861; In re Fisk, 113 U. S. 713, 5 Sup. Ct. 724, 28 L. Ed. 1117; In re Sawyer, 124 U. S. 200, 8 Sup. Ct. 482, 31 L. Ed. 402; United States v. Shipp, 203 U. S. 563, 27 Sup. Ct. 165, 51 L. Ed. 319, 8 Ann. Cas. 265. But that condition is not presented here. The court had jurisdiction of the subject-matter—the protection of the West Virginia-Pittsburg Coal Company in its property rights—and of the defendant, who had appeared in the cause to answer the charge that he had unlawfully interfered with those rights.

The defendant appeared in answer to a rule to show cause, pleaded not guilty of the contempt charged, and asked and obtained time to produce his witnesses, without questioning the power of the court to make the order. He, along with others, excepted to the order transferring the cause to the criminal docket and making the papers

the basis of a charge of criminal contempt; but, so far from prosecuting this exception, he waived it by appearing before the court, submitting himself to its order, and promising obedience, and thus procuring a suspension of the proceedings. Under these conditions it cannot be said by the defendant that the order of injunction and the order to show cause, acquiesced in by him and not appealed from, is a nullity, because it may have been erroneous in embracing acts which should not have been held to be unlawful aid to those who were charged with unlawful interference with the business of the West Virginia-Pittsburg Coal Company:

"If a party can make himself a judge of the validity of orders which have been issued, and by his own act of disobedience set them aside, then are the courts impotent, and what the Constitution now fittingly calls the 'judicial power of the United States' would be a mere mockery." Gompers v. Bucks Store & Range Co., 221 U. S. 418, 31 Sup. Ct. 492, 55 L. Ed. 797, 34 L. R. A. (N. S.) 874.

[3] The well-established principle is that in a case of criminal contempt the trial court must be convinced of the guilt of the accused beyond a reasonable doubt, but when there is evidence tending to show guilt the finding of fact by the trial court cannot be reviewed by this court. Bessette v. Conkey Co., 194 U. S. 338, 24 Sup. Ct 665, 48 L. Ed. 997. In this case there was evidence that the defendant rented his land to the officials of the United Mine Workers of America and others, who were taking means forbidden by the injunction to induce the employés of West Virginia-Pittsburg Coal Company to quit work, not only with the knowledge that it would be used, but with the purpose that it should be used, as a base for their operations. There was also evidence that he furnished conveyances to some of the same persons for a like purpose. This was evidence tending to show the "aiding and assisting" by the defendant which the court had forbidden.

[4] It is true that the record does not show that the stay order and the order of injunction were formally introduced in evidence; but throughout the taking of the testimony they were referred to by the witnesses, including the defendant, as if they had been introduced, and were so treated by counsel in the examination. Besides, it does not appear that the omission was made the basis of a motion to dismiss, or in any way called to the attention of the court. To reverse the judgment on this ground would be carrying technicality to the point of extreme attenuation. There is authority for the proposition that the criminal contempt is so far distinct from the original civil proceedings that the order of injunction must be formally introduced. State v. Hudson County Electric Co., 61 N. J. Law, 114, 38 Atl. 818. But we think this rule too technical. The better view is that, as one proceeding grows out of the other and is collateral to it, the court will take judicial notice in the trial of the latter of all orders made in the former. State v. Jones, 20 Wash. 576, 56 Pac. 369; State v. Thomas, 74 Kan. 360, 86 Pac. 499; State v. Porter, 76 Kan. 411, 91 Pac. 1073, 13 L. R. A. (N. S.) 462; Haaren v. Mould, 144 Iowa, 296, 122 N. W. 921, 24 L. R. A. (N. S.) 404.

The judgment against the defendant was suspended, and it was ordered that he be admitted to bail pending the disposition of the cause by this court. Hence there is no foundation for the assignment of error alleging that the suspension of the sentence and bail were denied.

This court in a unanimous opinion (John Mitchell et al. v. Hitchman Coal & Coke Co., 214 Fed. 685, 131 C. C. A. 425) has expressed its views fully on the limits to which an injunction of this sort should go. It was there held that it is an invasion of the rights of the citizen to enjoin the promotion of a labor union by persuasion and other peaceable and lawful means. Had this order of injunction been brought up for review by the defendant, it would have been modified in his behalf. But it is too late to allege before this court that the injunction was too broad when the defendant appeared in court to answer the charge of violating the injunction, and, instead of bringing the order up for review, waived all objections to it by submitting himself and promising obedience to it.

Affirmed

(217 Fed. 871)

SCORIC v. UNITED STATES.

(Circuit Court of Appeals, Fourth Circuit. September 8, 1914.)

No. 1256.

1. INJUNCTION (§ 230*)—VIOLATION—PROCEEDINGS FOR PUNISHMENT—SUFFICIENCY OF CHARGES.

Charges of criminal contempt in violating an injunction *held* sufficiently specific to sustain a judgment of conviction.

[Ed. Note.—For other cases, see Injunction, Cent. Dig. §§ 502-516; Dec. Dig. § 230.*]

2. INJUNCTION (§ 230*)—VIOLATION—PROCEEDINGS FOR PUNISHMENT—FORMAL REQUISITES.

The fact that through a clerical error the name of a defendant, charged with others with contempt for violation of an injunction, was omitted from an order entered on the petition transferring the proceeding to the criminal docket for trial, does not invalidate a judgment against him therein, where he appeared, pleaded, and contested the case.

[Ed. Note.—For other cases, see Injunction, Cent. Dig. §§ 502-516; Dec. Dig. § 230.*]

3. INJUNCTION (§ 231*)—VIOLATION—PROCEEDINGS FOR PUNISHMENT—REVIEW IN APPELLATE COURT.

The question of the validity of an order granting an injunction, not appealed from, cannot be raised in an appellate court on review of a subsequent judgment for contempt for violation of the injunction.

[Ed. Note.—For other cases, see Injunction, Cent. Dig. § 517; Dec. Dig. § 231.*]

In Error to the District Court of the United States for the Northern District of West Virginia, at Philippi; Alston G. Dayton, Judge.

---

*For other cases see same topic & § NUMBER in Dec. & Am. Digs. 1907 to date, & Rep'r Indexes

Proceedings for criminal contempt in the name of the United States against Paul Scoric. From a judgment of conviction, defendant brings error. Affirmed.

John C. Palmer, Jr., and Joseph R. Curl, both of Wheeling, W. Va. (A. M. Belcher, of Charleston, W. Va., on the brief), for plaintiff in error.

Stuart W. Walker, U. S. Atty., of Martinsburg, W. Va., and John A. Howard, of Wheeling, W. Va., for the United States.

Before PRITCHARD and WOODS, Circuit Judges.

WOODS, Circuit Judge. Most of the assigned errors of procedure, and in the judgment and sentence against the defendant for contempt by reason of his disobedience of an order of injunction of the District Court, have been discussed and disposed of by the opinion in the like case of Meyer Schwartz v. United States, 217 Fed. 866, 133 C. C. A. 576, filed herewith, involving the charge of contempt in disobedience of the same orders. On some points, however, the facts are not precisely the same.

[1] 1. We think the charges against the defendant were sufficiently definite. The petition of November 11, 1913, alleges:

"On October 15, 1913, Van Bittner, James Oates, Joseph July, Thomas Smith, Richard Webb, and Paul Scoric organized and held a meeting near your petitioner's Locust Grove mine, at which they paid certain sums of money to each of your petitioner's striking employés for the purpose of inducing them to remain away from work and continue on strike. At said meeting they made inflammatory speeches, entreated, persuaded, urged, and threatened your petitioner's employés, who are on a strike, to continue to remain away from work, and to induce those who are working to join the strike."

In the affidavit of Virgin, attached to the petition as a part of it, it is alleged:

"Van Bittner, James Oates, Joseph July, Secundo Coliffee, Tom Smith, Richard Webb, and Paul Scoric have, in violation of the restraining order above mentioned, advised, urged, and persuaded our miners to continue on a strike and to refuse to resume working under their contracts with our company. They have also held meetings as near to our mines as they could get without actually trespassing on the company's property, in which some of them, with others, have made inflammatory speeches, urging and persuading our employés to continue the strike and to continue in violation of their contracts to refuse to work in our mines. * * * I had also told Jos. July, Tom Smith, Richard Webb, Paul Scoric, and Meyer Schwartz about the restraining order, for the purpose of warning them against violating it, before they participated in the meeting above described. * * * Richard Webb is acting as secretary of the local union of the miners, has furnished them a place for holding the meeting, and is constantly active in encouraging, persuading, and urging the strikers to continue on a strike and to refuse to work, and in inducing those who are working to quit work in violation of their respective contracts of employment. Paul Scoric, Tom Smith, and Jos. July are actively engaged in doing the same thing."

Still more specific are the following charges contained in the affidavit of Virgin, attached to the second and supplemental petition of January 17, 1914:

"That some of said parties, James Oates, Tom Smith, and Paul Scoric, against whom a rule was issued by said court, and who, among others, promised to remove the two tents on the county road immediately in front of some of the company's houses, have not removed said tents, but still maintain them as headquarters for striking miners of the said West Virginia-Pittsburg Coal Company, over which place said James Oates, Tom Smith, and Paul Scoric, and their associates, Dan R. Brown, Carl Neidhoffer, Paul Wetter, W. H. Thompson, William Bailey, Sheaky Heaky, and Carls Schmidt, frequently met with other of the striking miners and create disturbance of the peace, and some of them go upon the company's grounds and threaten violence to the officers of the company and do violence to employés of the company. * * * That on the morning of Saturday, January 3, 1914, about 11 o'clock a. m. the said Paul Scoric and Carl Neidhoffer assaulted John Mathia and Hector Gobi on the company's grounds, while they were working for the said company, the said Scoric saying, among other things, to Mathia, 'I will kill you,' and threw a half brick at Mathia's head, the said Neidhoffer striking the said Hector Gobi with a large club, at the same time threatening to do him great bodily harm."

2. If there was an order suspending the proceeding against Scoric until the further order of the court, it does not appear in the record. But the original proceeding had not been dismissed and was still pending when the supplemental petition was filed on January 17, 1914. The charges under this second petition, which he was also required to answer, were contained in an affidavit made January 5, 1914. It is therefore obvious that the scope of the court's inquiry properly embraced all charges of specific acts of disobedience of its order done between the date of the temporary restraining order and the affidavit made on January 5, 1914.

3. It is true that Scoric denied all these charges; but it is not seriously disputed that there was evidence from other witnesses, which might well be accepted as true by the District Court, supporting some of the charges of contempt. This being so, this court can give no relief against the finding of the trial court. Bessette v. Conkey Co., 194 U. S. 338, 24 Sup. Ct. 665, 48 L. Ed. 997.

[2] 4. The point was made for the first time at the oral argument in this court that the proceeding must be dismissed because the name of Paul Scoric does not appear in the order of December 1, 1913, setting out that the petition and affidavits showed a case of criminal contempt, and ordering the case to be prosecuted in the name of the United States against Van Bittner and others named, and docketed as a criminal cause on the law side of the court. It is perfectly clear from the record that the omission was merely a clerical error, which in no wise prejudiced the defendant. He was one of the parties distinctly charged by name in the original petition with specific acts of contempt. He appeared by attorney in the cause on November 25, 1913, in response to the order of November 11, 1913, pleaded not guilty to the charge, and was allowed further time to produce his witnesses. He appeared again on December 2, 1913, submitted himself to the court, and promised to obey the order. He was distinctly charged by name with definite acts of contempt in the second petition. In response to the attachment issued against him he again appeared in person and by attorney on January 27, 1914, and upon denial of his motion to quash

the petition pleaded not guilty. Under these circumstances the clerical mistake of omitting the name of the defendant from the order of December 1st cannot avail; for the point is altogether technical. The principle was thus applied in Holmgren v. United States, 217 U. S. 509, 30 Sup. Ct. 588, 54 L. Ed. 861, 19 Ann. Cas. 778, where the name of a person other than the defendant was used in an indictment for perjury:

"It is further urged that the indictment in the third count thereof does not properly charge an offense against Holmgren. It is true that in the third count it appears that the name of Frank Werta, the alien, was written by mistake for that of Gustav Holmgren, in averring that the witness was duly and properly sworn; but this count also contains the averment that 'the said Gustav Holmgren, having taken such oath to testify as aforesaid, did then and there willfully,' etc., and 'contrary to the said oath testify in substance and to the effect,' etc. This objection does not appear to have been specifically pointed out in the demurrer, or otherwise taken advantage of upon the trial. In this proceeding it is too late to urge such objections to a matter of form, unless it is apparent that it affected the substantial rights of the accused. Rev. Stat. § 1025; Connors v. United States, 158 U. S. 408 [15 Sup. Ct. 951, 39 L. Ed. 1033]; Armour Packing Co. v. United States, 209 U. S. 56, 84 [28 Sup. Ct. 428, 52 L. Ed. 681]."

[3] This court in a unanimous opinion (John Mitchell et al. v. Hitchman Coal & Coke Co., 214 Fed. 685, 131 C. C. A. 425) has expressed its views fully on the limits to which an injunction of this sort should go. It was there held that it is an invasion of the rights of the citizen to enjoin the promotion of a labor union by persuasion and other peaceable and lawful means. Had this order of injunction been brought up for review by the defendant, it would have been modified in his behalf. But it is too late to allege before this court that the injunction was too broad, when the defendant appeared in court to answer the charge of violating the injunction, and, instead of bringing the order up for review, waived all objections to it by submitting himself and promising obedience to it.

Affirmed.

(217 Fed. 875)

CLINCHFIELD COAL CORPORATION v. STEINMAN.

(Circuit Court of Appeals, Fourth Circuit. September 8, 1914.)

No. 1265.

1. SPECIFIC PERFORMANCE (§ 38*) — CONTRACTS ENFORCEABLE — PAROL CONTRACTS FOR CONVEYANCE OF LAND.

To render a parol contract for the conveyance of land specifically enforceable in equity, it must be certain and definite in its terms, the acts of part performance proved must refer to, result from, or be done in pursuance of the contract proved, and it must have been so far executed that damages will not afford full compensation for its breach.

[Ed. Note.—For other cases, see Specific Performance, Cent. Dig. § 113; Dec. Dig. § 38.*]

2. EQUITY (§ 263*)—BILL—DISMISSAL FOR INSUFFICIENCY OF ALLEGATION.

Since a bill in equity is required to state only the ultimate facts, a court should be cautious not to dismiss a bill for mere lack of fullness of detail in allegation.

[Ed. Note.—For other cases, see Equity, Cent. Dig. §§ 535-540; Dec. Dig. § 263.*]

3. GIFTS (§ 45*)—PAROL GIFT OF LAND—SUIT TO ESTABLISH TITLE AGAINST SUBSEQUENT GRANTEE.

A bill alleging a parol contract by the owner of land to give a definitely agreed upon tract of the same to his son as an advancement and in full of his share in the father's estate, and that the son at once took and held open and notorious possession and improved and continued to reside with his family on the land, which was subsequently conveyed to him by his father, *held* to state a cause of action to establish his equitable title from the date of the contract as against a later conveyance by his father of mineral rights in the land.

[Ed. Note.—For other cases, see Gifts, Cent. Dig. § 80; Dec. Dig. § 45.*]

4. GIFTS (§ 45*)—PAROL GIFT OF LAND—SUIT TO ESTABLISH TITLE AGAINST SUBSEQUENT GRANTEE.

That there was some discrepancy between the boundary of the land as described in the alleged parol contract and in the subsequent deed made in confirmation thereof did not justify the dismissal of the bill on demurrer or motion; the land being at the time undeveloped and of small value, and absolute accuracy in such respect not being essential.

[Ed. Note.—For other cases, see Gifts, Cent. Dig. § 80; Dec. Dig. § 45.*]

5. VENDOR AND PURCHASER (§ 232*)—BONA FIDE PURCHASERS—POSSESSION AS NOTICE OF PRIOR RIGHTS—"NOTICE."

Under the law of Virginia, open and peaceable possession of land under a claim of right is "notice" to a subsequent purchaser of the right or claim of the person in possession both to the surface and minerals thereunder.

[Ed. Note.—For other cases, see Vendor and Purchaser, Cent. Dig. §§ 540-545, 548-562; Dec. Dig. § 232.*]

6. QUIETING TITLE (§ 29*)—LACHES—SUIT TO ESTABLISH EQUITABLE TITLE TO LAND.

One in the exclusive possession of land under claim of title is not chargeable with laches in not bringing suit to establish his right, so long as no superior title is asserted by another.

[Ed. Note.—For other cases, see Quieting Title, Cent. Dig. § 63; Dec. Dig. § 29.*]

*For other cases see same topic & § NUMBER in Dec. & Am. Digs. 1907 to date, & Rep'r Indexes

Appeal from the District Court of the United States for the Western District of Virginia, at Big Stone Gap; Henry Clay McDowell, Judge.

Suit in equity by the Clinchfield Coal Corporation against A. J. Steinman. Decree for defendant, and complainant appeals. Reversed.

For opinion below, see 213 Fed. 557, 130 C. C. A. 137.

W. H. Rouse, of Clintwood, Va., and E. M. Fulton, of Wise, Va. (H. G. Morison, of Johnson City, Tenn., on the brief), for appellant.

J. Hale Steinman, of Lancaster, Pa., and R. T. Irvine, of Big Stone Gap, Va. (J. F. Bullitt, of Big Stone Gap, Va., and A. C. Anderson, of Wise, Va., on the brief), for appellee.

Before PRITCHARD, KNAPP, and WOODS, Circuit Judges.

WOODS, Circuit Judge. The plaintiff in its bill claims an equitable title to a tract of land containing 54 acres derived through successive conveyances from John W. Fleming, holding under an alleged parol gift from his father, Philip Fleming, made in 1870. Under the allegation that the equitable title set up is prior in date to the defendant's legal title from Philip Fleming, dated December 18, 1874, conveying all the coal, iron ore, and other minerals and fire clay in and under a tract of land containing about 1,000 acres, including the land in dispute, the plaintiff asks that the defendant be enjoined from prosecuting his pending action of ejectment brought under the deed of Philip Fleming to him, and that he be required to specifically perform the agreement to convey attributed to his grantor Philip Fleming. The District Judge sustained a demurrer to the original bill, and afterwards under the new equity rules granted a motion to strike from the files the amended bill.

[1] The main question to be decided on the appeal is whether the amended bill sets out a definite and enforceable parol contract of conveyance covering a particular tract of land. The rules on the subject have been considered and stated in many Virginia cases, from Shobe v. Carr, 3 Munf. (Va.) 10, to McLin v. Richmond, 114 Va. 244, 76 S. E. 301. Variance will be found in the language of the opinions, and some of them may seem to lay down more stringent requirements than others. But the established rules which control all the decisions are those stated by Judge Keith in McLin v. Richmond, supra:

"First, 'that the agreement relied on is certain and definite in its terms; second, that the acts proved in part performance must refer to, result from, or be made in pursuance of the agreement proved; and, third, that the agreement must have been so far executed that a refusal of full execution would operate a fraud upon the party and place him in a situation which does not lie in compensation. Wright v. Pucket, 22 Grat. (63 Va.) 370; Plunkett v. Bryant, 101 Va. 818, 45 S. E. 742; Reed v. Reed, 108 Va. 790, 62 S. E. 792."

In Wright v. Pucket, 22 Grat. (Va.) 374, and Crane's Nest C. & C. Co. v. Virginia, etc., Co., 108 Va. 862, 62 S. E. 954, it is said:

"The tendency of all the modern cases, both in England and in this country, is to prefer giving the party compensation in damages, instead of a spe-

cific performance. Wherever damages will answer the purpose of indemnity, this alternative will be preferred, as it will equally satisfy justice, and will be coincident with the provisions and in support of the authority of the statute."

[2] Nearly all the reported cases were decided on the application of these general rules to the evidence adduced. In applying them to the decision of a demurrer or a motion to strike out a pleading, it is to be borne in mind that the demurrer admits, not only the facts specifically alleged, but all facts which are reasonably inferable from those alleged. United States v. Des Moines, etc., Co., 142 U. S. 510, 12 Sup. Ct. 308, 35 L. Ed. 1099. It is not to be expected that the bill should set out the evidence to be adduced; for good pleading requires that the bill state only the ultimate facts to be proved by the details of the evidence. Therefore the court should be cautious not to dismiss a bill for mere lack of fullness of detail in the allegation. The general principle is thus stated in Daniell's Chancery Pleading and Practice:

"A demurrer will lie wherever it is clear that, taking the charges in the bill to be true, the bill would be dismissed at the hearing, but it must be founded on this, that it is an absolute, certain, and clear proposition that it would be so; for if it is a case of circumstances, in which a minute variation between them as stated by the bill, and those established by the evidence, may either incline the court to modify the relief or to grant no relief at all, the court, although it sees that the granting the modified relief, at the hearing will be attended with considerable difficulty, will not support a demurrer. Therefore, where a bill was filed for the specific performance of an agreement entered into by a bankrupt, by the intervention of an agent, and previous to the bankruptcy, a correspondence took place, through the agent, as to granting a lease, and the case turned upon the point whether the facts stated amounted to a perfect agreement, Lord Loughborough thought that, although the circumstances, as stated in the bill, amounted more to a treaty than a complete agreement, the question whether it was an agreement or not must depend very much upon the effect of the evidence, and therefore overruled the demurrer."

This rule was approved in Kansas v. Colorado, 185 U. S. 125, 22 Sup. Ct. 552, 46 L. Ed. 838, and Van Dyke v. Norfolk, etc., R. Co., 112 Va. 835, 72 S. E. 659, though in the latter case it was held to be limited by the consideration in actions for specific performance that the court "must be enabled to say from the facts and circumstances alleged in the bill whether the minds of the parties met upon all the essential particulars of the contract, and, if they did, then can say exactly upon what substantial terms they agreed and trace out the particular line where their minds met."

[3] The allegations of the amended bill to be tested by these rules are:

"That the said deed from Philip Fleming to John W. Fleming, dated February 23, 1878, hereinbefore filed as Complainant's Exhibit No. 19, on its face indicates that the title of John W. Fleming, your orator's predecessor in title, originated of that date. As a matter of fact, your orator charges that long prior to the said date, to wit, some time in the fall of 1870, the said John W. Fleming became vested with a complete equitable title to the said boundary of land under and by virtue of a parol gift in the nature of an

advancement made to him by his father, Philip Fleming, under the following circumstances: The said Philip Fleming had expressed his intention to divide his estate among his children during his lifetime. The said John W. Fleming, who was at this time living with his father, became engaged to marry, and the said Philip Fleming, knowing this fact, and desirous to provide his said son with a home, offered to give to the said John W. Fleming, in the nature of an advancement, the choice of two parcels of land, both of which were portions of a tract containing about 1,000 acres conveyed to him by Warders. The said John W. Fleming selected the tract of land, which was then and there pointed out, indicated and described to him, as follows: All the land bounded by the Elias J. Rose tract, James A. Collier tract, and a line commencing at a beech on Big branch, the beginning corner of the said Rose tract, and running thence in a westwardly direction, and so as to take in the heads of the hollows to a sugar tree in the forks of the Sawpit hollow, then designated and agreed upon; thence a straight line to a large chestnut on Big branch, then designated and agreed upon; thence a straight line to the top of the ridge to a large chestnut, then designated and agreed upon; thence south up to the top of the ridge to a walnut on Short branch, then designated and agreed upon, on the Collier line; thence with the Collier and Rose lines to the beginning. The said John W. Fleming then and there accepted the said parol gift as an *advancement* and in *full of his portion* of his father's estate and *has never* received any other property from the estate of his said father, Philip Fleming, who died intestate about 20 years ago.

"Immediately thereafter the said John W. Fleming entered into possession of the said land, made large expenditures thereon, and began to clear, fence, and cultivate the same, and in December, 1870, he erected a substantial log house thereon. On October 6, 1870, the said John W. Fleming married and immediately moved upon said land and into the said house, and was living in the said house, cultivating and improving the said land, and in the open, notorious, and exclusive possession of every part thereof on December 18, 1874, the date upon which the said Philip Fleming executed an attempted deed, hereinafter filed as an exhibit, to J. D. Price and A. J. Steinman, and has lived upon and cultivated the said land up until the present time. Your orator would here state that the said land so indicated, pointed out, and given to the said John W. Fleming by his father, the said Philip Fleming, was and is the same tract of land which was afterwards conveyed to the said John W. Fleming by deed dated February 23, 1878, hereinbefore filed as Complainant's Exhibit No. 10."

Thus the bill distinctly alleges (1) a contract by parol that John W. Fleming should have the land, supported by the consideration of love and affection, and in pursuance of the intention of Philip Fleming to divide his property among his children, and of the agreement between father and son that this land should be all that the son should receive from his father; (2) the taking and holding exclusive and adverse and notorious possession of the entire land by the son; (3) making large expenditures thereon by the son, building a house, clearing and fencing, and making it his family home in reliance on the contract.

This seems to be sufficient to bring the case within the rule stated in McLin v. Richmond, supra. It is true that the improvements made by the son might represent little value in later conditions or in a developed or progressive community, but under such primitive conditions as the bill implies it may be reasonably inferred that they were the result of arduous and continuous labor bestowed in reliance on the contract that the title to the land should pass, and were such improvements of his home as to make the loss of it irremediable. Whether this is so or not will be determined by the evidence. To say the least, it seems to us that

the case stated in the bill is strong and clear enough to make decision of it under a demurrer unsafe.

[4] 2. Importance was attached in the decree of the District Court to the apparent discrepancy between the description of the land in the amended complaint, which seems to call for a straight line on one side from the "big beech" to the "sugar tree," and the description in the deed of 1878, made by Philip Fleming to John W. Fleming, alleged to embrace the land in dispute, which seems to call for three lines between the points designated. It is true that a parol contract for the conveyance of land and the acts done under it must bear upon a definite tract distinctly identified by boundaries or otherwise; but the exaction of absolute accuracy would be unreasonable, especially as to lands of little value and in an undeveloped country. The discrepancy may be of great significance, or so slight as to be unimportant; that can only be determined when the evidence is before the court.

[5] Under the rule in Virginia proof of notice to defendant of the John W. Fleming interest in the land must have been "such as to affect the conscience of the purchaser, and must be so strong and clear as to fix upon him the imputation of mala fides." Vest v. Michie, 31 Grat. (Va.) 149, 31 Am. Rep. 722; Arbuckle v. Gates, 95 Va. 802, 30 S. E. 496; Crane's Nest, etc., Co. v. Virginia, etc., Co., supra. But in Chapman v. Chapman, 91 Va. 397, 21 S. E. 813, 50 Am. St. Rep. 846, it is held that such possession as is here alleged is notice:

> "The open and peaceable possession of land under a claim of right is notice to all the world of the right or claim of the person in possession; and where one buys land in the possession of another than his vendor or grantor, he is bound to take notice of such possession and of all that it imports."

Possession of the surface was possession of all the untouched minerals under the surface. Steinman v. Vicars, 99 Va. 597, 39 S. E. 227. And there is nothing in the position that the notice given by possession did not extend to notice of claim to the minerals.

[6] Laches in delaying to bring his action from 1870 until 1912 cannot be attributed to John W. Fleming, since it is alleged he was in the exclusive possession of the land, and there was no assertion of any superior title by the defendant or those under whom he claims. Ruckman v. Cory, 129 U. S. 387, 9 Sup. Ct. 316, 32 L. Ed. 728.

The decree of the District Court must be reversed.

Reversed.

(217 Fed. 880)

PECK et al. v. RICHTER.

(Circuit Court of Appeals, Eighth Circuit. September 10, 1914.)

No. 141.

1. BANKRUPTCY (§ 342½*)—REVIEW OF DECISION OF REFEREE—ESTOPPEL.
Where a bankrupt filed three separate claims against his trustee for services rendered to the estate, two of which were disallowed and the third allowed in part, his acceptance of such allowance did not estop him from the right to review the referee's decision as to the other claims.

[Ed. Note.—For other cases, see Bankruptcy, Cent. Dig. § 530; Dec. Dig. § 342½.*]

2. BANKRUPTCY (§ 482*) — ATTORNEY'S DOCKET FEE — "REFEREE" — "FINAL HEARING IN EQUITY."
A referee in bankruptcy, first provided for by Bankr. Act July 1, 1898, c. 541, 30 Stat. 544 (Comp. St. 1913, §§ 9585–9656), is not a "referee," within the meaning of Rev. St. § 824 (Comp. St. 1913, § 1378), which provides for the taxation of an attorney's or solicitor's fee of $20 "on a trial before a jury in civil or criminal causes or before referees, or on a final hearing in equity or admiralty"; nor is a review by the District Court of an order of a referee allowing or disallowing a claim or an administration charge against a trustee a "final hearing in equity," within such provision, and in no event can more than one such docket fee be taxed in any one bankruptcy proceeding.

[Ed. Note.—For other cases, see Bankruptcy, Cent. Dig. §§ 874–876, 897; Dec. Dig. § 482.*

For other definitions, see Words and Phrases, First and Second Series, Referee.]

Petition to Revise Orders of the District Court of the United States for the District of South Dakota; James D. Elliott, Judge.

In the matter of Joseph C. Richter, bankrupt. Petition by Miles E. Peck, trustee, and the Clark Implement Company, to revise orders of the District Court in favor of the bankrupt. Reversed in part.

L. E. Waggoner and Joe Kirby, both of Sioux Falls, S. D., for petitioners.

Robert F. Riemer, of Sioux Falls, S. D., for respondent.

Before SANBORN and SMITH, Circuit Judges, and TRIEBER, District Judge.

SMITH, Circuit Judge. The respondent, Joseph C. Richter, was adjudged a voluntary bankrupt August 1, 1913, and the petitioner, Miles E. Peck, was on August 18, 1913, chosen and qualified as trustee of the bankrupt estate. The bankrupt filed three separate and distinct claims against the estate.

(1) The first of these claims was for cutting and shocking 27 acres of wheat and 107 acres of oats belonging to the bankrupt estate after the petition in bankruptcy was filed, about August 1, 1913, and before the qualification of the trustee, which was about August 18, 1913.

*For other cases see same topic & § NUMBER in Dec. & Am. Digs. 1907 to date, & Rep'r Indexes

(2) The second claim was for stacking the same wheat and oats and furnishing board for the men, after the trustee was appointed and at his request.

(3) The third claim was for taking care of the horses, cattle, and hogs belonging to the bankrupt estate after the filing of the petition but both before and after the appointment of the trustee.

The referee allowed only $15 on the first claim for binder twine and rejected the balance of that claim and all of the second and third claims. The bankrupt applied for review by the judge under section 38 of the Bankruptcy Act and General Orders No. 27 (89 Fed. xi, 32 C. C. A. xxvii). The trustee sought to have the proceedings for review dismissed because he had paid and the bankrupt had accepted the $15 allowed him; but this application was denied, and the trustee seeks in this proceeding to revise that action of the court. These claims were all for expenses of administering the estate under section 62 of the Bankruptcy Act, and were not for debts which may be proved under section 63 of the Bankruptcy Act. In other words, the claims were all in the nature of costs, and not in the nature of debts.

[1] It is the contention of the petitioners that the bankrupt, having taken the $15 awarded him by the referee, should now be held to have waived the right of review and be estopped to contend that the adjudication of the claims should be set aside. His position will be conceded as a general proposition. That is, it will be conceded that the rule is well established that a party who claims the benefit of an order or judgment in a case, or accepts the benefits or receives the advantages thereof, shall be afterwards precluded from asking that the order or judgment be revised or set aside. This is a general rule and is well established, but it is subject to several exceptions. It will be sufficient to point out one of these:

> "When Judgment Settles Distinct Controversies. When a judgment or decree settles two or more distinct controversies, the acceptance of a sum of money, to which appellant is declared to be entitled by one portion of the judgment or decree, does not estop him from appealing from another and independent adjudication therein." 2 Cyc. 654.

This is fully sustained by decisions of this court (Darragh v. H. Wetter Manufg. Co., 78 Fed. 7, 23 C. C. A. 609; In re Letson. 157 Fed. 78, 84 C. C. A. 582); and by the Supreme Court (Gilfillan v. McKee, 159 U. S. 303, 16 Sup. Ct. 6, 40 L. Ed. 161; Embry v. Palmer, 107 U. S. 3, 2 Sup. Ct. 25, 27 L. Ed. 346); and by the Circuit Court of Appeals of the Seventh Circuit (Worthington v. Beeman, 91 Fed. 232, 33 C. C. A. 475); and by numerous state courts (Tyler v. Shea, 4 N. D. 377, 61 N. W. 468, 50 Am. St. Rep. 660; Wishek v. Hammond, 10 N. D. 72, 84 N. W. 587; Goodlett v. Investment Co., 94 Cal. 297, 29 Pac. 505; Fiedler v. Howard, 99 Wis. 388, 75 N. W. 163, 67 Am. St. Rep. 865). In Byram v. Polk County, 76 Iowa, 75, 40 N. W. 102, it was held by the Supreme Court of Iowa that acceptance by an officer of a specific item of his account for fees awarded him by the district court is not a waiver of his right of appeal as to other items.

The additional allowance was made on the second and third claims

filed by the bankrupt, and no more was allowed him under the first claim than the $15 for binding twine. If an additional amount had been allowed under the first claim, a somewhat close question would be presented; but we have no doubt that the bankrupt still retained the right to a revision of the refusal of the referee to allow him anything on his second and third claims, and the application to revise the action of the District Court in this regard must be denied.

[2] The application for review was determined by the District Court on December 4, 1913. The decision was as follows:

"1. That the bankrupt be allowed a reasonable compensation for all services rendered or caused to be rendered for the trustee herein after his appointment for stacking the said grain herein mentioned, and for taking care or having taken care of the said live stock belonging to the bankrupt estate from the time of the appointment of the trustee to the 17th day of October, A. D. 1913, inclusive, for the reason that the bankrupt after the appointment of the trustee does not owe the creditors the duty to take care of the bankrupt estate for the trustee without compensation, and said services were performed at the request of the trustee.

"2. That this matter be referred back to the said Hon. Henry A. Miller, referee in bankruptcy, in the above-entitled matter, for the purpose of taking proof or evidence as to the reasonable value of the services rendered by the bankrupt or caused to be rendered as aforesaid.

"3. That the bankrupt recover his costs and disbursements herein out of the estate of the said bankrupt."

Presumptively under the last clause the clerk taxed an attorney's docket fee of $20 in favor of the bankrupt's attorney. The trustee excepted to this taxation, and on December 18, 1913, filed a motion to retax costs and that this item be not allowed. On December 31, 1913, the court made the following order:

"1. That the order made and filed in the above-entitled matter by the judge of this court on the 4th day of December, A. D. 1913, on a referee's certificate to review, be modified to the extent that the bankrupt, Joseph C. Richter, be allowed an attorney's docket fee of $20, and it is so ordered.

"2. That the costs as taxed by the clerk on the 8th day of December, 1913, the same consisting of the following items: Docket fee, $20; two affidavits, 50 cents; and clerk's fees, $5.95—or a total of $26.45, be the judgment of this court, together with subsequent clerk's fees incurred in said matter, and amounting to $1.55."

The action of the court is sought to be revised in this respect. It is provided by statute:

"Fees of Attorneys, Solicitors, and Proctors. Sec. 824. On a trial before a jury, in civil or criminal causes or before referees, or on a final hearing in equity or admiralty, a docket fee of twenty dollars."

The first question is: Was there a referee in this case within the meaning of this statute? And the second is: Was there a final hearing in equity?

This statute was first enacted in 1853. Act Feb. 26, 1853, c. 80, 10 Stat. 161. There was then no referee provided for by federal statute, and the referees referred to here manifestly were common-law referees. There was at that time no bankruptcy law in existence. The act of 1841 had been repealed on March 3, 1843. 5 Stat. 614, c. 82.

But even the act of 1841 did not provide for any referees but did provide for commissioners. The Bankruptcy Act of 1867 made no reference to referees, but provided for registers. The act of 1898, first created the office of referee in bankruptcy.

If this new officer is a referee, within the meaning of section 824, Revised Statutes, the expenses of bankruptcy proceedings are to be vastly increased by the taxation of $20 on every claim heard by him. Such was not the contemplation of the bankruptcy law, and the court apparently recognized this, for it ordered the taxation of this fee as a part of its order of December 4, 1913. We conclude that a referee in bankruptcy appointed under the act passed in 1898 is not a referee, within the meaning of section 824 of the Revised Statutes, first enacted in 1853.

Was the hearing by the court a final hearing in equity? There was but one bankruptcy proceeding pending, and if this was a final hearing, then there might be innumerable final hearings in the one proceeding, and innumerable taxations of $20. There was nothing pending but the bankruptcy proceeding, and it has been held that where the proceeding is voluntary there can be no such fee taxed at all, but when the proceeding is involuntary such a fee may be taxed in the bankruptcy proceeding. Note to Coy v. Perkins (C. C.) 13 Fed. 111, 115; Gorden v. Scott, 10 Fed. Cas. 816; In re Mead, 16 Fed. Cas. 1274. In any event there could only be one final hearing in the bankruptcy case, and the taxation of such a fee upon the determination of each claim and administrative charge would mean ruin to many bankrupt estates. It is our duty to so interpret this statute as to preclude such a result. Central Trust Co. v. Wabash, St. Louis & Pac. Ry. Co. (C. C.) 32 Fed. 684.

The action of the District Court in allowing this fee is set aside, and it is ordered to disallow the item of $20 docket fee as a part of the cost of this proceeding. Owing to the fact that upon the principal matter here presented the action of the District Court is sustained, there will be no judgment for costs.

(217 Fed. 884)

RAWLINS et al. v. HALL-EPPS CLOTHING CO. et al.

(Circuit Court of Appeals, Fifth Circuit. October 28, 1914.)

No. 2685.

1. BANKRUPTCY (§ 236*)—ORDER FOR EXAMINATION OF BANKRUPT—AUTHORITY OF COURT—TIME—"IN PROCESS OF ADMINISTRATION."

Under Bankr. Act July 1, 1898, c. 541, § 21a, 30 Stat. 552 (Comp. St. 1913, § 9605), authorizing the examination of a bankrupt and other witnesses concerning the acts or property of a bankrupt "whose estate is in process of administration," the court has authority to order such an examination at any time after the filing of a petition, although the proceedings are involuntary, and there has been no adjudication nor appointment of a receiver. The court, however, should not permit such examination to be perverted from the purpose it is intended to accomplish, which is the recovery of assets of the estate for distribution, to that of aiding the petitioning creditors in establishing their case for adjudication.

[Ed. Note.—For other cases, see Bankruptcy, Cent. Dig. §§ 393, 394; Dec. Dig. § 236.*]

2. BANKRUPTCY (§ 235*)—EXAMINATION OF BANKRUPT—PROCEEDINGS TO PROCURE—NOTICE.

An order for the examination of a bankrupt under Bankr. Act, § 21a, is not granted to petitioning creditors as a matter of right, and where, in involuntary proceedings, there has been no adjudication nor appointment of a receiver, should not be granted without giving the bankrupt notice and an opportunity to be heard.

[Ed. Note.—For other cases, see Bankruptcy, Cent. Dig. §§ 389, 395-397; Dec. Dig. § 235.*]

3. BANKRUPTCY (§ 235*)—EXAMINATION OF BANKRUPT—REASONABLENESS OF ORDER.

A general order requiring alleged bankrupts, who were mercantile partners and resided at a distance from the referee, to appear for examination prior to the adjudication, and to produce all their books of account and other writings and memoranda "from which might be ascertained any of the matters and things to be covered in said examination," *held* unreasonable and erroneous, as too broad in its terms.

[Ed. Note.—For other cases, see Bankruptcy, Cent. Dig. §§ 389, 395-397; Dec. Dig. § 235.*]

Petition to Superintend and Revise from the District Court of the United States for the Southern District of Georgia; Wm. B. Sheppard, Judge.

In the matter of J. C. Rawlins and S. J. Rawlins, partners as the Rawlins Mercantile Company, alleged bankrupts. Petition by bankrupts to superintend and revise an order for their examination procured by the Hall-Epps Clothing Company and others, petitioning creditors. Order reversed.

Alexander Akerman and Charles Akerman, both of Macon, Ga., for petitioners.

George S. Jones and Orville A. Park, both of Macon, Ga., for respondents.

*For other cases see same topic & § NUMBER in Dec. & Am. Digs. 1907 to date, & Rep'r Indexes

Before PARDEE, Circuit Judge, and GRUBB and CALL, District Judges.

GRUBB, District Judge. This was a petition to superintend and revise an order of the District Court for the Southern District of Georgia, directing the petitioners, hereafter designated "the bankrupts," against whom an involuntary petition in bankruptcy had been filed in that court, to appear before the referee in bankruptcy at Macon, Ga., to be examined as witnesses concerning the acts, conduct, and property of the bankrupt, which was a partnership composed of the petitioners, and with reference to the cause of its bankruptcy, its dealings with creditors and other persons, the amount and the whereabouts of its property, and in addition all matters which may affect the administration and settlement of the estate. The order further required the petitioners to produce for inspection and examination before the referee at the time and place of the examination all of the books of account of the bankrupt and other writings and memoranda from which might be ascertained any of the matters and things to be covered in said examination. The petitioners, the alleged bankrupts, filed an answer, denying insolvency and the commission of an act of bankruptcy, and demanding a jury trial for those issues. The order complained of was made before adjudication, and before the appointment of a receiver. The petitioners' residence and place of business was distant from Macon, the place of examination.

The order is assailed for three reasons, and it is contended by petitioners:

(1) That the court was without authority to make the order in advance of an adjudication and when no receiver had been appointed in the case.

(2) That the order was made without notice to the bankrupts, and without affording them an opportunity to be heard upon it before it was made.

(3) That the order was unreasonable in its terms, in that it required the production of all the books of account and other writings and memoranda from which might be ascertained any matters to be covered by the proposed examination, without specification or identification, except by way of a general conclusion.

[1] First. The authority for the examination is claimed to be found in section 21a of the act of 1898. The application was made by the petitioning creditors, as authorized by that section. The question is whether section 21a authorizes an examination of the bankrupt before adjudication and in the absence of the appointment of a receiver. This depends upon whether a bankrupt estate in that attitude can be said to be in the process of administration, within the meaning of that language in section 21a of the Bankruptcy Act. The Supreme Court of the United States in the case of Cameron v. United States, 231 U. S. 710, 34 Sup. Ct. 244, 58 L. Ed. 448, has held with reference to a voluntary bankruptcy, in which a receiver had been appointed, that:

"The estate of the bankrupt is in process of administration after the petition has been filed and a receiver appointed, and an examination may be ordered at any time thereafter under section 21a of the Bankruptcy Act."

While the decision may not be broad enough to extend to an involuntary bankruptcy and one in which there is no receivership, the reasoning of the court would indicate that the bankrupt court had authority to make such an order in an involuntary case in which no receiver had been appointed. Referring to the meaning of the words found in section 21a, "a bankrupt whose estate is in process of administration under this act," the court said (231 U. S. page 717, 34 Sup. Ct. 246, 58 L. Ed. 448):

"We are of opinion that the estate was in process of administration at the time when the examination before the commissioner was ordered and the testimony of Cameron given. This court has decided that the filing of the petition in bankruptcy operates to place the property of the alleged bankrupt in custodia legis and prevents any creditor from attaching it; and, although by the terms of the act the estate does not vest in the trustee until the date of the adjudication, it is placed at the time of the filing of the petition under the control of the court with a view to its ultimate distribution among creditors. Acme Harvester Co. v. Beekman Lumber Co., 222 U. S. 300, 307 [32 Sup. Ct. 96, 56 L. Ed. 208]. And see Mueller v. Nugent, 184 U. S. 1, 14 [22 Sup. Ct. 269, 46 L. Ed. 405]; Everett v. Judson, 228 U. S. 474, 478, 479 [33 Sup. Ct. 568, 57 L. Ed. 927, 46 L. R. A. (N. S.) 154]. And this is true, notwithstanding, as contended by the petitioner, that, should the attempt to obtain an adjudication of bankruptcy fail upon the subsequent hearings, the receivership would necessarily be vacated and the property turned back to the alleged bankrupt."

This would seem to imply that the bankrupt estate was in process of administration, for the purpose of section 21a, from the time of the filing of the petition. The language of the Supreme Court seems to apply to an involuntary case as well as to a voluntary case. In view of the language of the opinion, we are not disposed to hold that the court below was without authority to grant an order for the examination of the bankrupts, under proper terms and conditions, before adjudication and in the absence of a receivership.

The purpose of the examination is to develop the whereabouts of assets of the estate for the purpose of aiding its administration, and not to enable the petitioning creditors to elucidate evidence to assist them in establishing the insolvency of the bankrupt or the act or acts of bankruptcy relied upon by them. This is quite manifest from the following language of the Supreme Court in the case quoted from (231 U. S. at pages 717 and 718, 34 Sup. Ct. 246, 58 L. Ed. 448), viz.:

"In order to arrive at the true meaning of section 21a, other provisions, as well as the purpose of the act, must be had in view. The object of the examination of the bankrupt and other witnesses to show the condition of the estate is to enable the court to discover its extent and whereabouts, and to come into possession of it, that the rights of creditors may be preserved. If such examination is postponed until after adjudication, which may not take place for at least 20 days, within which the bankrupt in involuntary bankruptcy is given leave to appear and plead, the estate may be concealed and disposed of, and the purpose of the act to hold it and to distribute it for the benefit of creditors defeated. The importance of such early examination of bankrupts was emphasized in Re Fleischer [(D. C.) 151 Fed. 81], supra."

Section 3d of the Bankrupt Act (Comp. St. 1913, § 9587) covers the examination of the bankrupt and the production of his books, so far as the issue of his solvency or insolvency, is concerned. It is, by that section, made his duty to appear on the hearing, if he denies insolvency, and submit to an examination and produce his books; the penalty of failure being that the burden of proving his solvency shall rest upon him. The two examinations provided for by these two sections are distinct, and the purpose of each is different.

The bankrupt court should not permit the examination provided for by section 21a to be perverted from the purpose it is intended to accomplish, viz., the recovery of assets of the estate for distribution, to that of aiding the petitioning creditors in establishing their case for adjudication. It can only happen in rare instances that an examination under section 21a can be useful before adjudication and in the absence of a receivership for the purpose of recovering assets, since in that situation there would be no officer of the bankrupt court authorized to seize the assets, when discovered. However, we are not prepared to say that there might not be a case when the utility of such an examination for the purpose intended, even in the absence of a receivership, might not be shown.

[2] Second. The order complained of was granted on the ex parte application of the petitioning creditors, and without giving the bankrupts a hearing upon the application. The order for the examination is not granted, as a matter of right, to the petitioning creditors, certainly not before adjudication, and when the bankrupts are denying insolvency and the commission of any act of bankruptcy, and we think the bankrupts should have been given notice and the opportunity to be heard in resistance of the application, before it was granted.

[3] Third. The order required the bankrupts to produce "all of the books of account of said Rawlins Mercantile Company, and other writings and memoranda, from which may be ascertained any of the matters and things, hereinbefore mentioned, and to be covered in said examination." We think the order was too broad and uncertain in its requirements. The alleged bankrupts' place of business was distant from the place fixed for the examination. The requirement of attendance would, in itself, be burdensome. The production of many books and papers would add materially to the burden. The bankrupts may have been in business many years, and their books of account and other writings and memoranda referring to their business voluminous. Many of them might be immaterial to the issues involved in the bankruptcy proceeding, yet the order places the risk of nonproduction on the bankrupts. They are required, by its terms, to determine at their peril what books of account and other writings and memoranda are material to the ascertainment of any of the matters mentioned in the order and to be covered in the examination.

We think this was requiring too much of the bankrupts. They should have been apprised by the order itself what specific books, writings, and memoranda they were required to produce. Possibly a requirement to produce their present books of account would have been sufficiently definite, since what those books of account were was more pe-

culiarly within the knowledge of the bankrupts. The requirement was not so limited. It was only restricted by the materiality of the books and documents to the purpose of a future examination, the scope of which was unknown to the bankrupts except as disclosed by the terms of the order. We think that the order was unreasonable, in that it required the producton of books and documents without proper description to enable the bankrupts to know with sufficient certainty what specific books and documents they were expected to produce to comply with it, and was therefore equivalent to a requirement to produce all the books and papers belonging to their business. Such an order to produce encountered the condemnation of the Supreme Court of the United States in the case of Hale v. Henkel, 201 U. S. 43–76, 26 Sup. Ct. 370, 380, 50 L. Ed. 652, in the following language:

"Applying the test of reasonableness to the present case, we think the subpœna duces tecum is far too sweeping in its terms to be regarded as reasonable. It does not require the production of a single contract, or of contracts with a particular corporation, or a limited number of documents, but all understandings, contracts, or correspondence between the MacAndrews & Forbes Company, and no less than six different companies, as well as all reports made and accounts rendered by such companies from the date of the organization of the MacAndrews & Forbes Company, as well as all letters received by that company since its organization from more than a dozen different companies, situated in seven different states in the Union. If the writ had required the production of all the books, papers, and documents found in the office of the MacAndrews & Forbes Company, it would scarcely be more universal in its operation, or more completely put a stop to the business of that company. Indeed, it is difficult to say how its business could be carried on after it had been denuded of this mass of material, which is not shown to be necessary in the prosecution of this case, and is clearly in violation of the general principle of law with regard to the particularity required in the description of documents necessary to a search warrant or subpœna. Doubtless many, if not all, of these documents may ultimately be required; but some necessity should be shown, either from an examination of the witnesses orally, or from the known transactions of these companies with the other companies implicated, or some evidence of their materiality produced, to justify an order for the production of such a mass of papers. A general subpœna of this description is equally indefensible as a search warrant would be, if couched in similar terms. Ex parte Brown, 72 Mo. 83 [37 Am. Rep. 426]; Shaftsbury v. Arrowsmith, 4 Ves. 66; Lee v. Angas, L. R. 2 Eq. 59."

For these reasons, we think the petition to superintend and revise should be granted, and the order of the District Court on which it is based should be set aside, and the respondents be taxed with the costs of this court; and it is so ordered.

(217 Fed. 889)

DREYER v. PERKINS.

In re PERKINS LUMBER CO.

(Circuit Court of Appeals, Fifth Circuit. November 3, 1914.)

No. 2644

BANKRUPTCY (§ 288*)—JURISDICTION OF COURT—SUMMARY PROCEEDING.

A court of bankruptcy is without jurisdiction in a summary proceeding to decree specific performance of a contract made by a bankrupt by directing his trustee to execute a conveyance of land.

[Ed. Note.—For other cases, see Bankruptcy, Cent. Dig. § 447; Dec. Dig. § 288.*

Jurisdiction of federal courts in suits relating to bankruptcy, see note to Bailey v. Mosher, 11 C. C. A. 313.]

Petition for Revision in Matter of Law of a Decree of the District Court of the United States for the Southern District of Georgia; Wm. B. Sheppard, Judge.

In the matter of the Perkins Lumber Company, bankrupt. Petition by Joseph M. Dreyer, trustee, to revise a decree in favor of H. W. Perkins. Modified.

Frederick T. Saussy, of Savannah, Ga., for petitioner.

Edw. S. Elliott, of Savannah, Ga., opposed.

Before PARDEE, Circuit Judge, and GRUBB and CALL, District Judges.

CALL, District Judge. In the bankruptcy case of the Perkins Lumber Company, H. W. Perkins filed an intervention, setting up, in short, that by certain arrangements, set out in said petition, he had been put in possession of certain land theretofore belonging to the bankrupt under an understanding that same was to be conveyed to him in fee simple, but deed had never been made, and praying that the trustee of the bankrupt's estate be required to make such deed to said lands to said Perkins, and the schedules of said bankrupt, in which said land was described, be corrected by eliminating said land therefrom. On this petition a rule nisi was issued, and said intervention was answered by the trustee, setting up various reasons why the prayers of the intervention should not be granted on the merits, and concluding with the prayer that the possession of the property be surrendered to the trustee to be administered, and that the answer be taken as a cross-bill for the purpose of recovering the land.

The referee thereupon proceeded to take testimony on the issues made by said intervention and answer, and on September 13, 1912, ordered the bankrupt's schedule to be corrected by striking therefrom the land described in the intervention; that the trustee in bankruptcy make a deed to H. W. Perkins for whatever interest the Perkins Lumber Company had or might have in the land. Within the time allowed

*For other cases see same topic & § NUMBER in Dec. & Am. Digs. 1907 to date, & Rep'r Indexes

by law, the trustee filed his petition for review by the judge of the District Court of this order, and on December 27, 1913, the District Court passed a final order confirming the ruling of the referee. It is this order of the District Court that is brought up for revision.

After the examination of the record and briefs in the case, we are of the opinion that the order or ruling of the referee went too far in requiring the trustee of the bankrupt to execute and deliver a deed of whatever rights the bankrupt may have had in the real estate to H. W. Perkins. The referee under the Bankrupt Act is not vested with the power to order specific performance of a contract, and this is what he attempted to do in this case. It is unquestioned the petitioner, Perkins, was in possession of the land in question, for some years prior to the bankruptcy proceedings, claiming title thereto adverse to the bankrupt. The District Court, under such state of facts, had no jurisdiction to proceed under summary proceedings to adjudicate the rights of the trustee or the adverse holder, as was attempted in this cause. While it is questionable whether the matter sought to be litigated herein was such as should have been brought by summary proceedings, still each of the parties sought that method and asked affirmative relief therein, and we therefore do not decide that question.

We see no error of law in the order of the District Court, affirming the ruling of the referee, except as above pointed out, and this cause is one of revision in matter of law. The ruling of the referee and judgment of the District Court should be amended, by striking from said ruling the portion requiring the deed from the trustee in bankruptcy; and the judgment, thus amended, is affirmed.

The costs of this court will be taxed against the petitioner, H. W. Perkins, who first invoked the summary jurisdiction of the District Court.

(217 Fed. 929)

FRANKLIN v. MONNING DRY GOODS CO.

(Circuit Court of Appeals, Fifth Circuit. November 30, 1914.)

No. 2592.

BANKRUPTCY (§ 407*)—DISCHARGE—DENIAL—GROUNDS—FALSE CREDIT STATEMENT—"FALSE."

Bankr. Act July 1, 1898, c. 541, § 14b (3), 30 Stat. 550 (Comp. St. 1913, § 9598), provides that the judge of a bankruptcy court shall hear an application for the bankrupt's discharge, and shall discharge him unless, among other things, he has obtained money or property on credit on a materially false statement in writing made by him to any person or his representative to obtain credit from such person. *Held*, that the word "false" in such section was not used in its vernacular sense of erroneous or untrue, but rather as untrue coupled with a lying intent, or intentionally untrue, and hence was not satisfied by a financial statement made by the bankrupt while away from home, and without his books and records, while he was in a hurry to return, because of the illness of his wife, from which statement he omitted an item of indebtedness amounting to $4,300 and also assets of an equal or greater amount (citing Words and Phrases, "False").

[Ed. Note.—For other cases, see Bankruptcy, Cent. Dig. §§ 729–731, 737, 738, 740–751, 758, 760, 761; Dec. Dig. § 407.*]

Appeal from the District Court of the United States for the Northern District of Texas; Edward R. Meek, Judge.

Application by Earl Clifford Franklin for a discharge in bankruptcy, to which the Monning Dry Goods Company filed objections. From an order overruling exceptions to the objections, and denying a discharge, petitioner appeals. Reversed and remanded, with directions.

D. M. Alexander, of Ft. Worth, Tex., for appellant.

R. Y. Prigmore, of Ft. Worth, Tex., for appellee.

Before PARDEE and WALKER, Circuit Judges, and CALL, District Judge.

CALL, District Judge. This is an appeal from the judgment of the District Court for the Northern District of Texas, denying the appellant a discharge in bankruptcy.

In this case the appellant was adjudged a bankrupt on February 15, 1912, and on January 6, 1913, filed his petition for a discharge, and on May 10th Monning Dry Goods Company filed specifications of objections to such discharge, alleging in such specifications that the bankrupt had in February, 1911, made a written statement of his assets and liabilities for the purpose of obtaining credit, and that such written statement was materially false in certain respects, to wit: The bankrupt had omitted certain of his debts in said statement, amounting in the aggregate to about $4,534. On September 17, 1913, the referee filed his report, finding that the statement of indebtedness of the bankrupt was incorrect, and at the time of making it he owed about $4,300 more than the statement showed, and thereupon reported his recommendation denying the discharge. On September 20th exceptions to the report of the referee were filed by the bankrupt, in which he at-

*For other cases see same topic & § NUMBER in Dec. & Am. Digs. 1907 to date, & Rep'r Indexes

tacked the correctness of the report of the referee in recommending the denial of the discharge on various grounds. This matter came on for hearing before the judge of the Northern district of Texas, who, having heard the parties, on the 13th of November, 1913, made his order confirming the report of the referee, overruling the exceptions to the same by the bankrupt, and denying the discharge. It is from this order that this appeal is taken.

The proofs taken by the referee, and considered by the District Judge in making his order overruling exceptions and denying the discharge, show that this written report made to the Monning Dry Goods Company was made at Ft Worth, away from his place of business, and away from his books. It was admitted by the bankrupt on the hearing before the referee that the debts found by the referee not to be included in his statement were at the time due and were not included in that written statement, but he claims that it was an oversight entirely, made by reason of his being at Ft. Worth with a sick wife, away from his books and business, and with no intention to deceive. This statement was made in February, 1911, and not read over at the time it was signed; that he had omitted from this statement certain assets larger in amount than the omitted debts, and was simply intended by him as an estimate of his debts. The proofs also show by the testimony of Monning, president of the appellant in this case, that credit was advanced upon the statements made, and that goods were thereafter sold on credit relying upon statements made in the writing. The referee found that the statement was materially false, and made in writing for the purpose of obtaining property on credit, and that property was obtained on credit upon said statement, and the only question to decide was whether or not said statement was so materially false as to bar the discharge of the bankrupt and defeat the protection of the statute. The exceptions filed by the bankrupt were aimed at this conclusion of the referee. The District Judge, in the opinion filed by him at the time of making the order denying the discharge, has this to say:

"But when there is taken into consideration the total of his liabilities as they are revealed in his statement and the amount of the items which he failed to include, it cannot be concluded that the bankrupt made a full and true statement, giving all of his liabilities and confidential debts as declared by him. The statement was made as a basis to secure an additional line of credit. It was accepted and relied on by the concern to whom it was made. It appears from the testimony in the record that the party accepting the statement and acting thereon would not have extended further accommodation and given additional credit, had the statement revealed the bankrupt's actual condition as to indebtedness. In my opinion the statement must be held to be materially false in the sense that phrase is used in section 14b (3) of the Bankruptcy Act."

It is therefore the duty of this court to construe the meaning of the words used in section 14b, cl. 3, of the Bankruptcy Act, as applied to the facts shown in this case. Section 14b (3) of the Bankruptcy Act is as follows:

"The judge shall hear the application for a discharge, * * * and discharge the applicant unless he has * * * obtained money or property on

credit upon a materially false statement in writing, made by him to any person or his representative for the purpose of obtaining credit from such person."

The facts found by the referee and the District Judge, unquestionably sustained by the proofs, are in short that the statement was in writing for the purpose of obtaining credit, and that property was obtained on credit on said statement, and that said statement was untrue in the material statement of his debts owing at the time of making said statement, as well as to the amount of his assets at said time to an amount equal or greater than the debts omitted. If the words used in the statute are to be construed as they evidently were by the District Judge in this case, there is a clear case made out for the denial of the discharge; and it is pertinent to the inquiry before us to remark that the false statement of the amount of assets, in omitting to state all of them, would equally bar a discharge, if such construction is to be given these words. It is just as material for the purpose of obtaining credit, and equally untrue. Yet we apprehend no one will be found to champion such a construction. We must therefore go further, and ascertain the meaning of the words used by Congress in the act, and the intention of the lawmakers in the use of the words.

This section provides for the discharge of the bankrupt in all cases except those mentioned in section 14b, cls. 1 to 6, inclusive, and is intended for the beneficent purpose of discharging the honest bankrupt from the burden of his debts and thus allow him to begin his business life anew. And this discharge is to be denied only where he is guilty of some one or more of the prohibited acts: (1) Guilty of an act punishable by imprisonment under the act. (2) Destroying, concealing, or failing to keep books with intent to conceal his financial condition. (3) As above set forth. (4) Removing, destroying, concealing, or permitting same, of any of his property within four months, with intent to hinder, delay, or defraud his creditors. (5) In voluntary proceedings, having been granted a discharge within six years. (6) Having refused to obey any lawful order or answer any material question approved by the court in the bankruptcy proceedings.

The intent of the lawmakers can to some extent be gathered by taking into consideration the entire section. There are many decisions construing the grounds for refusing a discharge, other than (3) now under consideration, that materially aid in arriving at the conclusion that it is not within the spirit of the objection that "false," as used in the act, means simply "untrue." This court, in Hardie v. Swafford Bros. Dry Goods Co., 165 Fed. 591, 91 C. C. A. 429, 20 L. R. A. (N. S.) 785, construing this clause of section 14b, uses this language:

"For these considerations we are disposed to deny that in the present bankruptcy law the discharge of the honest debtor is a mere incident which could have been omitted without impairing its symmetry and efficiency, and, on the contrary, to assert that the release of the honest, unfortunate, and insolvent debtor from the burden of his debts, and restore him to business activity, * * * is one of the main, if not most important, objects of the law."

In Gilpin v. Merchants' National Bank, 165 Fed. 607, at page 610, 91 C. C. A. 445, at page 448 (20 L. R. A. [N. S.] 1023), Circuit Judge

Gray, speaking for the Circuit Court of Appeals for the Third Circuit, uses this language:

"We fail to perceive any sufficient ground for denying to the third reason for refusing a discharge to the bankrupt, the general characteristic of personal misconduct, that attaches to all others, as set forth in said section of the Bankrupt Act. It would indeed be a harsh construction, and at variance with the general policy of the Bankrupt Act, that would make the conduct described in clause 3 an exception in this respect to the whole category of acts which may severally deprive the bankrupt of his privilege of discharge. It is a construction which should not unnecessarily be made."

And at page 611 of 165 Fed., page 449 of 91 C. C. A., 20 L. R. A. (N. S.) 1023, we find the following:

"But apart from the incongruity imported into this section of the Bankruptcy Act by such construction, it seems to us clear language of this third clause of section 14b requires that the written statement made by the bankrupt, for the purpose of obtaining credit, etc., should be knowingly and intentionally untrue in order to constitute a bar to discharge of the bankrupt. In other words, 'false statement' connotes a guilty scienter on the part of the bankrupt."

In Words and Phrases the word "false" is defined as follows:

"False means that which is not true, coupled with a lying intent."

"False, in jurisprudence, naturally imports something more than the vernacular sense of 'erroneous' or 'untrue.'"

Collier on Bankruptcy (9th Ed.) at page 352, says:

"Falsity of the statement must be proven; and so it is thought that it should be shown that the debtor knew it to be false, or at least did not know it to be true."

"Intention to deceive is always material as an element of proof, and by the weight of authority it is essential to prove such intent."

We therefore have reached the conclusion that the word "false," as used in clause 3 of section 14b of the Bankruptcy Act, means more than untrue, erroneous, or mistaken, but means "false" in the sense that it is "intentionally untrue."

There is no claim in this case that the untrue statement in the instant case falls under the ban of this construction. On the contrary, the incidents and circumstances surrounding the making of the statement would indicate that the bankrupt, believing himself in a sound financial condition, away from his books, with his sick wife away from home, and in a hurry to get back to her, made the statement as a general estimate, rather than an itemized statement of his exact financial condition, such as it might be reasonably supposed a man would make with all the data before him.

It appears from the record that the bankrupt in this case had two places of business, one at Vineville, and the other at another place some distance away, and it was stated in argument before us that there were two statements made setting out liabilities and assets. In the proceeding in this case the record only shows that one statement was relied upon, and is entirely silent as to the other statement. It may be that on another trial of this case the second or other statement will become very material in ascertaining whether, taking both statements together, either or both were "intentionally untrue." This ques-

tion, of course, would have to be settled at the retrial of the case hereinafter directed.

The case is therefore reversed, and remanded to the lower court for such further proceedings in consonance with this opinion as may be necessary. The costs of this appeal to be taxed against the appellee.

(217 Fed. 933)

BATEMAN et al. v. SOUTHERN OREGON CO. et al.

(Circuit Court of Appeals, Ninth Circuit. October 5, 1914.)

No. 2392.

1. COURTS (§ 328*)—JURISDICTION OF FEDERAL COURTS—AMOUNT OR VALUE IN DISPUTE—AGGREGATION OF CLAIMS.

Where a large number of complainants, each claiming a separate tract of land, although under the same act of Congress, unite in a suit to establish their claims, their causes of action are separate and distinct, and the value of the lands so separately claimed cannot be aggregated for the purpose of giving a federal court jurisdiction.

[Ed. Note.—For other cases, see Courts, Cent. Dig. §§ 890-896; Dec. Dig. § 328.*

Jurisdiction of federal courts as determined by amount in controversy, see notes to Auer v. Lombard, 19 C. C. A. 75; Tennent-Stribling Shoe Co. v. Roper, 36 C. C. A. 459; O. J. Lewis Mercantile Co. v. Klepner, 100 C. C. A. 288.]

2. PUBLIC LANDS (§ 117*)—CONCLUSIVENESS OF PATENT.

A patent to public lands from the United States is conclusive against all persons whose rights did not commence previous to its issuance, and the fact that it may have been issued through fraud, error, or irregularity does not subject it to attack by one who at the time had no interest in the land.

[Ed. Note.—For other cases, see Public Lands, Cent. Dig. § 324; Dec. Dig. § 117.*]

3. PUBLIC LANDS (§ 117*)—GRANT TO AID PUBLIC IMPROVEMENT—SUIT TO ENFORCE CONSTRUCTIVE TRUST.

By Act March 3, 1869, c. 150, 15 Stat. 340, a grant of land was made to the state of Oregon to aid in the construction of a military wagon road; the act providing that the lands should be sold "to any one person only in quantities not greater than one quarter section and for a price not exceeding" $2.50 per acre. The state granted the lands to a corporation, to be used in aid of the construction of the road. By a subsequent act of Congress (Act June 18, 1874, c. 305, 18 Stat. 80) it was provided that, on proof of the construction of the road, patents should issue to the state, or, if it had transferred its interest to a corporation, then to such corporation. Patents were thereafter issued to the corporation. Complainants joined in a suit to enforce the right of each to purchase a quarter section of the land at $2.50 per acre, alleging that it was held subject to a trust to make such sales in accordance with the terms of the grant. *Held* that, whatever might be the right of the United States to enforce such a trust, all others having then no interest in the lands were concluded by the patents and that complainants had no standing to attack the title which the patents purported to convey.

[Ed. Note.—For other cases, see Public Lands, Cent. Dig. § 324; Dec. Dig. § 117.*]

Appeal from the District Court of the United States for the District of Oregon; Chas. E. Wolverton, Judge.

---

*For other cases see same topic & § NUMBER in Dec. & Am. Digs. 1907 to date, & Rep'r Indexes

Suit in equity by D. F. Bateman and 112 others against the Southern Oregon Company, the State of Oregon, and Oswald West, Governor, and A. M. Crawford, Attorney General, of the State of Oregon. Decree for defendants, and complainants appeal. Affirmed.

Suit in equity by the appellants for an interpretation and construction of an act of Congress, entitled "An act granting lands to the state of Oregon to aid in the construction of a military wagon road from the navigable waters of Coos Bay to Roseburg, in said state," approved March 3, 1869 (15 Stat. p. 340), and various acts supplemental thereto; that the court finally and for all purposes wind up and settle the trust described in the complaint, fully ascertaining and definitely settling and adjusting the rights of all parties interested therein; for an injunction restraining logging operations on certain lands situated in the state of Oregon: and for the appointment of a receiver to collect and account for all moneys received by the appellees by reason thereof.

On March 3, 1869, Congress passed an act, entitled "An act granting lands to the state of Oregon to aid in the construction of a military wagon road from the navigable waters of Coos Bay to Roseburg in said state." The act provided as follows:

"Be it enacted by the Senate and House of Representatives of the United States of America in Congress assembled, that there be, and hereby is, granted to the state of Oregon, to aid in the construction of a military wagon road from the navigable waters of Coos Bay to Roseburg, alternate sections of public lands, designated by odd numbers, to the extent of three sections in width on each side of said road: Provided, that the lands hereby granted shall be exclusively applied to the construction of said road and to no other purpose, and shall be disposed of only as the work progresses: Provided, further, that the grant of lands hereby made shall be upon the condition that the lands shall be sold to any one person only in quantities not greater than one quarter section, and for a price not exceeding two dollars and fifty cents per acre: And provided further, that any and all lands heretofore reserved to the United States, or otherwise appropriated by act of Congress or other competent authority, be, and the same are hereby, reserved from the operation of this act, except so far as it may be necessary to locate the route of said road through the same, in which case the right of way to the width of one hundred feet is granted: And provided further, that the grant hereby made shall not embrace any mineral lands of the United States, or any lands to which homestead or pre-emption rights have attached.

"Sec. 2. And be it further enacted, that the lands hereby granted to said state shall be disposed of by the Legislature thereof for the purpose aforesaid, and for no other; and the said road shall be and remain a public highway for the use of the government of the United States, free from tolls or other charges upon the transportation of any property, troops, or mails of the United States.

"Sec. 3. And be it further enacted, that said road shall be constructed with such width, graduation, and bridge as to permit of its regular use as a wagon road, and in such other special manner as the state of Oregon may prescribe.

"Sec. 4. And be it further enacted, that the state of Oregon is authorized to locate and use in the construction of said road an additional amount of public lands, not previously reserved to the United States nor otherwise disposed of, and not exceeding six miles in distance from it, equal to the amount reserved from the operation of this act in the first section of the same, to be selected in alternate odd sections, as provided in section first of this act.

"Sec. 5. And be it further enacted, that lands hereby granted to said state shall be disposed of only in the following manner, that is to say, when the Governor of said state shall certify to the Secretary of the Interior that ten continuous miles of said road are completed, then a quantity of the land hereby granted, not to exceed thirty sections, may be sold, and so on from time to time, until said road shall be completed; and if said road is not completed within five years no further sales shall be made, and the lands remaining unsold shall revert to the United States: 'Provided, however, that the entire

amount of public land granted by this act shall not exceed three sections per mile for each mile actually constructed.

"Sec. 6. And be it further enacted, that the United States Surveyor General for the district of Oregon shall cause said lands, so granted, to be surveyed at the earliest practicable period after said state shall have enacted the necessary legislation to carry this act into effect."

On October 22, 1870, the Legislature of the state of Oregon passed the following act, entitled "An act donating certain lands to the Coos Bay Wagon Road Company":

"Whereas, the Congress of the United States, at the session beginning on the 7th day of December, 1868, passed an act donating lands to the state of Oregon: * * *

"Be it enacted by the Legislative Assembly of the state of Oregon:

"Section 1. That there is hereby granted to the Coos Bay Wagon Road Company all lands, rights of way, rights, privileges and immunities heretofore granted or pledged to this state by the act of Congress in this act heretofore cited, for the purpose of aiding said company in constructing the road mentioned and described in said act of Congress, upon the conditions and limitations therein prescribed.

"Sec. 2. There is also hereby granted and pledged to said company all moneys, lands, rights, privileges and immunities which may hereafter be granted to this state to aid in the construction of such road for the purposes, and upon the conditions and limitations mentioned in said act of Congress, or which may be mentioned in any further grants of money or lands to aid in constructing such road.

"Sec. 3. Inasmuch as there is no law upon this subject at the present time, this act shall be in force from and after its passage."

Laws Or. 1870, pp. 40–42.

On June 18, 1874, Congress passed the following act, entitled "An act to authorize the issuance of patents for lands granted to the state of Oregon in certain cases":

"Whereas, certain lands have heretofore, by act of Congress, been granted to the state of Oregon to aid in the construction of certain military wagon roads in said state, and there exists no law providing for the issuing of formal patents for said lands:

"Therefore, be it enacted by the Senate and House of Representatives of the United States of America in Congress assembled, that in all cases when the roads in aid of the construction of which said lands were granted are shown by the certificate of the Governor of the state of Oregon, as in said acts provided, to have been constructed and completed, patents for said lands shall issue in due form to the state of Oregon as fast as the same shall, under said grants, be selected and certified, unless the state of Oregon shall by public act have transferred its interests in said lands to any corporation or corporations, in which case the patents shall issue from the General Land Office to such corporation or corporations upon their payment of the necessary expenses thereof: Provided, that this shall not be construed to revive any land grant already expired nor to create any new rights of any kind except to provide for issuing patents for lands to which the state is already entitled." 18 Stats. p. 80, c. 305.

On February 12, 1875, the United States of America, pursuant to the act of Congress of June 18, 1874, above set forth, duly issued to the Coos Bay Wagon Road Company a patent covering and embracing 42,496.93 acres of the lands granted to the state of Oregon by the act of March 3, 1869; on March 18, 1876, a second patent was issued to the Wagon Road Company covering and embracing 1,080 acres of the lands; on November 8, 1876, a third patent was issued to the Wagon Road Company covering and embracing 61,111.53 acres of the lands; and on February 17, 1877, a fourth patent was issued to the Wagon Road Company covering and embracing 431.65 acres of such lands. The four patents thus issued by the United States to the Wagon Road Company covered, in the aggregate, 105,120.11 acres, and embraced all of the lands granted to the state of Oregon by the act of Congress of March 3, 1869.

On May 31, 1875, the Wagon Road Company granted to one John Miller, alias Ambrose Woodroof, all of the lands embraced in the patent first above referred to, with the exception of certain parcels thereof aggregating 6,963.34 acres, which prior to that time had been conveyed to other parties. Subsequently Miller conveyed the lands to Collis P. Huntington, Charles Crocker, Leland Stanford, and Mark Hopkins. On March 27, 1883, Crocker acquired all of the right, title, and interest of Huntington, Stanford, and Hopkins in the lands. On December 20, 1883, Crocker conveyed the lands to one W. H. Besse. On January 7, 1884, the Wagon Road Company conveyed to Besse all the lands embraced in the second, third, and fourth patents hereinabove referred to. On December 29, 1883, Besse conveyed the lands embraced in the first patent to one Gray, and the latter, on January 5, 1884, conveyed the lands to the Oregon Southern Improvement Company. On June 4, 1884, Besse conveyed to the last-named company direct all of the lands covered by the second, third, and fourth patents. On January 1, 1884, the Oregon Southern Improvement Company executed and delivered to the Boston Safe Deposit & Trust Company, as trustee, a certain mortgage or deed of trust covering all of the lands for which patents had been issued to the Wagon Road Company pursuant to the act of Congress of June 18, 1874, to secure the payment of certain bonds to be thereafter issued by the Oregon Southern Improvement Company. On December 28, 1886, William D. Rotch and Edward D. Mantell (who had succeeded the Boston Safe Deposit & Trust Company as trustees under the deed of trust or mortgage), instituted suit in the Circuit Court of the United States for the District of Oregon against the Oregon Southern Improvement Company to foreclose the mortgage or deed of trust. Such proceedings were thereafter had in the suit that on June 23, 1887, pursuant to an order of the court, one George H. Durham, as master thereof, sold to William J. Rotch and William S. Crapo all of the properties of the Oregon Southern Improvement Company, including the lands which that company had acquired by mesne and by direct conveyances from the Coos Bay Wagon Road Company, as hereinabove set forth; and on November 16, 1887, a deed was duly executed and delivered by the master to the grantees, conveying to the latter all of the right, title, and interest of the Oregon Southern Improvement Company in and to such lands. On December 14, 1887, Rotch and Crapo conveyed the lands to the Southern Oregon Company, one of the defendants herein, and the latter company now holds the legal title thereto and is in possession thereof.

It is alleged in the complaint filed by the plaintiffs that the act of Congress of March 3, 1869, granted all of the lands embraced therein to the state of Oregon in trust for the purposes therein set forth; that the state of Oregon, by virtue of accepting the grant of the lands from the United States, became and has ever since remained a cotrustee with the defendant Southern Oregon Company of all of the lands; that the true title to all of the lands is now in the state of Oregon, except such fraudulent and pretentious right as the defendant Southern Oregon Company unlawfully holds as an involuntary trustee of a constructive trust; that the United States has never, by public act or otherwise, directly or indirectly revoked or abrogated the express trust contained in the act of Congress of March 3, 1869, as to the state of Oregon, and the state of Oregon has never renounced the trust or denied it; and the trust remains in full force and effect, and is in the same legal position or situation, as to title, as it was on the 3d day of March, 1869. It is further alleged in the bill that the defendant Southern Oregon Company, by virtue of the acts hereinabove set forth, unlawfully asserts and assumes to exercise and enjoy an unconditional estate in fee simple in and to the lands granted to the state of Oregon, notwithstanding that the Southern Oregon Company, and each of its predecessors in interest, had full and complete knowledge of all the conditions and restrictions affecting the lands.

The bill contains an enumeration of the specific quarter sections of land applied for and claimed by each of the plaintiffs, and in that connection it is alleged that for each tract the claimant thereof had tendered to the Southern Oregon Company the sum of $2.50 per acre, and had demanded a deed therefor; that by virtue of their application for the lands the plaintiffs are, in relation to the trust created by the act of Congress of March 3, 1869, in

privity with the state of Oregon, trustee of all such lands; that the defendant Southern Oregon Company, and all its predecessors in interest, accepted and assented to all the terms, restrictions, limitations, and conditions contained in the acts of Congress hereinabove set forth, and the act of the Legislature of the state of Oregon approved October 22, 1870; that the defendant Southern Oregon Company, and the state of Oregon, are bound by the terms, conditions, and restrictions contained in and created by the express trust set forth in the act of Congress of March 3, 1869; that by virtue of the matters and things set forth in the bill the defendant Southern Oregon Company is an involuntary trustee of all the lands involved in this suit, and such lands constitute and are held as a constructive trust by the Southern Oregon Company, with no title or estate in or to the same whatsoever, except such title as it has acquired by fraud.

The plaintiffs asked for an interpretation and construction of the various acts set forth in the bill; that the court finally and for all purposes wind up and settle the trust described in the complaint, fully ascertaining and definitely settling and adjusting the rights of all parties interested therein; that an injunction issue restraining certain logging operations which, as is alleged in the bill, are being conducted on portions of the lands involved; and for the appointment of a receiver to investigate such operations and to collect and account for all moneys obtained by the Southern Oregon Company by reason thereof.

Motions to dismiss the bill were interposed by the defendants, respectively. The motions were granted, and a judgment entered dismissing the cause, from which judgment the plaintiffs appeal to this court.

T. S. Minot, of San Francisco, Cal. (E. L. C. Farrin, of San Francisco, Cal., of counsel), for appellants.

Dolph, Mallory, Simon & Gearin, of Portland, Or., for appellee Southern Oregon Co.

A. M. Crawford, Atty. Gen., and J. W. Crawford, Asst. Atty. Gen., for appellee State of Oregon.

Before GILBERT, ROSS, and MORROW, Circuit Judges.

MORROW, Circuit Judge (after stating the facts as above). [1] 1. The plaintiffs in this case number 113. They each claim a separate and distinct quarter section of land, of 160 acres each, within a larger tract containing 105,120.11 acres claimed by the defendant the Southern Oregon Company. The latter company is the successor in interest through mesne conveyances of the Coos Bay Wagon Road Company, the original grantee, under patents issued to that company by the United States in the years 1875, 1876, and 1877, pursuant to certain acts of Congress providing for the construction of a military wagon road from the navigable waters of Coos Bay to Roseburg, in Oregon. The purpose of this suit is to compel the defendant the Southern Oregon Company, as the successor in interest in the Coos Bay Wagon Road grant, to convey all its right, title, and interest in and to the separate tracts of land claimed by the respective plaintiffs, as set forth and described in the bill of complaint. It is not claimed that any plaintiff has any interest in the land in suit other than the claim asserted to the specific tract. It is alleged in the bill of complaint that the value of each individual claim of 160 acres of land involved in the suit and claimed by the respective plaintiffs is over the sum of $2,000, exclusive of interest and costs. The purpose of this allegation was to give the court jurisdiction of the case under the statute as it existed prior to January 1, 1912. The bill of complaint in this case was filed on July

29, 1913. The Judicial Code (Act March 3, 1911, 36 Stats. 1087, c. 231 [Comp. St. 1913, § 968 et seq.]) went into effect on January 1, 1912. It is provided in section 24 of this Code (Comp. St. 1913, § 991) that the District Court shall have jurisdiction "of all suits of a civil nature, at common law or in equity, * * * where the matter in controversy exceeds, exclusive of interest and costs, the sum or value of three thousand dollars, and (a) arises under the Constitution or laws of the United States. * * *"

This case involves the construction of certain acts of Congress. Assuming that the case, therefore, arises under the laws of the United States, the question is: Does the value of the land in controversy exceed, exclusive of interest and costs, the sum or value of $3,000? The bill of complaint does not so allege. Is it sufficient that by mathematical calculation the aggregate value of the plaintiffs' claims as alleged in the complaint may equal or exceed that amount, and are the plaintiffs' claims of the character that they may be combined together into an aggregate sum sufficient to confer jurisdiction upon the District Court?

The rule with respect to the amount in controversy for jurisdictional purposes was stated by Mr. Justice Bradley in Clay v. Field, 138 U. S. 464, 479, 11 Sup. Ct. 419, 425 (34 L. Ed. 1044), as follows:

> "The general principle observed in all is that if several persons be joined in a suit in equity or admiralty, and have a common and undivided interest, though separable as between themselves, the amount of their joint claim or liability will be the test of jurisdiction; but where their interests are distinct, and they are joined for the sake of convenience only, and because they form a class of parties whose rights or liabilities arose out of the same transaction, or have relation to a common fund or mass of property sought to be administered, such distinct demands or liabilities cannot be aggregated together for the purpose of giving this court jurisdiction by appeal, but each must stand or fall by itself alone."

This rule has been followed in a number of cases, and has been restated in the recent case of Troy Bank v. Whitehead, 222 U. S. 39, 40, 32 Sup. Ct. 9, 56 L. Ed. 81, as follows:

> "When two or more plaintiffs, having separate and distinct demands, unite for convenience and economy in a single suit, it is essential that the demand of each be of the requisite jurisdictional amount; but when several plaintiffs unite to enforce a single title or right, in which they have a common and undivided interest, it is enough if their interests collectively equal the jurisdictional amount."

This rule was followed by members of this court in the recent case of Simpson v. Geary, 204 Fed. 507, 510, in the District Court of Arizona, convened under section 266 of the Judicial Code (Comp. St. 1913, § 1243).

It is clear that the plaintiffs' claim of federal court jurisdiction does not come within this rule. They have not a common, undivided interest in the land in controversy. Their claims are separate and distinct, and the only reason for combining them in one case is that of convenience, and because they form a class of parties whose rights are alleged to have arisen out of the same transaction, and have relation to a common mass of property sought to be administered. This is not sufficient to justify the court in combining their separate claims in one aggregate amount for the purpose of conferring jurisdiction upon the

District Court. But it is possible that this objection to the bill of complaint might be cured by amendment. We will, therefore, proceed to consider a more serious objection to the bill.

[2, 3] 2. It is contended on behalf of the plaintiffs that the proviso contained in the act of Congress of March 3, 1869, "that the grant of lands hereby made shall be upon the condition that the lands shall be sold to any one person only in quantities not greater than one quarter section, and for a price not exceeding two dollars and fifty cents per acre," was a grant to the state of Oregon in trust for the benefit of third parties; that the Southern Oregon Company, having acquired this trust property with notice of such trust, is bound by it and may be compelled to execute it; that the plaintiffs having before the commencement of this suit tendered to the defendant the Southern Oregon Company the sum of $2.50 per acre for the several tracts of land mentioned in the complaint, they have become beneficiaries of the trust and are entitled to a decree of the court compelling the defendant the Southern Oregon Company to quitclaim and release to the respective claimants all its right, title, and interest and estate of every nature whatsoever, to the lands described in the complaint. It is not alleged in the bill that the military wagon road provided for in the act of March 3, 1869, was not constructed and completed in accordance with the terms therein provided; nor is it charged that the lands granted were not applied to the construction of the road. But it sufficiently appears from the act of Congress of June 18, 1874, a copy of which is attached to the complaint, that the road was so constructed and completed, and that the land was applied to its construction. That act provided:

"That in all cases when the roads in aid of the construction of which said lands were granted are shown by the certificate of the Governor of the state of Oregon, as in said act provided, to have been constructed and completed, patents for said lands shall issue in due form to the state of Oregon as fast as the same shall, under said grants, be selected and certified, unless the state of Oregon shall by public act have transferred its interests in said lands to any corporation or corporations, in which case the patents shall issue from the General Land Office to such corporation or corporations upon their payment of the necessary expenses thereof."

As the patents for the lands granted under the act of March 3, 1869, were issued to the Coos Bay Wagon Road Company after the passage of the act of June 18, 1874, the presumption is that they were issued in accordance with the terms of the act; that the state of Oregon by the public act of October 22, 1870, a copy of which is also attached to the bill of complaint, had transferred its interest in the lands to that corporation, and that the lands had been earned by the Wagon Road Company by the timely construction and completion of the wagon road as required by the act of March 3, 1869. We shall therefore assume it to be a fact apparent on the face of the bill of complaint that the military wagon road provided by the act of March 3, 1869, was constructed and completed in accordance with the terms of that act, and that the lands granted were applied to its construction.

What, then, is the interest of the plaintiffs in this grant? It does not appear from the bill of complaint that the plaintiffs or any of their predecessors aided or in any manner assisted in the construction of the wagon road; nor does it appear that they were ever settlers upon

the lands granted, either at the time of the grant, or at the time patents were issued, or at any time; nor does it appear that the plaintiffs, or any of their representatives, ever applied to the state of Oregon, or to the United States, to enter or purchase any of the lands described, under the terms of the grant or otherwise. The claim of the plaintiffs is that the Coos Bay Wagon Road Company, in violation of the proviso of the granting act limiting the number of acres to be sold to any one person to one quarter section, executed and delivered to certain parties deeds of conveyance to the quantities of land described in the patents in excess of one quarter section to one person; that the plaintiffs have tendered the defendant the Southern Oregon Company the sum of $2.50 per acre for their respective quarter sections of land, and have demanded conveyances of the same from that defendant; that the defendant refused to accept the sum offered, and has refused to execute and deliver deeds as demanded.

The grant to the state of Oregon was in aid of the construction of a military wagon road from the navigable waters of Coos Bay to Roseburg. The state conveyed this grant, together with any additional grant that might thereafter be made to the state, to the Coos Bay Wagon Road Company, "for the purpose of aiding said company in constructing the road mentioned and described in the act of Congress, upon the conditions and limitations therein prescribed." No further or other administration of the grant was assumed by the state, and when Congress passed the act of June 18, 1874, providing for the issuance of patents for the lands granted, it recognized that the state had discharged the trust by passing the grant along to the Coos Bay Wagon Road Company. The patents for the lands were thereupon issued by the Land Office to the Coos Bay Wagon Road Company. This was in effect a ratification by Congress of the grant by the state to that company, and the state was thereupon discharged from further administration of the grant, and whatever trust remained was a matter wholly between the United States and the Wagon Road Company and its grantees. The plaintiffs' alleged rights were not asserted until 36 years after the issuance of the last of the four patents conveying the title to the Wagon Road Company. They were therefore not in privity with that title when it was conveyed, and they have since acquired no rights making them privy to the prior title held by the defendants. They are strangers to that title and whatever trust it carries.

The law upon this subject was declared by Chief Justice Marshall, speaking for the Supreme Court, in the case of Hoofnagle v. Anderson, 7 Wheat. 212, 5 L. Ed. 437. In that case, as in the present case, the suit was in equity to obtain a decree for the conveyance of a tract of land to which the defendant held a patent dated the 9th day of October, 1804. The plaintiffs claimed under an entry of the same land made on the 28th day of May, 1806, and consequently 18 months after the date of the defendant's patent. The plaintiffs contended, however, that the patent ought not to stand in their way because it was obtained contrary to law, being founded on a warrant which had been issued by fraud or mistake. The warrant had been issued by the commonwealth of Virginia upon military services rendered the state by the defend-

ant's original predecessor in interest. The warrant erroneously recited that the military services had been rendered in the continental line, whereas it had been rendered in the state line. It was contended on behalf of the plaintiffs that their equity commenced before the legal title of the defendant was consummated, and their pre-existing rights under the statute were impaired by his intrusion into military lands reserved for the plaintiffs. It was contended, further, that the person under whom they claimed had a right to elect among all the vacant lands on the reserved territory, and this right of election had been narrowed by the defendant's patent. Chief Justice Marshall, speaking of the patent in the case, said:

"It is not doubted that a patent appropriates land. Any defects in the preliminary steps, which are required by law, are cured by the patent. It is a title from its date, and has always been held conclusive against all those whose rights did not commence previous to its emanation. * * * If a patent has been issued irregularly, the government may provide means for repealing it; but no individual has the right to annul it, to consider the land as still vacant, and to appropriate it to himself."

The decree of the lower court sustaining the patent and refusing the plaintiffs a decree for a conveyance was accordingly affirmed.

The recent case of Burke v. Southern Pacific Railroad Co., 234 U. S. 669, 34 Sup. Ct. 907, 58 L. Ed. 1527, was also a suit in equity wherein the plaintiff claimed title to mineral lands under certain mining locations made pursuant to the mining laws of the United States. The lands had 15 years previously been patented to the Southern Pacific Railroad Company under a congressional grant which excluded all mineral land other than iron and coal lands. The patent contained a clause providing:

"Excluding and excepting all mineral lands, should any such be found, in the tracts aforesaid; but this exclusion and exception, according to the terms of the statute, shall not be construed to include coal and iron lands."

The plaintiff alleged in the bill of complaint that it was not within the power of the United States to dispose of the mineral lands described in the patent to the Southern Pacific Railroad Company; that said lands had been segregated from the public domain and the beneficial title reserved for mining locators, while the legal title was being held in trust for said locators and their successors. The court was accordingly asked to protect plaintiff's rights by injunctive process controlling the patent issued by the government. Demurrers to the bill were sustained, and the bill dismissed. Upon appeal to this court a number of questions were certified to the Supreme Court of the United States, among others the following:

"Does the fact that the appellant was not in privity with the government in any respect at the time when the patent was issued to the railroad company prevent him from attacking the patent on the ground of fraud, error, or irregularity in the issuance thereof as was alleged in the bill?"

To this question the court answered, "It does," citing Hoofnagle v. Anderson, supra, and other cases in support of that answer. In our opinion the cases cited have determined the law applicable to the present case.

The case of Little Rock & Ft. Smith R. R. Co. v. Howell, 31 Ark. 119, 127, cited by counsel for the plaintiffs in support of his position, does not state any proposition contrary to the law of these cases. In the case cited the Congress of the United States, by Act Feb. 9, 1853, c. 59, 10 Stat. 155, granted lands to the states of Arkansas and Missouri to aid in the construction of a railroad from a point on the Mississippi river, opposite the mouth of the Ohio river, in the state of Missouri, via Little Rock, to the Texas boundary line, near Fulton, in Arkansas. The act provided that where the United States had sold any of the lands granted, or where the right of pre-emption had attached to any of the lands in the grant, other contiguous lands might be selected by the state in lieu of the lands sold or pre-empted. This is a familiar provision which has been incorporated in all subsequent railroad land grants. The Legislature of the state of Arkansas, by act approved January 16, 1855, amended November 26, 1856, conveyed the lands in that state to the Cairo & Fulton Railroad Company upon certain conditions and limitations. A similar grant was made to the Little Rock & Ft. Smith Branch Road. Among other conditions contained in the grant was one providing that:

"Every person who, on the 9th day of February, 1853, occupied by residence and cultivation thereon any tract of land comprised in the grant made by virtue of and under the provisions of said act of Congress of February 9, 1853, may purchase from" the railroad company, "at two dollars and fifty cents per acre, the legal subdivisions of such land as shall include his residence and actual improvements, not to exceed one quarter section, by complying with the following conditions," etc.

The grantees under this act failed to construct the railroad as required, and the Legislature, by act dated February 1, 1859, continued the grant under similar conditions and limitations as to prior settlers, among others that of the right of prior occupants to purchase land under the continued grant and extending such right to a later date. The act provided that:

"Every person who, on the 1st day of November, 1858, resided on or cultivated any improvement on any of the land comprised in the grant made by virtue of the act of Congress, approved February 9, 1853, may purchase from" the railroad company "at two dollars and fifty cents per acre, one hundred and sixty acres, which may include the actual residence, or the farm of such person, as he or she chooses to elect, by complying with the conditions prescribed," etc.

The plaintiff in the case, one Howell, on the 1st day of November, 1858, resided on and cultivated a tract of 126.54 acres within the grant made by Congress to the state of Arkansas, and within the grant to the Little Rock & Ft. Smith Branch Road. He applied to that railroad company to purchase this tract of land, offering the price of $2.50 per acre. It was objected that, by reason of the omission of the name of the Little Rock & Ft. Smith Branch Road from the restrictive clause of the act, that road was not bound by it. The court held that the act was clearly intended to include that road, and that, having accepted the grant, it was bound by its conditions, using the language quoted by counsel for the plaintiffs in this case, as follows:

"The provision conferring on occupants the right to purchase 160 acres, including their improvements, at $2.50 per acre, was a just and reasonable one, the price so fixed being twice that at which the government offered them previous to the grant to the state, and the appellant, accepting the grant upon the terms and conditions imposed, must be held to abide by and perform them."

There is nothing in this case supporting plaintiffs' contention. Aside from the question whether the Little Rock & Ft. Smith Branch Road was bound by the provision in the grant in which its name was omitted, there was no controversy as to the right of a prior settler under the general grant to purchase the land at $2.50 per acre. The beneficiaries under the statute were distinctly pointed out and identified by their prior occupancy of the land held by them, and the plaintiff, claiming as such beneficiary, connected himself with the original source of title prior to the grant to the railroad company. The cases admitting a right of action against a subsequent grantee under such a statute and under such circumstances are too numerous to be cited; but they do not aid the plaintiffs in this case. This is not—

"a suit to have one to whom a patent has been issued declared a trustee for another who at the time of its issue had acquired such a right to the land as to entitle him to that form of equitable relief." Burke v. Southern Pacific R. R. Co., supra.

The plaintiffs were not prior occupants or holders of the lands claimed by them, and they have not otherwise connected themselves with the original source of title. Whatever trust remains to be enforced may be determined by a suit on the part of the United States against the holders of the legal title, and it appears from the bill of complaint that such a suit has been commenced and is now pending in the United States District Court for the District of Oregon, having been brought under resolution of Congress of April 30, 1908, authorizing and directing the Attorney General of the United States to institute and prosecute such a suit.

The decree of the lower court is affirmed.

(217 Fed. 943)

BERGDOLL v. HARRIGAN.

(Circuit Court of Appeals, Third Circuit. November 16, 1914.)

No. 1851.

BANKRUPTCY (§ 306*)—APPEAL—REVIEW—HARMLESS ERROR—ADMISSION OF EVIDENCE.

In an action by the trustee of a bankrupt corporation to recover as a voidable preference a sum paid by the bankrupt a week before the bankruptcy to defendant, who until a day or two before had been its president, the admission in evidence, as bearing on the questions of insolvency and defendant's knowledge or means of knowledge, of the inventory and appraisement made in the bankruptcy proceeding, was not prejudicial to defendant, where plaintiff also introduced a witness who, testifying from his own knowledge, aided only by the inventory, placed a valuation on the property at the time of the payment, as assets of a going concern, of

*For other cases see same topic & § NUMBER in Dec. & Am. Digs. 1907 to date, & Rep'r Indexes

nearly double the amount of the appraisement, which thereupon became immaterial, since plaintiff was bound by the valuation made by his own witness.

[Ed. Note.—For other cases, see Bankruptcy, Dec. Dig. § 306.*]

In Error to the District Court of the United States for the Eastern District of Pennsylvania; J. Whitaker Thompson, Judge.

Action by Frank A. Harrigan, trustee in bankruptcy of the Louis J. Bergdoll Motor Company, against Erwin R. Bergdoll. Judgment for plaintiff, and defendant brings error. Affirmed.

Joseph Gilfillan, of Philadelphia, Pa., for plaintiff in error.

Joseph W. Catherine and Frank A. Harrigan, both of Philadelphia, Pa., for defendant in error.

Before BUFFINGTON, McPHERSON, and WOOLLEY, Circuit Judges.

WOOLLEY, Circuit Judge. This action was brought by the trustee of the Louis J. Bergdoll Motor Company, bankrupt, hereinafter referred to as the Company, against Erwin R. Bergdoll, at one time a creditor of the Company, and hereinafter called the defendant, to recover from him the sum of $31,270, which it is alleged he received from the Company as a preferential payment within the meaning of the Bankruptcy Act. The jury rendered a verdict for the plaintiff for the full amount of the claim and interest.

Of the several assignments of errors, those which require a statement of our conclusions are that the trial court erred, first, in refusing to instruct the jury to return a verdict for the defendant; and second, in admitting in evidence the inventory and appraisement of the bankrupt estate.

It appears from the testimony that the Louis J. Bergdoll Motor Company was incorporated on the 18th day of March, 1912, and engaged in the manufacture and sale of automobiles. Its capital stock consisted of 3,000 shares, of which Louis J. Bergdoll, its president, held 2,998 shares. On December 12, 1912, Charles A. and Erwin R. Bergdoll, brothers of Louis J. Bergdoll, were negotiating with Louis J. Bergdoll for the purchase of his stock in the Company, and were appointed by him an executive committee to manage the Company's business. Upon assuming those duties, they, or one or the other of them, were furnished with a statement of the financial standing of the concern under date of December 1st preceding, which showed the net assets then to have been something over $113,000. On January 8, 1913, the 2,998 shares of the capital stock of the Company owned by Louis J. Bergdoll were transferred by him to his brother Erwin R. Bergdoll, the defendant, for the consideration of $1, and thereafter within the same month Erwin R. Bergdoll became president, and together with his brothers, Charles and Grover, became a director of the Company, from which time until March 7, 1913, the defendant with his last-named brothers managed and controlled the business and affairs of the Company.

*For other cases see same topic & § NUMBER in Dec. & Am. Digs. 1907 to date, & Rep'r Indexes

Statements of resources and liabilities, as well as of profits and losses, were made by the bookkeeper under dates of January 1, February 1, and March 1, 1913, showing net assets of the Company on those dates to have been about $90,000. Between January 15 and February 25, 1913, the defendant loaned the Company on open account, by several payments, sums of money aggregating $31,270, and on February 27th thereafter the loan account was closed and notes of the Company were given the defendant for the amount of each individual loan. The funds so loaned were disbursed in the conduct of the business of the Company and commingled with its assets, and no effort was made at the trial by the defendant to trace them into any of the assets in the possession of the Company when the alleged preferential payment was made, or into assets which subsequently came into the possession of the receiver or the trustee of the Company after the filing of the petition in bankruptcy.

On March 5, 1913, the defendant transferred 2,997 of his shares of stock to his mother, Emma C. Bergdoll, and the remaining shares of stock were transferred to individuals who neither purchased them nor were cognizant of the fact that the shares had been transferred to them; the transfer being effected and the new certificates being signed by the defendant, Erwin R. Bergdoll, president, and countersigned by Charles A. Bergdoll, treasurer, of the Company. On March 7, 1913, the defendant and his brothers resigned as officers and directors of the Company, and the three persons to each of whom one share of stock had been issued on March 5th, were elected directors in their places. These were ignorant of the fact that they were stockholders and of their election as directors until some period thereafter, two of them never having attended a meeting of stockholders or of the board of directors of the Company.

On Saturday and Sunday, March 8th and 9th, following, motor cars in course of construction and motor parts to the value of $31,638.25 were transferred from the Company's plant to the premises of another concern, known as the Bergdoll Machine Company, then owned by the defendant, the transfer being made without authority of the Board of Directors of the Motor Company and without knowledge of its officers. On Monday, March 10th, being the day following the day of the transfer of the cars and parts, an employé of the Machine Company handed an employé of the Motor Company a memorandum of the merchandise transferred to the Machine Company, showing the price at which it was purchased or taken over, and delivered to him the Machine Company's check in payment therefor, which was at once deposited in bank to the credit of the Motor Company. The Motor Company thus being in funds, the employé of the Machine Company instructed the employé of the Motor Company to make out a check to the defendant in payment of the notes of the Motor Company held by the defendant. This was done, and in this way it is claimed that Erwin R. Bergdoll, the defendant, secured from the Motor Company the return of the money which he had loaned it.

The alleged preferential payment was made on March 10, 1913, the petition in bankruptcy was filed against the Motor Company on March

17, 1913, and the Company was adjudged bankrupt on April 11, 1913. As evidence of its insolvency, and of the defendant's knowledge of its insolvency, and of the preferential character of the payment at the time it was made, there was introduced testimony showing that the Company was without credit, that its creditors were dunning it for overdue accounts, that a very considerable portion of its accounts collectible was bad, and that its physical assets, carried upon the books at their cost price, were old, obsolete, and depreciated in value. It was further shown that, while the assets of the Company were approximately $91,000, its known liabilities amounted to $167,000, making a deficit of $75,497.88, to all of which information it is claimed the defendant had access, and with all of which it is alleged he was entirely familiar.

Opposed to this testimony, the defendant, for his defense, relied chiefly upon evidence of his ignorance and lack of opportunity to know of the Company's insolvency and of the preferential character of the payment.

The trial judge submitted two issues to the jury: First, whether the Company was insolvent on the date of the alleged preferential payment; and second, whether the defendant, from the surrounding circumstances, knew that the Company was insolvent, or had reasonable cause to believe that it was insolvent, and that the payment of its debt to him would give him a preference over its other creditors.

Without giving to the testimony an extended consideration in this opinion, it is entirely clear that the court below committed no error in refusing to withdraw from the jury the questions of the Company's insolvency and of the defendant's knowledge of an intended preference in paying its debt to him.

The remaining question for consideration is whether the trial court erred in admitting in evidence the inventory and appraisement of the bankrupt estate of the Motor Company. The most pertinent objections made by the defendant to the admission of the inventory and appraisement are that the inventory was made up of personal property that had ceased to be a part of a live and going concern, and that the appraisal thereof was of property that had then become dead, and that, as the appraisers were not in court in the action against him, the defendant was deprived of a right to cross-examine them upon their appraisement.

Oliver A. Bickel, an employé of the Motor Company, produced as a witness for the plaintiff, testified that he was familiar with the quantity, character, and value of the personal assets and stock of the Motor Company at and before the time of its failure; that in February, 1914, at the request of counsel for the trustee, he made an estimate of the value of the stock which the Motor Company had in March, 1913, using the inventory and appraisement of the appraisers in the bankruptcy proceeding only to refresh his memory of the quantity and character of the stock then on hand, and estimated the same was worth at that time about $65,000. This testimony respecting the value of the Company's assets on that date, made with the inventory and appraisement before the witness, and with the assistance which

the data thereby supplied him as to the quantity, but not the value of the stock on hand, and considered with respect to its value as an asset of a going concern at the crucial period of March, 1913, was given and received in evidence. This testimony was produced by the plaintiff, and formed the basis of his claim of the Motor Company's insolvency on March 10, 1913, and by that testimony the plaintiff was bound, notwithstanding the value of the same assets was shown by the inventory and appraisement made in the bankruptcy proceedings to amount only to the sum of $36,621.49.

The defendant neither cross-examined the witness with relation to the figures of the inventory and appraisement nor controverted them by testimony of his own. The defendant may have failed to do this because it was clearly to his advantage to accept the higher figures placed upon the assets by Bickel than to have engaged in a controversy concerning the lower figures placed upon them by the inventory and appraisement. The testimony of Bickel in giving to the Company's assets a value as parts of a live and going business in March, 1913, thus met the defendant's first objection that the inventory and appraisement was of stock that was dead; and his second objection was met by the fact that the plaintiff was bound by the higher figures given by his witness Bickel as to the Company's assets at the time of the alleged preferential payment, without regard to the lesser figures of the appraisement. Therefore the lack of opportunity afforded the defendant to cross-examine the appraisers upon a matter that had ceased to be controlling, in view of the testimony of Bickel, deprived the defendant of no right and did him no prejudice. And this the defendant must himself have thought, in view of his opportunities to cross-examine Bickel upon the figures of the appraisement, and to controvert them by testimony of his own, of neither of which opportunities did he avail himself.

We find nothing in the conduct of the trial below that deprived the defendant of any right or subjected him to any prejudice.

The judgment below is affirmed.

(217 Fed. 947)

HERMANN v. HALL et al.†

(Circuit Court of Appeals, Ninth Circuit. October 5, 1914.)

No. 2371.

PRINCIPAL AND AGENT (§ 69*)—PURCHASE OF PROPERTY BY AGENT—SUIT TO SET ASIDE.

Complainant and his wife authorized defendant, as their agent, to sell certain land of the wife for $4,000, and sent him a power of attorney to convey the same. He made a sale to two purchasers for $4,400, took their note for $100, to apply on the price until the title was examined and approved, and gave them a receipt describing the land and terms of sale. Meantime they decided to form a syndicate to take the land, but when the time came to make the payment one member, who was to take a one-twelfth interest, failed to do so, and at the solicitation of one of the purchasers defendant took his place. The price received was the full value

*For other cases see same topic & § NUMBER in Dec. & Am. Digs. 1907 to date, & Rep'r Indexes

† Rehearing denied March 8, 1915.

of the land at the time. *Held*, that the rule that a purchase by an agent is voidable, regardless of the price paid, had no application; that when the purchasers gave their note and took the receipt a binding contract of sale was made, and defendant's agency substantially ended; that defendant's purchase was not from his principal, but from the original purchasers; and, in the absence of actual fraud, complainant was not entitled to have the sale set aside in equity.

[Ed. Note.—For other cases, see Principal and Agent, Cent. Dig. §§ 130-145; Dec. Dig. § 69.*]

Appeal from the District Court of the United States for the District of Oregon; R. S. Bean, Judge.

Suit in equity by Christian Hermann against John F. Hall and others. Decree for defendants, and complainant appeals. Affirmed.

Suit in equity by plaintiff to quiet title to certain real property situated in Coos county, Or., and to set aside and have declared null and void, on the ground of alleged fraud, certain deeds purporting to convey the legal title to the land in controversy to the defendants.

On November 7, 1903, the plaintiff, Christian Hermann, and his wife, Dora Hermann, residents of the German Empire, made, executed, and delivered to the defendant John F. Hall a power of attorney, wherein the latter was appointed their true and lawful attorney, and as such, among other things, was empowered to sell and dispose of certain properties owned by Dora Hermann, situated in the state of Oregon, included in which was the property involved in this suit, more particularly described as the N. E. ¼ and lot 2 and the W. ½ of the S. E. ¼ of section 36, township 25 S., of range 13 W. of the Willamette meridian. The defendant entered upon his duties as such attorney and continued to act in that capacity from the date of his appointment until the death of Dora Hermann on the 18th day of September, 1905. On that date, Christian Hermann, the plaintiff in this suit, as the sole heir at law of the decedent, became, under the laws of the German Empire, the owner of and entitled to the possession of all property of which his wife was seised at the time of her death.

Some time in the month of May, 1905, the defendant, as the attorney and agent of Dora Hermann and her husband, under the power of attorney executed by them to him, entered into negotiations with Henry Sengstacken and L. D. Smith for a sale of the property above described to them. It appears from certain correspondence exchanged between the defendant and his principals that he had been authorized to sell the land for $4,000. No agreement for a sale of the property was reached between the defendant and Sengstacken and Smith until May 17, 1905, on which date the transaction was closed; Sengstacken and Smith agreeing to pay for the property the sum of $4,400. The purchasers gave to the defendant their promissory note for the sum of $100, payable in 10 days after date, to be applied on the purchase price of the property, and the defendant gave to the purchasers a receipt therefor. The receipt was not introduced in evidence, for the reason that it could not be found; but Sengstacken testified that it described the lands and the terms of the sale. The testimony of the parties tended to show that the terms of the sale were that one-half of the purchase price should be paid in cash, and the remainder in one year; the unpaid balance to draw interest at the rate of 6 per cent. per annum and to be evidenced by a note secured by a mortgage on the property. The cash payment of one-half of the purchase price was to be made, and the deed, mortgage, and note delivered, after the purchasers had had a reasonable time within which to examine the title to the land.

It also appears from the testimony (which in all substantial respects is without conflict) that after agreeing to purchase the property Sengstacken and Smith proceeded to interest other persons in the transaction, and that some time in the month of July, 1905, Sengstacken informed the defendant that he was going to take some other parties in with him and was going to form a

*For other cases see same topic & § NUMBER in Dec. & Am. Digs. 1907 to date, & Rep'r Indexes

syndicate for the purchase of the land. The syndicate, as originally formed, together with the interest which each member thereof was to have in the property, was as follows: Henry Sengstacken, three-twelfths; L. D. Smith, three-twelfths; Stephen C. Rogers, two-twelfths; J. J. Clinkinbeard, two-twelfths; D. L. Rood, one-twelfth; and Herbert Rogers, one-twelfth.

The title to the property having been passed upon satisfactorily by the attorneys for the purchasers, August 30, 1905, was fixed upon as the date for making cash payment of one-half of the purchase price and delivering the deed, mortgage, and note. On the morning of that date, Herbert Rogers, who had agreed to take a one-twelfth interest in the property, informed Sengstacken that he had "changed his mind" about taking an interest for the reason that he did not consider it a good investment. During the morning of that day S. C. Rogers and Clinkinbeard went to the office of the defendant, and each paid to him the sum of $366.65, representing their proportionate interests in one-half of the purchase price of the property. Later in the day Sengstacken went to the office of the defendant and informed him that Herbert Rogers had refused to take the one-twelfth interest in the property. He then said to the defendant: "What's the matter with you taking his interest? You are getting a commission out of this for selling this land, and you might as well take this to close it up." The defendant replied that he would talk the matter over with his brother, James T. Hall, who was also his law partner. Sengstacken then paid to the defendant the sum of $1,466.70, which represented his three-twelfths interest in one-half of the purchase price, the three-twelfths interest of Smith, and the one-twelfth interest of Rood. The next morning Sengstacken again saw the defendant, and was informed by the latter that he had talked the matter over with his brother, and that they had concluded that they would purchase the one-twelfth interest in the property which Herbert Rogers had refused to take.

Sengstacken testified that he had no knowledge or notice of any kind, prior to August 30, 1905, that the defendant was to take any interest in the property. Smith testified to the same effect; and Stephen C. Rogers, D. L. Rood, Herbert Rogers, and J. J. Clinkinbeard testified that they did not know and were not informed that the defendant had taken an interest in the property for periods varying from one month to one year after the agreement had been consummated and the one-half of the purchase price paid in cash.

It was agreed that the title to the property should be placed in the name of the Title Guarantee & Abstract Company, and on August 31, 1905, the defendant, as attorney, acknowledged and delivered to the Abstract Company, as trustee, a deed for the property involved in this suit. It appears from the testimony that a note, together with a mortgage on the property, were executed by the Abstract Company. Neither the note nor the mortgage was introduced in evidence, and the record is silent as to the actual date of their execution and delivery.

On or about October 2, 1905, the Abstract Company issued a certificate to each of the purchasers, including the defendant, evidencing their respective interests in the land held in trust by it for them. Various assignments of the interests held by the respective parties were subsequently made, whereby Sengstacken, Smith, and one Z. T. Siglin acquired all of the interests of the other purchasers. The parties last named then caused to be organized and incorporated, under the laws of the state of Oregon, the Eastside Land Company. On July 22, 1911, the Title Guarantee & Abstract Company conveyed all of its right, title, and interest in and to the property, as trustee, to the Eastside Land Company, and the latter company is now the owner and holder of the property, with the exception of certain lots and blocks which have been conveyed to the various parties named as defendants in this suit.

Robert J. Upton and St. Rayner & St. Rayner, both of Portland, Or., for appellant.

C. R. Peck and C. A. Sehlbrede, both of Marshfield, Or., for appellees.

Before GILBERT, ROSS, and MORROW, Circuit Judges.

MORROW, Circuit Judge (after stating the facts as above). The plaintiff bases his right to the relief prayed for in his complaint upon the rule, laid down by the text-writers and adhered to in many authoritative decisions, that if an agent in the sale of property of his principal purchases it himself, or any interest therein, either directly or through the instrumentality of a third person, without the knowledge or consent of the principal, the sale is voidable, and may be set aside at the option of the principal; that in a transaction of that nature the amount of the consideration, the absence of undue advantage, and similar considerations, are wholly immaterial; and that nothing will defeat the principal's right to avoid the transaction, save and except his own confirmation after full knowledge of all the facts. Mechem on Agency, §§ 455, 461; Michoud v. Girod, 4 How. 503, 11 L. Ed. 1076; Gardner v. Ogden, 22 N. Y. 327, 78 Am. Dec. 192; Grumley v. Webb, 44 Mo. 444, 100 Am. Dec. 304; Mills v. Goodsell, 5 Conn. 475, 13 Am. Dec. 90; Bain v. Brown, 56 N. Y. 288.

But that rule has no application to the facts of this case. The uncontradicted testimony showed that Dora Hermann authorized the defendant to sell the property for $4,000, and that the defendant entered into negotiations with Sengstacken and Smith for the sale of the property in controversy some time in the early part of the month of May, 1905, and on the 17th of that month the sale was consummated and the transaction closed; the defendant, as attorney for the plaintiff and his wife, agreeing to sell the property to Sengstacken and Smith, and the latter agreeing to buy the same, at the price of $4,400, or $400 in excess of the amount Dora Hermann was willing to take for the property. On that date the purchasers gave to the defendant a promissory note, signed by both of them, for the sum of $100, payable in 10 days after date, to be applied on the purchase price of the property. The testimony also showed that, upon delivery of the promissory note, a receipt therefor was given to the purchasers by the defendant, wherein were set forth a description of the land and the terms of the sale. The receipt was not introduced in evidence, for the reason that it had been lost or misplaced, and could not be found. Testimony as to the contents of the receipt was then properly admissible, and this testimony showed that the terms of the sale were that one-half of the purchase price should be paid in cash; the remaining half to be paid in one year, to bear interest at the rate of 6 per cent. per annum, and to be evidenced by a note secured by a mortgage on the property.

The delivery by the purchasers to the defendant of the promissory note as part payment on the purchase price of the property, and the delivery by the latter to the purchasers of the receipt stating the terms of the sale and containing a description of the property, constituted an actual bona fide sale of the property by the defendant, as attorney, to Sengstacken and Smith—a sale so far completed that it could have been enforced by either the vendor or the vendees. The agency of the defendant thereupon, in all material respects, terminated. No intimation of any nature was made at that time, nor had any been made at any time prior thereto, that the defendant should become the pur-

chaser of an interest in the property. The property was sold outright to Sengstacken and Smith, without any restrictions or conditions.

The court below held that the charge of fraud in the transaction was not sustained, and in this finding we concur. Counsel for the plaintiff seek to draw the inference that there was collusion between the defendant and the purchasers, at the time the latter agreed to purchase the property on May 17, 1905, from the fact that the defendant did not inform Dora Hermann, at the time of the delivery of the deed of August 31, 1905, or thereafter, that he had purchased an interest in the property. But we do not think that the failure of the defendant to so inform his principal furnishes any support for the inference that the defendant was acting in bad faith. The seller was in no degree prejudiced by being kept in ignorance as to who the real purchasers of the land were. She received, not only the price which she herself had put upon the land, but $400 in excess thereof; and the testimony shows beyond all doubt that the sum thus received was at that time the fair value of the land. Who the purchasers were was a matter of indifference to her, so long as the price which she asked was paid in full. Glover v. Layton, 145 Ill. 92, 34 N. E. 53, 55.

After Sengstacken and Smith had themselves agreed to purchase the property, they proceeded to interest others in the transaction with a view of forming a syndicate; but that arrangement was one in which the purchasers only were interested. It was in no respect binding upon the defendant or his principal. The first suggestion that the defendant should purchase an interest in the property was made on the 30th day of August, 1905, more than three months after the sale of the property had been made to Sengstacken and Smith. The purchase by the defendant on that date of a one-twelfth interest in the property was, under such circumstances, in no sense a purchase from his principal. It was a purchase from Sengstacken and Smith, who were obligated as purchasers to pay the purchase price in the event it should be found upon examination of the abstract of title that the title to the land was in Dora Hermann.

The true rule applicable to the facts of this case is laid down by the Supreme Court of the United States in the case of Robertson v. Chapman, 152 U. S. 673, 14 Sup. Ct. 741, 38 L. Ed. 592. In that case one Polk had been appointed as agent of the plaintiff, Robertson, for the purpose of selling certain real property to M. O'Donohoe. O'Donohoe was unable to complete the payments under his contract of purchase, and before the deed was delivered to O'Donohoe, and while the same was in the hands of Polk and his partner, Chapman, as agents, to be delivered upon payment of the balance of the purchase price of the land, Polk took over O'Donohoe's contract and completed title in himself. Robertson subsequently brought suit against the agents to set aside the transaction, on the theory that Polk could not properly have taken title to the property. Mr. Justice Harlan, delivering the opinion of the Supreme Court, said:

"If an agent to sell effects a sale to himself, under the cover of the name of another person, he becomes, in respect to the property, a trustee for the principal, and at the election of the latter, seasonably made, will be compelled to surrender it, or, if he has disposed of it to a bona fide purchaser, to ac-

count, not only for its real value, but for any profit realized by him on such resale. And this will be done upon the demand of the principal, although it may not appear that the property, at the time the agent fraudulently acquired it, was worth more than he paid for it. The law will not, in such case, impose upon the principal the burden of proving that he was in fact injured, and will only inquire whether the agent has been unfaithful in the discharge of his duty. While his agency continues he must act, in the matter of such agency, solely with reference to the interests of his principal. The law will not permit him, without the knowledge or assent of his principal, to occupy a position in which he will be tempted not to do the best he may for the principal. It is earnestly contended that the evidence brings the present case within the operation of these principles. In this view of the facts we do not concur. The charge against Polk of dereliction of duty is not sustained. While there is some evidence tending to show that he desired, from the outset, to acquire an interest in this property, it does not appear that he intended to practice any deception upon the plaintiff. At any rate, he was not in fact interested in the offer made by O'Donohoe. The latter purchased on his own account, exclusively, and without any understanding that Polk was to become interested with him, or should take his place in the purchase. Polk had no expectation, when O'Donohoe's offer was accepted, of becoming the owner of the property.

"The only circumstance in the case indicating a want of frankness, on the part of Polk, in his letters to the plaintiff, was a statement in the letter of January 22, 1886, implying that he had actually collected the cash payment of $1,000. His explanation of this statement is that he had not been as diligent as he should have been in concluding the business, and he did not suppose it was of any consequence to the plaintiff whether the $1,000 came from him or from O'Donohoe. It would have been more consistent with the truth if he had then stated that he had agreed, or would agree, with O'Donohoe, to take the property, and therefore, as between himself and O'Donohoe, he was bound to make good the latter's obligations to the plaintiff. But the failure of Polk to notify the plaintiff of his agreement with O'Donohoe, immediately upon its being made, cannot affect any right acquired by him under that agreement. The sale to O'Donohoe was so far consummated that neither party was at liberty to undo what had been done. O'Donohoe executed his notes for the deferred payments, and, his wife uniting with him, gave a mortgage to secure them. The notes and mortgage were delivered to, and accepted by, the plaintiff, who executed a deed to O'Donohoe, and placed it in the hands of Polk, to be delivered to O'Donohoe whenever a decree for the sale of the property was obtained, and upon the payment of the $1,000 stipulated to be paid in cash; so that, at the time Polk took the property from O'Donohoe, it was not in the power either of the plaintiff or of O'Donohoe to rescind the contract between themselves, and Polk's agency for the sale of the property had, in every material sense, terminated. Nothing then stood in the way either of O'Donohoe agreeing that Polk should take the property, or of Polk becoming a purchaser from him. If the sale to O'Donohoe was an actual sale, in good faith, so far as Polk had any agency in effecting it—if the contract between the plaintiff and O'Donohoe had been so far executed, at the time Polk took O'Donohoe's place in the purchase, that it could not be rescinded by either party to it—then Polk's agency in selling the property did not prevent him from purchasing from O'Donohoe; and his failure to give notice of his purchase, immediately upon its being made, cannot be regarded as a fraud upon the rights of the plaintiff. A real bona fide sale of the property, through the agency of Polk, and upon the terms prescribed by the plaintiff, and which sale was substantially completed between vendor and vendee, intervened between Polk's acceptance of the position of agent and his purchase of the property from the plaintiff's vendee. Upon this ground, the decree below can be sustained without impairing in any degree the rule that an agent will not be permitted to become the purchaser, without the knowledge or consent of his principal, of property committed to him for sale."

It may also be stated, as a general rule, that in all cases of the nature of the one now under consideration the decision depends upon

the application to the particular facts of the rule of disqualification. In those cases where a conflict between duty and self-interest has been shown, the purchase has been held voidable, regardless of the manner in which or by whom the sale was made. Marquam v. Ross, 47 Or. 374, 405, 78 Pac. 698, 83 Pac. 852, 86 Pac. 1. In the present case no such conflict is made to appear. The defendant secured purchasers for the property, not, indeed, at the price at which he had been authorized to sell, but at a price in excess thereof. Upon the consummation of the sale his duty to his principals ceased. The sale was consummated, as we have shown, on the 17th of May, 1905, and nothing then stood in the way of his agreeing three months thereafter to purchase an interest in the property.

The judgment of the court below is affirmed.

(217 Fed. 953)

CHICAGO, ST. P., M. & O. RY. CO. v. RORVIG.

(Circuit Court of Appeals, Eighth Circuit. October 26, 1914.)

No. 4116.

1. CARRIERS (§ 320*)—INJURIES TO PASSENGERS—DEPOT PLATFORM—OBSTRUCTIONS—ICE—NEGLIGENCE—QUESTION FOR JURY.

In an action for injuries to a passenger by falling on a ridge of ice on defendant's depot platform as the passenger was passing to his train, whether the ice formed on the platform on the day of the accident, or had negligently been permitted to remain for one or more days prior to the accident, *held* for the jury.

[Ed. Note.—For other cases, see Carriers, Cent. Dig. §§ 1118, 1126, 1149, 1153, 1160, 1167, 1179, 1190, 1217, 1233, 1244, 1248, 1315–1325; Dec. Dig. § 320.*]

2. EVIDENCE (§ 359*)—PHOTOGRAPHS—CHANGED SITUATION.

Where, immediately after plaintiff had fallen on a ridge of ice on defendant's depot platform, the ice was covered with salt, which removed it, and there was no controversy as to the other relative locations as disclosed by the evidence, photographs of the platform, etc., taken two or three days after the accident, were properly excluded.

[Ed. Note.—For other cases, see Evidence, Cent. Dig. §§ 1509–1512; Dec. Dig. § 359.*]

In Error to the District Court of the United States for the District of Minnesota; Charles A. Willard, Judge.

Action by Bjorn Rorvig against the Chicago, St. Paul, Minneapolis & Omaha Railway Company. Judgment for plaintiff, and defendant brings error. Affirmed.

George W. Peterson, of St. Paul, Minn., for plaintiff in error.

Hammond & Farmer, of St. James, Minn., and S. B. Wilson, of Mankato, Minn., for defendant in error.

Before SANBORN, Circuit Judge, and TRIEBER and REED, District Judges.

SANBORN, Circuit Judge. The railway company, the defendant below, complains of a judgment against it for alleged negligence in

*For other cases see same topic & § NUMBER in Dec. & Am. Digs. 1907 to date, & Rep'r Indexes

its failure to remove an accumulation of ice from its platform at Madelia, Minn., which the plaintiff alleged caused him to fall and to break his hip as he was walking across the platform of the station to enter one of defendant's trains at about noon on January 16, 1912. The refusal of the court below to instruct the jury to return a verdict for the defendant at the close of the evidence, and its refusal to receive in evidence two photographs of the place of the accident taken two days thereafter, are specified as errors.

These facts were admitted or proved beyond dispute when the evidence was closed: The railroad of the defendant extended east and west past the station at Madelia, which was on the north side of the railroad. On the south side of the station building was a bay window, and a platform between the station building and the track. Under the eaves of the sloped roof over this bay window there was, at the time of the accident, an accumulation of ice, upon which there was a light covering of snow. Plaintiff's witnesses testified that this accumulation was a rough ridge sloping north and south from 1½ inches to 3 inches thick, about 4 feet wide and 8 feet long. Defendant's witnesses testified that it was from one-half inch to an inch thick, 6 inches wide, and 6 feet long. The weather was cold on the day of the accident, and for 10 days before. The maximum temperature on that day was 15 degrees above zero, and the minimum temperature 24 degrees below zero. The mean maximum temperature for the first 16 days of January at New Ulm, 15 miles north Madelia, was 7.75 degrees below zero, and the mean minimum temperature was 21.6 degrees below zero. The plaintiff purchased a ticket from Madelia to St. James from the defendant and started to enter his train, which had arrived, when, as he was walking towards it, he stepped on the ice, fell, and was injured. After the accident one of the employés of the defendant put salt on the ice, and it was gone before the night of January 16, 1912.

The court charged the jury that, if the ice accumulated on the day of the accident, they must return a verdict for the defendant, but that, if it had been on the platform so long prior to that day that the defendant knew, or ought to have known, of its presence, and if it was so rough and dangerous to passengers that persons of ordinary prudence in its situation would have removed it, and the defendant either knew, or ought to have known, its character and location before the day of the accident, they might return a verdict for the plaintiff, if they were of the opinion that the defendant failed to exercise ordinary care to prevent injury to its passengers by the accumulation of the ice. This charge of the court is not challenged.

[1] "The position of the defendant," writes counsel for the railway company in his brief, "is that plaintiff slipped on newly made ice, which had formed on the day of the accident by drippings from the eaves of the station building, which froze on striking the brick platform, forming a slight ridge of slippery ice." But the question whether the ice was newly made on that day, or had been on the platform for many days, was the clear issue during the trial, which the jury decided against the company. Unless, at the close of the trial, the evi-

dence in support of that conclusion was so insubstantial that it was the duty of the court, after the verdict, to set aside the conclusion for want of substantial evidence to sustain it, there was no error in its refusal to direct a verdict for the defendant. To avoid a useless discussion in detail of the evidence for the plaintiff, it is conceded in the discussion of this case that the weight of the evidence was that the platform was cleared by the defendant's employés on the morning of January 16, 1912, before the accident, and on the evening of January 17, 1912; that there was no ice on the platform at either of these times, or for days before; and that the ice on which the plaintiff fell was formed by drippings from the eaves on the morning of January 16, 1912.

Notwithstanding this concession, the record discloses the fact that Mr. Beaman testified that he was the clerk of the hotel at Madelia at the time of the accident, that he took the mail from the train in the night every night to the hotel on a cart on runners or on a sled, that there was a rough ridge of ice on the platform under the eaves of the station building an inch and a half thick, 3 feet wide, and 12 feet long during at least four nights just preceding the accident, that he knew this because he saw it and drew his sled over it each night, that he took the sled over the ice, because it ran more easily there than over the other parts of the platform that were free from ice, that this ice was in the same condition during the four nights just preceding the accident, and that it was gone after the accident. The record also discloses the fact that Mr. Playfair testified that at the time of the accident he was the village marshal of Madelia, that it was a part of his duty to go to the railroad station every day, and he did so, that he was on duty from 1 o'clock in the afternoon until 3 o'clock in the morning each day, that he was accustomed to help Mr. Beaman, the night clerk at the hotel, to draw his mail across the platform, that they ran the sled or sleigh over the ice because it would run easy there, that at the time of the accident and for a week or ten days before that time there was a rough ridge of ice under the eaves of the roof on the station platform an inch and a half thick and 8 or 10 feet long.

The testimony of these two witnesses was too clear, positive, and circumstantial to be disregarded by the trial court. It presented substantial evidence in support of the finding of the jury, and a conflict of evidence on a material issue of fact, upon which the plaintiff had the legal right to their verdict, and there was no error in the refusal of the court to take the case from the jury.

[2] After the situation of the railroad, the station building, the platform, and other relative locations about which there was no controversy had been disclosed by the evidence, and the undisputed fact that the ice on the platform on the day of the accident had been removed on that day after the accident by the use of salt had been proved, the defendant offered in evidence two photographs of the railroad, platform, and the station building, taken two or three days after the accident, and evidence that the condition of the platform was the same at the time the photographs were taken that it was at the time of the accident, except that the salt had caused the ice to disappear, and the court rejected this evidence. There was certainly no error in this

ruling, because when this offer was made the only material issues in the case were the amount and condition of the ice on which the plaintiff fell and the length of time it remained on the platform, and the offered evidence was neither relevant nor material to any of these issues.

There was no error in the trial of this case, and the judgment below is affirmed.

(217 Fed. 956)

MIDLAND VALLEY R. CO. v. CONNER.

(Circuit Court of Appeals, Eighth Circuit. October 26, 1914.)

No. 4063.

1. CARRIERS (§ 316*)—INJURIES TO PASSENGERS—NEGLIGENCE—RES IPSA LOQUITUR.

The happening of an accident to a passenger is prima facie evidence of negligence on the part of the carrier, and, the passenger being in the exercise of due care, the burden rests on the carrier to show that its whole duty was performed, and that the injury was unavoidable by human foresight.

[Ed. Note.—For other cases, see Carriers, Cent. Dig. §§ 1261, 1262, 1283, 1285–1294; Dec. Dig. § 316.*]

2. CARRIERS (§ 321*)—INJURIES TO PASSENGERS—PLEADING AND PROOF—RES IPSA LOQUITUR—BURDEN OF PROOF.

Where, in an action for death of a passenger, plaintiff pleaded specific acts of negligence on the part of the carrier, but no allegation of general negligence, an instruction submitting the doctrine of res ipsa loquitur, and charging that such doctrine raised a presumption of negligence on the part of the carrier, and also shifted the burden of proof to the carrier to show that its whole duty was performed, etc., was error.

[Ed. Note.—For other cases, see Carriers, Cent. Dig. §§ 1247, 1326–1336, 1343; Dec. Dig. § 321.*

Burden of proof of negligence where passengers have been injured, see note to Southern Ry. Co. v. Myers, 32 C. C. A. 23.]

In Error to the District Court of the United States for the Western District of Oklahoma; John H. Cotteral, Judge.

Action by Jennie C. Conner against the Midland Valley Railroad Company. Judgment for plaintiff, and defendant brings error. Reversed and remanded, with directions.

Edgar A. de Meules, of Muskogee, Okl. (Sol. H. Kauffman, of Muskogee, Okl., on the brief), for plaintiff in error.

Horace Speed, of Tulsa, Okl., and W. G. Robertson, of Muskogee, Okl. (Lewis A. Kean, of Muskogee, Okl., on the brief), for defendant in error.

Before SANBORN and SMITH, Circuit Judges, and TRIEBER, District Judge.

SMITH, Circuit Judge. The Midland Valley Railroad Company, hereafter called the defendant, operates a railroad from Tulsa, Okl., northwest through Osage county, in that state, to Silverdale, in Kansas. At Nelagoney this road crosses a line of the Missouri, Kansas

*For other cases see same topic & § NUMBER in Dec. & Am. Digs. 1907 to date, & Rep'r Indexes

& Texas, which extends through the county from northeast to southwest. At Nelagoney the defendant's railroad extends approximately east and west across the Missouri, Kansas & Texas. Immediately southeast of the crossing is a joint depot of the two companies. Jennie C. Conner, hereafter called the plaintiff, is the widow of Joseph F. Conner. On June 19, 1911, Joseph F. Conner came southwest on the Missouri, Kansas & Texas to Nelagoney. After staying there to a noon meal, he bought a ticket on the defendant's railroad to Pawhuska, the first station to the northwest. The freight train on which he expected to go was then in the yard. The ticket agent of whom he bought his ticket told him that he would have to go down in the yard and get on the train; "it wouldn't stop here," meaning at the depot. He went down in the yard, and attempted to get on the caboose, and in doing so was killed. There is a serious conflict in the evidence as to whether the train was standing still when Mr. Conner attempted to enter it or was in slow motion. There was a verdict for the plaintiff, and the defendant sued out this writ of error.

[1] The petition contains five specific allegations of negligence, but no allegations of general negligence. The court instructed the jury as follows:

"The plaintiff complains that the death of her husband was due to defendant's negligence in several particulars, but the only ground which you will consider is in substance that while the deceased was a passenger of the railroad company, and attempting at its invitation to board the caboose of this freight train, the defendant, through its agents and employés in charge of the train, negligently and without notice to him moved the train suddenly and quickly, whereby he was thrown down and dragged under it and came to his death.

* * * * * * * * * *

"In this case, it is incumbent on the plaintiff to show by a fair preponderance of the credible evidence that the railroad company was negligent toward the deceased while in the exercise of his right as a passenger in starting and moving the train. Under the law, however, when it is shown by the evidence that a passenger is injured while the duty for taking care for his safety rests upon a railroad company and he is injured by the operation of its train, then the presumption is that the injury was due to its negligence, and this shifts the burden of proof upon the company to show that the injury was not due to its negligence.

* * * * * * * * * *

"The burden of proof rests upon the plaintiff to show that the accident was due to the alleged train operation by the defendant; but, if this is shown, then the law presumes the accident was due to the negligence of the railroad company; that is, a prima facie case of negligence is made out against the company, devolving upon it the burden of showing that the accident was not due to its negligence."

The defendant having objected to the last paragraph, the court said:

"In view of the exception, the court will restate the burden here, so that it will be clearly understood. The burden of proof is on the plaintiff to show by a preponderance of the evidence that Mr. Conner had this invitation to go upon the caboose at the time and place in question, and that he was injured at the time, and that he came to his death at the time, while he was accepting the invitation to go on board of the train, and that his death was due to the operation of the train, as alleged in the petition. The law holds that where, under such circumstances, a passenger is injured by the instrumentality of the railroad company, and that in this case would be the train operation, then the presumption arises that the injury or fatality was due to the negligence

of the company in its train operation, so that the burden then shifts over to the defendant company to show by a preponderance of the evidence that the train operation was not negligent."

It has been laid down by the Supreme Court in Gleeson v. Virginia Midland Railroad Co., 140 U. S. 435, 11 Sup. Ct. 859, 35 L. Ed. 458, that:

"Since the decisions in Stokes v. Saltonstall, 13 Pet. 181 [10 L. Ed. 115], and Railroad Co. v. Pollard, 22 Wall. 341 [22 L. Ed. 877], it has been settled law in this court that the happening of an injurious accident is in passenger cases prima facie evidence of negligence on the part of the carrier, and that (the passenger being himself in the exercise of due care) the burden then rests upon the carrier to show, that its whole duty was performed and that the injury was unavoidable by human foresight. The rule announced in those cases has received general acceptance, and was followed at the present term in Inland & Seaboard Coasting Co. v. Tolson, 139 U. S. 551 [11 Sup. Ct. 653, 35 L. Ed. 270]."

The court was doubtless attempting to embody the maxim, "Res ipsa loquitur." It is a matter of grave doubt as to whether this rule has any application to this case. It has been many times held that where the plaintiff alleges specific acts of negligence, instead of general negligence, it has no application whatever. McGrath v. St. Louis Transit Co., 197 Mo. 97, 94 S. W. 872; Roscoe v. Metropolitan St. Ry. Co., 202 Mo. 576, 101 S. W. 32; Beave v. St. Louis Transit Co., 212 Mo. 331, 111 S. W. 52; Evans v. Wabash R. Co., 222 Mo. 435, 121 S. W. 36, and numerous other cases in the Supreme Court and Court of Appeals of Missouri; West Chicago St. Ry. Co. v. Martin, 154 Ill. 523, 39 N. E. 140; Chicago Union Traction Co. v. Leonard, 126 Ill. App. 189; Lone Star Brewing Co. v. Willie, 52 Tex. Civ. App. 550, 114 S. W. 186; Roberts v. Sierra Railway Co., 14 Cal. App. 180, 111 Pac. 519; Moore on Carriers (2d Ed.) 1482, 1485. But this is not the universally accepted rule. Walters v. Seattle R. & S. R. Co., 48 Wash. 233, 93 Pac. 419, and the extensive note thereto in 24 L. R. A. (N. S.) 788.

"Res ipsa loquitur" means "the thing speaks for itself." The question is, What does it say? Does it say that from the accident it is presumed that the company has been negligent in every possible way, or does it say that the presumption is that in some way the company has been negligent? Of course, if the first is what it says, that is, the company has been negligent in every conceivable way, then the presumption is that it was negligent in the very way specifically alleged; but if the second is true, if the presumption is that in some way the company has been negligent, then there is no presumption of negligence in any particular way specified, and this is true although, where the presumption exists, the company must show that it was not negligent in any way. The rule that the evidence must correspond with the allegations is as old as the common law, and if the presumption is simply of some negligence that caused the injury, and not a negligence in all things, one who specifies the negligence can find nothing in the presumption to sustain the allegation.

[2] But the court not only instructed the jury that this presumption existed, but that it shifted the burden of proof. This was in direct

conflict with the opinion of the Supreme Court of the United States in Sweeney v. Erving, 228 U. S. 233, 33 Sup. Ct. 416, 57 L. Ed. 815, which was not published officially at the time of the trial of this case in the District Court.

It follows that this case must be reversed, and other points argued will not be considered, as the question presented may not arise upon another trial.

It is ordered that the case be reversed and remanded, with directions to set aside the verdict and grant a new trial.

(217 Fed. 959)

GREAT NORTHERN RY. CO. v. HARMAN.

(Circuit Court of Appeals, Ninth Circuit. November 16, 1914.)

No. 2372.

1. RAILROADS (§ 376*)—INJURIES TO TRESPASSERS—LAST CLEAR CHANCE.

Where plaintiff, a trespasser on defendant's railroad track, was injured while endeavoring to remove a push car from the track in front of an approaching train, the fact that he was unlawfully on the track did not place him beyond the pale of the law, nor relieve defendant from liability for injuring him, in case the injury could have been prevented by the exercise of due care on the part of the approaching engineer after plaintiff's position of danger was actually seen and appreciated.

[Ed. Note.—For other cases, see Railroads, Cent. Dig. §§ 1275–1279; Dec. Dig. § 376.*]

2. RAILROADS (§ 381*)—PERSONS ON TRACK—TRESPASSERS—CONTRIBUTORY NEGLIGENCE.

Where plaintiff, a trespasser on defendant's railroad track, on seeing an approaching train, attempted to remove a push car from the track, but was unable to do so in time to prevent a collision, his attempt to remove the car, instead of exercising all his efforts to avoid personal injury, leaving the push car on the track, was not such contributory negligence, continuing up to the time of the accident, as would preclude a recovery under the last clear chance doctrine.

[Ed. Note.—For other cases, see Railroads, Cent. Dig. §§ 1285–1293; Dec. Dig. § 381.*

Care required of railroads as to trespassers on or near tracks, see note to Louisville & N. R. Co. v. Womack, 97 C. C. A. 566.]

In Error to the District Court of the United States for the District of Montana; Geo. M. Bourquin, Judge.

Action by Charles Harman against the Great Northern Railway Company. Judgment for plaintiff, and defendant brings error. Affirmed.

Veazey & Veazey, of Great Falls, Mont., for plaintiff in error.

Maury, Templeman & Davies, of Butte, Mont., for defendant in error.

Before GILBERT, ROSS, and MORROW, Circuit Judges.

GILBERT, Circuit Judge. The plaintiff had been working as a carpenter in the employment of certain railroad contractors, who were

*For other cases see same topic & § NUMBER in Dec. & Am. Digs. 1907 to date, & Rep'r Indexes

engaged in relining a tunnel on the defendant's road. On being discharged from his work, the plaintiff took a push car belonging to the defendant, placed thereon his tool chest, blankets, and personal baggage, and, accompanied by another man, proceeded to push the car along the track of the defendant from the tunnel to Basin, a station where he expected to take a train in the direction of Butte. He claimed the right so to use the push car on the ground that the railroad track was the only available way to Basin, that if he took the county road he would have to wade a creek, he having no money with which to pay for a livery team, that the track from the tunnel to Basin was a general thoroughfare for employés on the tunnel work, and that the push car had regularly been used by them in carrying emergency supplies from Basin to the tunnel. While on his way, and while he and his companion were pushing the car around a curve, the plaintiff saw a train 400 or 500 feet ahead, approaching at a speed variously estimated by the witnesses at from 20 to 45 miles an hour. While he was diligently endeavoring to remove the push car and its load from the track, and when he had almost succeeded in doing so, the train struck the push car, driving it against the plaintiff, and seriously injuring him.

The court below ruled that the plaintiff was at the time of the accident a trespasser upon the defendant's tracks, and that in using the push car as he did he was guilty of contributory negligence. The plaintiff's action for damages, however, was tried upon the theory that the defendant had "the last clear chance" to avoid injuring the plaintiff, and that it negligently failed in its duty so to do.

[1] It is assigned as error that the court denied the defendant's request for a peremptory instruction to the jury to return a verdict in its favor. On a careful consideration of the evidence we are not convinced that it was error to deny the request. There was evidence tending to show that, after the engineer of the train discovered the plaintiff's danger, he had ample time in which to bring the train to a stop before reaching the place where the plaintiff was. In view of such evidence, the question whether or not the defendant was guilty of negligence in the matter charged was properly submitted to the jury.

The defendant contends that the wrongful and unlawful conduct of the plaintiff, involving moral turpitude, placed him beyond the law of care, and that the defendant owed him no duty to avoid injuring him, even after his perilous position was seen. No authority is cited which sustains so harsh a doctrine. In Missouri & Pac. Ry. Co. v. Weisen, 65 Tex. 447, the court said:

> "A man does not forfeit his life, or his right to remain whole, by going where he has no right to go, or being where he has no business."

Cases are cited in support of the proposition that one who is engaged in violation of law cannot recover if his own illegal act was an essential element of his case. In the case at bar the plaintiff was engaged in no violation of a statute. It is true that he was a trespasser, but notwithstanding that fact the defendant's employés in charge of the operation of the train owed him the duty of ordinary

care as soon as his position of danger was actually seen and appreciated. A cause of action arose in his favor, if the defendant actually knew of his peril and thereafter failed to exercise ordinary care to avoid injuring him; and the plaintiff's contributory negligence cannot defeat the action, if it can be shown that the defendant might by the exercise of reasonable care and prudence have avoided the consequences of that negligence. Grand Trunk Ry. Co. v. Ives, 144 U. S. 408, 12 Sup. Ct. 679, 36 L. Ed. 485; Chunn v. City & Suburban Ry. Co., 207 U. S. 302, 28 Sup. Ct. 63, 52 L. Ed. 219; Turnbull v. N. O. & C. R. Co., 120 Fed. 783, 57 C. C. A. 151; Herr v. St. Louis & S. F. R. Co., 174 Fed. 943, 98 C. C. A. 550; The Plymouth, 186 Fed. 108, 108 C. C. A. 217; St. Louis & S. F. R. Co. v. Summers, 173 Fed. 358, 97 C. C. A. 328; Atchison, T. & S. F. Ry. Co. v. Taylor, 196 Fed. 878, 116 C. C. A. 440.

[2] But it is urged that the court erred in refusing to instruct the jury that if, after seeing the approaching train, the plaintiff remained on the track in an endeavor to remove the push car, his carelessness in so doing continued as a cause of his injury, and that, therefore, he cannot recover, notwithstanding that the defendant in the exercise of reasonable care might have stopped the train in time to avoid striking him. The cases which are cited to sustain this proposition do not involve the doctrine of the last clear chance. We do not find that what the plaintiff did under the circumstances shows such obvious disregard of duty and safety as amounts to misconduct which the courts should declare to be negligence as a matter of law. The question was clearly one for the jury. Linnehan v. Sampson, 126 Mass. 506, 30 Am. Rep. 692; Mobile & O. R. Co. v. Ridley, 114 Tenn. 727, 86 S. W. 606, 4 Ann. Cas. 925; Corbin v. City of Philadelphia, 195 Pa. 461, 45 Atl. 1070, 49 L. R. A. 715, 78 Am. St. Rep. 825; Maryland Steel Co. v. Marnev, 88 Md. 482, 42 Atl. 60, 42 L. R. A. 842, 71 Am. St. Rep. 441; Saylor v. Parsons, 122 Iowa, 679, 98 N. W. 500, 64 L. R. A. 542, 101 Am. St. Rep. 283; Becker v. Louisville & N. R. Co., 110 Ky. 474, 61 S. W. 997, 53 L. R. A. 267, 96 Am. St. Rep. 459; Pennsylvania Co. v. Langendorf, 48 Ohio St. 316, 28 N. E. 172, 13 L. R. A. 190, 29 Am. St. Rep. 553.

The defendant, in view of the obstruction on the track and the plaintiff's peril, was in duty bound to stop the train if possible. The situation was not like that in which an engineer of a train sees a man walking on the track several hundred feet ahead of him, and has the right to assume that the man will get out of the way. It was a situation in which the engineer discovered men on the track with a push car, which if it were not removed, and the train were not stopped, might occasion a disastrous collision. He saw that the two men were in the act of removing the push car, yet, according to the plaintiff's testimony, the speed of the train had not been perceptibly diminished when the collision occurred. The plaintiff had knowledge and experience in the handling of trains, as was shown by the evidence, and on seeing the approaching train may well have assumed that it would be brought to a stop before reaching the place where he was. He was acting in an emergency, with but a moment for deliberation, and what

he did was presumably for the purpose of avoiding injury to the passengers on the train. His conduct in so doing should not be held to absolve the defendant from the duty of reasonable care under the last clear chance doctrine, and it should not be held as matter of law that it was the duty of the plaintiff, on seeing the approaching train, to betake himself to a place of safety and abandon the car on the track, with all the possible resulting consequences. In 29 Cyc. 523, it is said:

"The law has so high a regard for human life that it will not impute negligence to an effort to preserve it, and one who attempts to rescue another from imminent danger is not guilty of contributory negligence, although he thereby imperils his own life, whether he is aware of the danger or not, where such attempt is made in good faith, in the belief that he could save the life of the person in danger and avoid injury himself, unless the attempt be made under circumstances amounting to rashness or recklessness in the judgment of a man of ordinary prudence. Error in judgment at such time will not defeat recovery."

The judgment is affirmed.

(217 Fed. 962)

W. H. McELWAIN CO. v. BULLOCK.

(Circuit Court of Appeals, First Circuit. November 11, 1914.)

No. 1083.

1. MASTER AND SERVANT (§ 219*)—MASTER'S LIABILITY FOR INJURY TO SERVANT—ASSUMPTION OF RISK.

Plaintiff for four years had operated a sewing machine in defendant's shoe factory, above which was an electric light. She arrived one morning five minutes before time to commence work, when it was quite dark, and was unable to turn on her light, because the current had not been switched on from below, which was done, however, in two or three minutes. In the meantime she undertook to hang up her coat in the place provided, which required her to step upon a chair and from there on a bench, and in doing so she placed the chair on some shoe uppers which had been left on the floor by a fellow servant, and, the chair tilting, she fell and was injured. *Held* that, in so far as there may have been negligence in so placing the coat hangers as to make it necessary to climb upon the bench, the risk was an obvious one, which she knew and assumed; that she also assumed the risk involved in moving around and placing the chair in the dark, which were not required by her employment or properly incident thereto.

[Ed. Note.—For other cases, see Master and Servant, Cent. Dig. §§ 610–624; Dec. Dig. § 219.*

Assumption of risk incident to employment, see note to Chesapeake & O. R. Co. v. Hennessey, 38 C. C. A. 314.]

2. WORDS AND PHRASES—"WIRE OF SHOES."

A "wire of shoes" is a four-pronged structure of wire, on which are strung the tops or uppers of shoes.

In Error to the District Court of the United States for the District of New Hampshire; E. Aldrich, Judge.

Action at law by Elizabeth M. Bullock against the W. H. McElwain Company. Judgment for plaintiff, and defendant brings error. Reversed.

---

*For other cases see same topic & § NUMBER in Dec. & Am. Digs. 1907 to date, & Rep'r Indexes

Edward C. Stone, of Boston, Mass. (Sawyer, Hardy & Stone, of Boston, Mass., on the brief), for plaintiff in error.

Edward K. Woodworth, of Concord, N. H. (David W. Perkins, of Manchester, N. H., and Streeter, Demond, Woodworth & Sulloway, of Concord, N. H., on the brief), for defendant in error.

Before PUTNAM and BINGHAM, Circuit Judges, and BROWN, District Judge.

BROWN, District Judge. This is a writ of error for review of the rulings of the District Court in an action of tort, wherein the plaintiff, Elizabeth M. Bullock, here defendant in error, had a verdict.

Upon the trial before a jury the defendant, W. H. McElwain Company, at the conclusion of all the testimony, both on behalf of plaintiff and of defendant, moved for the direction of a verdict in its behalf, on the ground that the evidence was insufficient in law to support a verdict for the plaintiff.

While there are 18 assignments of error, we think it sufficient to consider whether there was error in the refusal of defendant's request for the direction of a verdict in its favor.

The plaintiff, Elizabeth M. Bullock, was employed as a vamper in the shoe factory of W. H. McElwain Company, at Manchester, N. H., and operated a sewing machine at a bench whereon were a number of machines, over each of which was suspended an ordinary electric light. The plaintiff was required to be at work at quarter before 7 o'clock a. m., and arrived at the workroom at 20 minutes before seven, on January 4, 1910, when it was still quite dark.

The entrance to the factory and the stairways were artificially lighted, but there was no artificial light in the workroom. The only means of artificially lighting the interior of the room was by electric lights suspended over each machine.

The plaintiff testified that when she entered the room it was light enough so that she could see and get around, and could easily go to her machine. When she arrived at her machine she reached up to turn on the light, but was unable to do so because the current had not been switched on from the main switch controlling all the individual lights in this room, which was situated in a box beside the door on the lower floor. The key to this box was in the possession of a foreman, whose duty it was to turn on the switch when he came in the morning. Plaintiff testified that it was so dark she could not see the floor as she stood there.

[2] The plaintiff then took off her coat, and, for the purpose of hanging it up on hooks, which had been provided for this purpose by the company, on a post back of her machine, placed a chair against a bench back of her, stepped on the chair with her coat upon her arm, and was stepping from the chair to the bench, when the chair tipped and threw her to the floor, inflicting injuries to her knee. She testifies that the light was thrown on two or three minutes after she fell, and that she looked around where she had set her chair, and saw what is called a "wire of shoes." A wire of shoes is described as a four-pronged structure of wire, on which were strung the tops or uppers

of shoes. They were strung 12 pairs on a wire by the operatives, and as a wire was finished it was, in ordinary course, thrown by the operative into the aisle behind her, where it was picked up by a boy. Though she did not so state directly, the inference was suggested that her chair had been placed upon this, and for that reason had tipped.

There was evidence that in order to hang up her garments upon the hooks provided for this purpose it was necessary for her to climb a chair and step from that to the bench, and that no other means were provided for that purpose; that she had done this all the time she had worked in this place—about 4 years.

On cross-examination she stated that she put both feet on the chair, and put her right foot on the bench, when the chair tipped over to the left; that her knee hit the chair, and also struck the floor.

[1] The defendant in error argues that the jury would have been warranted in finding that the master, in the exercise of a reasonable degree of care, should have provided a place to hang coats and hats, the use of which did not require a climb upon a bench, or should have provided a method of stepping on to the bench, involving the use of something less insecure than a light kitchen chair. It is argued, also, that the master was at fault in a failure to light the place and to keep the floor free from obstructions.

The jury were instructed in the following language:

"You may think, independent of the question of lighting, or independent of the question of the wire of shoe uppers, that there was fundamental fault, and that the place was unsafe, and in getting up there, either with or without light, or knowing about the string of uppers, or not knowing about them, that if the woman while in the exercise of reasonable care, by reason of the fundamental fault of furnishing an insecure and unsafe place, was injured. If that is your view, you have a right to decide the case upon that ground alone, if that is in accordance with your judgment. Some of you may take that view; some of you may not; possibly none of you will take that view."

As to this branch of the case, it is quite clear that, if risk was involved in stepping from a chair to a bench, it was a risk which was obvious to a woman of 27 years of age, who had done this for 4 years, and that such risk was known and assumed.

It remains to consider how far this risk was affected, if at all, by any other negligence of the master.

There is no contention that the electric lighting system in itself was defective. The negligence attributed to the master is that the light was not turned on, and that the wire of shoes was not removed from the floor.

Assuming that the absence of light may have contributed to the accident by concealing the wire of shoes on the floor, or possibly making uncertain the step from chair to bench, it does not appear that there was any necessity for the plaintiff to attempt to place the chair or to step upon the bench before the light had been turned on. The testimony shows that the electricity was turned on within two or three minutes, and before the time at which she was required to go to work. The clearing of the wires of shoes from the aisles is shown to have been the duty, not of the master, but of a fellow servant. The risk from moving about in the dark, or from insecurely placing a chair in

the dark, was not a risk required by her employment, or properly incident thereto, but an ordinary and obvious risk, which was voluntarily assumed.

We are of the opinion that the defendant's request for the direction of a verdict should have been granted, and that the refusal was error.

The judgment of the District Court is reversed, the verdict is set aside, and the case remanded to that court for proceedings consistent with this opinion; and the plaintiff in error recovers costs in this court.

(217 Fed. 965)

CITY OF LEE'S SUMMIT et al. v. JEWEL TEA CO.

(Circuit Court of Appeals, Eighth Circuit. November 10, 1914.)

No. 3960.

1. COMMERCE (§ 40*)—"INTERSTATE COMMERCE"—MUNICIPAL ORDINANCES—LICENSE TAX.

Complainant, an Illinois merchant, employed an agent, who solicited orders for teas and coffees in defendant city, in Missouri, sending the orders to complainant in Illinois by mail. The merchandise was put up in packages according to the quantities ordered, but without the names of the customers on them, and shipped in one or more cases to the agent, who alone had authority to receive the goods from the carrier, and who then delivered the packages to the customers and collected and remitted the price, receiving a salary sent from complainant. *Held*, that the transaction was "interstate commerce," and was therefore not subject to an ordinance imposing a license tax on vendors of teas, coffees, and other kinds of merchandise not otherwise licensed.

[Ed. Note.—For other cases, see Commerce, Cent. Dig. §§ 29, 30; Dec. Dig. § 40.*

For other definitions, see Words and Phrases, First and Second Series, Interstate Commerce.]

2. INJUNCTION (§ 105*)—CRIMINAL PROSECUTIONS.

Where city authorities had arrested complainant's agent several times, and threatened to continue to arrest him every time he went there and transacted business for complainant, because of his failure to take out a license under a local ordinance, when in fact the business transacted constituted interstate commerce, the court properly granted an injunction restraining further prosecutions; those pending being expressly excepted from the decree.

[Ed. Note.—For other cases, see Injunction, Cent. Dig. §§ 178, 179; Dec. Dig. § 105.*]

Appeal from the District Court of the United States for the Western District of Missouri; Arba S. Van Valkenburgh, Judge.

Suit in equity by the Jewel Tea Company against the City of Lee's Summit and others, to enjoin the enforcement of a municipal ordinance imposing a license on vendors of teas, coffees, etc. From a decree (198 Fed. 532) for complainant, defendants appeal. Affirmed.

E. S. Bennett, of Lee's Summit, Mo., and Pence & Thayer, of Kansas City, Mo., for appellants.

L. E. Durham, of Kansas City, Mo. (Cowherd, Ingraham, Durham & Morse, of Kansas City, Mo., on the brief), for appellee.

---

*For other cases see same topic & § NUMBER in Dec. & Am. Digs. 1907 to date, & Rep'r Indexes

Before HOOK and SMITH, Circuit Judges, and AMIDON, District Judge.

HOOK, Circuit Judge. This is an appeal from a decree on final hearing enjoining the city of Lee's Summit, Mo., and its mayor and city marshal, from enforcing against the Jewel Tea Company a municipal ordinance imposing a license charge of $1 per day upon vendors of teas, coffees, etc., "selling at retail from wagon or other vehicle," and a like sum where the articles are sold "by solicitor taking orders for future delivery." The trial court held that the business of the company was in interstate commerce and therefore not subject to the ordinance. (D. C.) 189 Fed. 280; (D. C.) 198 Fed. 532.

[1] The Jewel Tea Company is an Illinois merchandising corporation, with headquarters at Chicago, in that state. It employed an agent residing in Missouri. The agent canvassed from house to house in Lee's Summit for orders for future delivery of teas and coffees. The orders taken were mostly for half-pound and pound lots. He forwarded the orders to the company at Chicago, giving the quantities only, not the names of the purchasers. At Chicago the company put up the goods in small packages according to the quantities ordered, so as to permit of exact delivery to each purchaser without breaking. On each package was marked its price, but not the name of the purchaser. The packages were then put into a large box or other receptacle and shipped by freight to Lee's Summit; the company being both consignor and consignee. When the shipment arrived at Lee's Summit, the agent received it, opened the box or container, had it hauled around on a dray, delivered the packages unopened to those who had given the orders, and collected payment for them on delivery. At the same time he solicited further orders. He made the rounds about twice each month, and by other canvassing endeavored to increase the trade. The agent remitted the moneys collected to the company at Chicago. He had no financial interest in the business, save his salary, which was paid from that city. Occasionally a purchaser would refuse to accept and pay. In such case the package intended for him was sent to a branch house of the company at Kansas City, Mo., but all the goods delivered in Lee's Summit were shipped directly there from Chicago in the way described.

These facts were undisputed, and they show that the company was engaged in interstate commerce. In a case between the same company and the city of Carthage, Mo., involving substantially the same business method, the Supreme Court of that state very recently so decided. Jewel Tea Co. v. City of Carthage (Mo.) 165 S. W. 743. Answers to the various arguments of appellants to the contrary may also be found in Stewart v. Michigan, 232 U. S. 665, 34 Sup. Ct. 476, 58 L. Ed. 786; Crenshaw v. Arkansas, 227 U. S. 389, 33 Sup. Ct. 294, 57 L. Ed. 565; Rogers v. Arkansas, 227 U. S. 401, 33 Sup. Ct. 298, 57 L. Ed. 569; Dozier v. Alabama, 218 U. S. 124, 30 Sup. Ct. 649, 54 L. Ed. 965, 28 L. R. A. (N. S.) 264; Rearick v. Pennsylvania, 203 U. S. 507, 27 Sup. Ct. 159, 51 L. Ed. 295; Caldwell v. North Carolina, 187 U. S. 622, 23 Sup. Ct. 229, 47 L. Ed. 336. Stewart v. Michigan, supra, is much

like the case at bar. Whether a previous practice of the company would have subjected it to the ordinance need not be determined. It had been abandoned, and the company had a right to adopt that presented here. It was not subterfuge to do so.

It is also urged that the case does not involve the requisite jurisdictional sum or value. It was sufficiently alleged in the verified bill of complaint and denied in the unverified answer. The city attorney filed an affidavit for use in opposition to an application for a temporary injunction, briefly stating that the amount in dispute was less than the sum or value required. There was no plea to the jurisdiction. The equity rules of February 1, 1913 (198 Fed. xix–xlii, 115 C. C. A. xix–xlii), authorizing the making of the objection by answer, were not then in force. But, passing the question of practice, we think the jurisdictional condition may reasonably be gathered from the record, though no testimony was directed specifically to that point.

[2] It is further urged that the controversy should have been left to the state courts, where prosecutions had been begun and were pending. But those prosecutions were excepted from the decree of injunction. The evidence showed that the city authorities had arrested the agent of the company several times, and threatened to arrest him every time he went there and transacted business. The decree of the trial court was right. It looked to the future, not to pending prosecutions in the local courts, and was to protect the right to engage in interstate commerce.

The decree is affirmed.

(217 Fed. 967)

ILLINOIS CENT. R. CO. v. BEHRENS.

(Circuit Court of Appeals, Fifth Circuit. December 8, 1914.)

No. 2317.

In Error to the District Court of the United States for the Eastern District of Louisiana; Rufus E. Foster, Judge.

Action at law by Joseph Behrens, administrator of John Joseph Behrens, deceased, against the Illinois Central Railroad Company. Judgment for plaintiff, and defendant brings error. Reversed.

See, also, 192 Fed. 581, and 233 U. S. 473, 34 Sup. Ct. 646, 58 L. Ed. 1051, Ann. Cas. 1914C, 163.

Gustave Lemle and W. Catesby Jones, both of New Orleans, La., for plaintiff in error.

Armand Romain, of New Orleans, La., for defendant in error.

Before PARDEE, Circuit Judge, and MAXEY, District Judge.

PARDEE, Circuit Judge. This is an action based on the Act of Congress of April 22, 1908, c. 149, 35 Stat. 65 (Comp. St. 1913, §§ 8657–8665), known as the "Employers' Liability Act," brought by the defendant in error, as administrator of John Joseph Behrens, against the plaintiff in error, for damages for the death of his intestate, alleged to have been caused by the negligence of the plaintiff in error. There was an answer denying the averments of the petition, and especially denying that at the time of the alleged injury to John Joseph Behrens either he or the engine causing the injury was engaged in interstate commerce.

On the trial the following facts were proved: John Joseph Behrens was killed in a head-on collision between trains of the Illinois Central Railroad

and of the New Orleans Terminal Companies during the night of November 28, 1909, in the city of New Orleans, state of Louisiana. The deceased was at the time of his death in the employ of the Illinois Central Railroad Company as a fireman, and was one of a crew attached to a switch engine that operated exclusively within the city of New Orleans, state of Louisiana. The general employment of said switching crew using said engine was to handle over the company's tracks and other tracks in the said city of New Orleans both intrastate and interstate commerce indiscriminately; that is, they might on one trip handle cars that were brought into the city of New Orleans from without the state of Louisiana, or a mixed train containing cars, either loaded or empty, brought into the city of New Orleans from without the state of Louisiana, and cars loaded with freight moving entirely within the state of Louisiana, and on another trip a train made up of cars, either empty or loaded with freight originating wholly within the state of Louisiana and moving to a point within said state.

At the time of the collision which resulted in Behrens' death, the train on which Behrens was working consisted of the said switch engine and 13 cars loaded with sugar that originated in the state of Louisiana and were destined to another point within the state of Louisiana, namely, Chalmette, La. At Chalmette said switching engine and crew were to take up other cars, either loaded or empty, belonging to various railroad companies, and take them to Harrahan, La., and there turn them over to the yardmaster, who was to deliver them to various railroad systems to be transported to points within and without the state.

The case shows that, after the evidence had been concluded, the defendant below, in the presence of the jury, and before the jury had retired to consider its verdict, moved the court to peremptorily instruct the jury to find for the defendant, for the reason that the said train upon which said John Joseph Behrens was injured was purely an intrastate train, and therefore neither the said John Joseph Behrens nor the defendant company were engaged in interstate commerce at the time of the alleged injury, and that the plaintiff suing in his capacity as administrator had no right to recover. The court refused to grant the request to so specially charge, and exceptions were duly reserved; and, further, thereafter the court instructed the jury, over the objections and exceptions of the plaintiff in error as follows:

"This suit is brought under the act of April 22, 1908, known as the 'Employers' Liability Act.' It provides that every railroad while engaged in interstate commerce shall be liable in damages to any persons suffering injury while employed by such carrier in such commerce, and in case of death to his personal representative for the benefit of the employé's parents. I have omitted, of course, a large portion of the act not material to this case. The testimony is undisputed that at the time the accident occurred the deceased was employed as a member of the crew of an Illinois Central switching train, or transfer train, composed of the engine and 13 loaded cars, all of which originated in the state of Louisiana and were destined to another point in the state of Louisiana. It is also shown that the general employment of this switching crew was to handle both intrastate and interstate commerce; that they might on one trip handle cars that were from without the state, or cars mixed, being both interstate and intrastate, and on another trip a train made up of freight originating and ending wholly within the state, as was the case when the accident occurred. On that state of facts I find as a matter of law, and so charge you, that the deceased was entitled to the benefit of the federal act, and the only thing you have to determine is the question of negligence on the part of the employer, the defendant railroad company."

From an adverse verdict and judgment, the plaintiff in error brings the case to this court for review, assigning as error the refusal of the court to give peremptory instruction in favor of the defendant, and the charge actually given.

After argument and submission, this court, desiring instruction of the Supreme Court of the United States for the proper decision of the propositions of law involved, stated the facts proved in the case, and certified to the Supreme Court the following question, to wit: "At the time of the injury re-

sulting in the death of John Joseph Behrens, was he employed in interstate commerce within the meaning of the Employers' Liability Act approved April 22, 1908?"

This question, so certified, has been answered by the Supreme Court in the negative. See Illinois Central R. Co. v. Behrens, 233 U. S. 473–475, 34 Sup. Ct. 646, 58 L. Ed. 1051, Ann. Cas. 1914C, 163. It follows that the assignments of error as noted were well taken, and the case should be accordingly reversed.

The judgment of the Circuit Court is reversed, and the cause is remanded, with instructions to set aside the verdict and judgment heretofore rendered, and thereafter proceed in accordance with the views expressed in Illinois Central Railroad Co. v. Behrens, supra.

(218 Fed. 1)

HUTTIG SASH & DOOR CO. v. STITT.†

In re TEXAS PLANING MILL & MFG. CO.

(Circuit Court of Appeals, Fifth Circuit. December 1, 1914.)

No. 2616.

1. BANKRUPTCY (§ 440*)—"CONTROVERSY ARISING IN BANKRUPTCY PROCEEDING"—REVIEW—NATURE OF PROCEEDINGS.

Where petitioner filed a claim for materials furnished a bankrupt as a subcontractor, to be used in the construction of a building, and also claimed a lien on property held by the trustee, the issue of petitioner's right to a lien was a controversy arising in the bankruptcy proceedings, and therefore reviewable by a petition to superintend and revise, authorized by Bankr. Act July 1, 1898, c. 541, § 24, subd. "b," 30 Stat. 553 (Comp. St. 1913, § 9608), and was not appealable under section 25, subd. "a" (section 9609).

[Ed. Note.—For other cases, see Bankruptcy, Cent. Dig. § 915; Dec. Dig. § 440.*

For other definitions, see Words and Phrases, Second Series, Controversy Arising in Bankruptcy Proceeding.

Appeal and review in bankruptcy cases, see note to In re Eggert, 43 C. C. A. 9.]

2. BANKRUPTCY (§ 440*)—CLAIM OF LIEN—DISALLOWANCE—MODE OF REVIEW—ESTOPPEL.

Where a building subcontractor became a bankrupt, and it was agreed that a materialman, who had furnished materials for the bankrupt, should file its claim with the referee, together with its claim of lien, and should diligently prosecute such claim to final decision in the bankruptcy court, petitioner having done this, and the referee having denied the claim of lien, the trustee was estopped to claim that the dispute as to petitioner's right to a lien was not a controversy arising in bankruptcy proceedings, reviewable by petition to superintend and revise, under Bankr. Act, § 24, subd. "b."

[Ed. Note.—For other cases, see Bankruptcy, Cent. Dig. § 915; Dec. Dig. § 440.*]

3. MECHANICS' LIENS (§ 3*)—RIGHT TO LIEN—CONSTITUTIONAL PROVISIONS.

Const. Tex. art. 16, § 37, providing that mechanics, artisans, and materialmen of every class shall have a lien on the buildings and articles made or repaired by them for the value of their labor done thereon or materials furnished therefor, and the Legislature shall provide by law for

*For other cases see same topic & § NUMBER in Dec. & Am. Digs. 1907 to date, & Rep'r Indexes

 † Rehearing denied January 11, 1915.

the speedy and efficient enforcement of such liens, gives a lien to the classes of persons therein named, which exists independent of statute, so that, though the statutes of the state may provide for liens in addition to those provided for by the Constitution, they cannot impair or detract from the rights to liens confered by the constitutional provision.

[Ed. Note.—For other cases, see Mechanics' Liens, Cent. Dig. § 4; Dec. Dig. § 3.*]

4. MECHANICS' LIENS (§ 106*)—RIGHT TO LIEN—MATERIALMAN.

Where a bankrupt had a subcontract to furnish a building contractor with certain material and millwork called for by the general contract for the construction of a building, to be used by the contractor in the work, and the bankrupt, though having nothing to do with the placing of the material in the building, in order to perform its contract, contracted with petitioner to manufacture and furnish certain material and millwork called for by the bankrupt's contract in accordance with details furnished to petitioner for the manufacture of such materials, the same having been manufactured, supplied to the bankrupt, and used by the contractor in the building, petitioner was entitled to a lien under Const. Tex. art. 16, § 37, providing that mechanics, artisans, and materialmen of every class shall have a lien on the buildings and articles made or repaired by them for the value of their labor done thereon or materials furnished therefor.

[Ed. Note.—For other cases, see Mechanics' Liens, Cent. Dig. § 138; Dec. Dig. § 106.*]

Petition for Revision of Proceedings of the District Court of the United States for the Northern District of Texas, in Bankruptcy; Edward R. Meek, Judge.

Petition to superintend and revise an order of the District Court in favor of J. W. Stitt, trustee in bankruptcy of the Texas Planing Mill & Manufacturing Company, denying the right of petitioner, the Huttig Sash & Door Company, to a lien on property held by the trustee. Petition granted, order reversed, and cause remanded.

George Q. McGown and E. T. Murphy, both of Ft. Worth, Tex., for petitioner.

George W. Steere, of Ft. Worth, Tex., for respondent.

Before PARDEE and WALKER, Circuit Judges, and CALL, District Judge.

WALKER, Circuit Judge. [1] We do not think that the motion to dismiss the petition to superintend and revise is well taken. The ground stated in the motion is that the proper remedy open to petitioner was an appeal under subdivision "a" of section 25 of the Bankruptcy Act, and not a petition to superintend and revise under subdivision "b" of section 24 of that act. The claim filed by the petitioner against the bankrupt estate was for the sum of $1,484.30, $1,157 of which he claimed was secured by a lien on property held by the trustee in bankruptcy. The total amount claimed was allowed as an unsecured debt, but the asserted right to a lien was denied. The claim presented was not rejected, so as to confer upon the claimant the right to appeal given by subdivision 3 of section 25a of the Bankruptcy Act. Only the asserted right to a lien for a part of the amount of the claim was denied. In this respect the case was different from the one considered in Matter of Loving, 224 U. S. 183, 32 Sup. Ct. 446, 56 L. Ed.

*For other cases see same topic & § NUMBER in Dec. & Am. Digs. 1907 to date, & Rep'r Indexes

725, in which the claim, as it was presented, was rejected, with the result of giving the claimant the right to appeal from the judgment "rejecting a debt or claim," etc. It is also unlike the case of Coder v. Arts, 213 U. S. 223, 29 Sup. Ct. 436, 53 L. Ed. 772, 16 Ann. Cas. 1008, in which an appeal was held proper, as the matter sought to be reviewed was a judgment allowing the claim made and the asserted lien for its security.

We understand the opinion in the last-mentioned case to recognize the propriety of a resort to a petition to superintend and revise under subdivision "b" of section 24 of the Bankruptcy Act, when the claimant complains of a supposed mistake of law made, not in the rejection of his claim, which in fact was allowed for its full amount, but in the court's exercise of its incidental right to consider and determine the validity of the lien for a part of the amount of the debt claimed asserted upon property in the hands of the bankrupt's trustee. The claimant has no right of appeal in such a case, his claim as he presented it having been allowed, and he may resort to a petition to superintend and revise the action of the court in dealing with an incident of that claim, the asserted right to a lien. The controversy resulting from the assertion of the right to a lien on the bankrupt's property to secure part of the allowed debt owing by him is to be regarded as one arising in the bankruptcy proceeding, within the meaning of section 24 of the Bankruptcy Act, and the order by which that controversy was disposed of is subject to review in the manner provided for by subdivision "b" of that section. Hutchinson v. Otis, 190 U. S. 552, 23 Sup. Ct. 778, 47 L. Ed. 1179; In re Doran, 154 Fed. 467, 83 C. C. A. 265; Holden v. Stratton, 191 U. S. 115, 24 Sup. Ct. 45, 48 L. Ed. 116.

[2] Furthermore, we think that an agreement, set out in the record, which the bankrupt, his trustee, the original contractor, and the claimant entered into before the latter presented his claim against the bankrupt estate, and in pursuance of which the claim was presented, shows that it was distinctly recognized by all parties that the subject of controversy between the creditor on one side and the bankrupt and his trustee on the other side was the legal question of the right of the former, under the state of facts which was agreed upon, to the lien claimed, and that it was understood that that question would be presented as a controversy arising in the bankruptcy proceeding on a claim to be filed by the creditor for the full amount of the debt due to it. The substance of one of the provisions of that agreement was that the creditor would in due time file with the referee in bankruptcy a properly proven claim for the amount of its debt against the bankrupt, claiming, because of the furnishing of the materials and millwork as above stated, a mechanic's and materialman's lien upon the building in the construction of which they were used and upon the lot on which that building was erected, and that it would diligently prosecute said claim to a final decision in the bankruptcy court. In view of that agreement, and of the creditor's proceedings in conformity with its terms, it hardly is consistent for the bankrupt or its trustee to contend that the action of the court in determining the legal question in dispute was not the disposition of a controversy arising in the bankruptcy proceedings in the manner contemplated by the parties to it, or that that disposition of

that legal question is not subject to be reviewed on a petition to superintend and revise the action of the court in the matter of law so arising in the bankruptcy proceeding on the claim as it was presented pursuant to the agreement. It was in effect agreed in advance that the disputed question of law should arise in the proceedings in bankruptcy on the creditor's claim for the full amount of the debt owing to it, only a part of which amount was claimed to be secured by the asserted lien; and the record shows that it did so arise, as contemplated by the parties.

The controversy in this case is as to the asserted right of the claimant to a lien on a building for the price of certain material and millwork supplied by it under a contract with the bankrupt and which was used in the construction of that building. One McCoy was the original and general contractor for that building. Under a contract with him the bankrupt undertook to furnish to him certain material and millwork, called for in the contractor's contract with the owner of the building, and to be used by the contractor in the construction of the building; the bankrupt having nothing to do with the placing of the material and millwork in the building. The bankrupt, in turn, in order to perform its contract with McCoy, entered into an agreement with the claimant whereby the latter undertook to furnish to the bankrupt certain material and millwork called for by the bankrupt's contract with McCoy. Under this agreement the bankrupt made and caused to be made details from the plans and specifications of the building, and supplied these details to the claimant to be observed by the latter in the manufacture and supply of the material and millwork called for by its contract with the bankrupt. The claimant manufactured and supplied the material and millwork in accordance with those details, shipped the same to McCoy, as directed by the bankrupt, and the things so supplied were accepted by both the bankrupt and McCoy as being the same as were called for by the latter's contract for the building, and were used and placed by McCoy in the construction of the building. The referee found that the claimant had complied with the statutory requisites for fixing a lien, but denied it the lien asserted by it. The order of the referee to this effect was affirmed by the District Court.

[3] Section 37 of article 16 of the Constitution of the state of Texas provides that:

> "Mechanics, artisans and materialmen, of every class, shall have a lien upon the buildings and articles made or repaired by them, for the value of their labor done thereon, or material furnished therefor; and the Legislature shall provide by law for the speedy and efficient enforcement of said liens."

This provision, as it has been construed by the Supreme Court of Texas, gives a lien to the classes of persons therein named, and such lien exists independent of any statute. That court has expressly recognized that the provision, "in so far as it gives a lien, is as broad as language can make it." Bassett v Mills, 89 Tex. 162, 34 S. W. 93; Warner Elevator Mfg. Co. v. Maverick, 88 Tex. 489, 30 S. W. 437, 31 S. W. 353, 499. Statutes may provide for liens in addition to those provided for by the Constitution, but cannot impair or detract from the rights to liens which the quoted provision of the Constitution confers.

A Texas statute (article 5621, Rev. Civil Stat. of Texas 1911) provides as follows:

"Any person, or firm, lumber dealer, or corporation, artisan, laborer, mechanic, or subcontractor, who may labor or furnish material, machinery, fixtures or tools to erect any house or improvement or to repair any building or improvement whatever, * * * within this state under or by virtue of a contract with the owner or his agent, trustee, receiver, contractor or contractors, upon complying with the provisions of this chapter, shall have a lien on such house, building, fixtures, * * * to secure payment for the labor done, lumber, material, machinery or fixtures * * * furnished for construction or repair."

In the case of Bassett v. Mills, supra, the question was presented of the right under this statute to a lien claimed by one who furnished labor and material for a building to a subcontractor; the claimant having had no dealing with the original contractor. It is to be noted that the statute does not in express terms provide for a lien in favor of such a person. In deciding that there was a lien as claimed, the court, in the course of the opinion rendered, said:

"It is by no means clear from this statute, standing alone, that laborers or materialmen contracting with a subcontractor were intended to be included in its benefits. But section 37 of article 16 of our Constitution provides that 'mechanics, artisans and materialmen of every class, shall have a lien upon the buildings and articles made or repaired by them for the value of their labor done thereon or material furnished therefor; and the Legislature shall provide for the speedy and efficient enforcement of such liens.' This provision, in so far as it gives a lien, is as broad as language can make it. It includes materialmen who furnish material, though to a subcontractor, as well as those who furnish it to an original contractor. This does not prohibit the Legislature from providing for liens in cases not mentioned; nor, as we have held, does it prevent the Legislature from making reasonable regulations for the enforcement of the liens provided for in the section. But it does not (?) make it the duty of the Legislature to provide a speedy and efficient remedy for the enforcement of the rights conferred. The purpose of the act of April 5, 1889, was not only to declare the liens created by the Constitution, and to give liens in other cases, but also to provide a remedy by which they could be secured and enforced. The latter it was their duty to do; and one of two propositions is true—either the act was intended to apply to those who contracted with subcontractors, or the Legislature has neglected its duty. If the act does not apply to that class of claimants, then the Legislature has omitted to confer upon them the benefits of provisions which it has made for others, and has been derelict in the performance of a duty expressly imposed by the Constitution. A failure to obey a requirement of the fundamental law, which the members take oath to support, should not lightly be imputed to the Legislature; and where a statute is capable of two constructions, one of which would give effect to a positive requirement of the Constitution, and the other would leave a duty unperformed, the former should prevail. If those who deal with a subcontractor are included within the provisions of the act, then the plaintiff in error is entitled to a lien, not only upon the improvements, but also upon the lots upon which they are situate." Bassett v. Mills, 89 Tex. 162, 167, 34 S. W. 93, 95.

[4] While what was decided in that case was that there was a lien in favor of all persons who labor upon or furnish materials for the work, whether the contract under which this was done was with the owner, the original contractor, or a subcontractor, yet nothing said in the opinion indicates that the lien would not exist in favor of one who furnished material for use in the building under a contract, not with either the owner, the contractor, or a subcontractor, but with another

materialman, who had contracted with the original contractor to supply material for the building. On the contrary, the expressions used in the opinion are persuasive in support of the conclusion that the constitutional and statutory provisions in question are to be so liberally construed in favor of the classes of persons sought to be protected as to make them cover the case of a materialman who furnishes material for the construction of a building, though he does so under a contract, not with the owner, the contractor, or a subcontractor, but with another materialman who had a contract with the original contractor to furnish that material for that building. The materialman belongs to a class provided for, if the material he furnished was for use in the particular building in which it was in fact used. 27 Cyc. 48.

We are of opinion that the facts of the instant case bring the claimant within the scope of the provisions mentioned. The materials he supplied were manufactured pursuant to details furnished to him from the plans and specifications of the particular building, in the construction of which they were actually used. Materials manufactured and supplied in such circumstances are to be regarded as furnished, not as a manufacturer or dealer furnishes from his stock goods to a purchaser, without regard to their destination or the use to which ultimately they may be put by the purchaser, but for the purpose of being used in the particular building, the plans and specifications presumptively exclusively applicable to which were conformed with in their manufacture and preparation. The claimant could not well have supposed that the material and millwork he furnished were to be used otherwise than in the structure the plans and specifications for which were followed in their production. The conclusion is that he was entitled to the lien as claimed. Any other conclusion would hardly be consistent with the broad and liberal provisions of the law under which the claim of the right to a lien is made.

The petition is granted, the order of the court below is reversed, and the case is remanded for further proceedings in conformity with the conclusions above stated.

(218 Fed. 6)

HUFF et al. v. BIDWELL et al.

MAYOR AND COUNCIL OF CITY OF MACON et al. v. HUFF et al.

(Circuit Court of Appeals, Fifth Circuit. October 27, 1914.)

No. 2533.

1. INSOLVENCY (§ 188*)—DISTRIBUTION OF ESTATE—COUNSEL FEES.

A court of equity has power to allow a fee to the solicitor of an insolvent defendant, whose estate is being administered, to be paid from the fund in court; but, if it appears on final distribution that the assets are sufficient to pay all debts and leave a surplus, it is not the province of the court either to fix the fee or to charge it upon the fund.

[Ed. Note.—For other cases, see Insolvency, Cent. Dig. § 309; Dec. Dig. § 188.*]

*For other cases see same topic & § NUMBER in Dec. & Am. Digs. 1907 to date, & Rep'r Indexes

2. INSOLVENCY (§ 109*)—DISTRIBUTION OF ESTATE—INTEREST.
The rule that, in the administration of insolvent estates, interest is not allowed after the commencement of the proceedings, applies only as between creditors who stand upon an equal basis, and not to a creditor having a prior lien on specific property in favor of unsecured creditors, nor where the estate proves sufficient to pay all creditors, with interest.
[Ed. Note.—For other cases, see Insolvency, Cent. Dig. § 173; Dec. Dig. § 109.*]

3. INSOLVENCY (§ 185*)—INVOLUNTARY PROCEEDINGS—COSTS.
Where a temporary receiver was improvidently appointed in a proceeding in insolvency against the defendant, the costs of the receivership are properly taxable against the complainants who procured it.
[Ed. Note.—For other cases, see Insolvency, Cent. Dig. § 306; Dec. Dig. § 185.*]

4. INSOLVENCY (§ 185*)—DISTRIBUTION OF ESTATE—COSTS OF COLLATERAL LITIGATION.
Complainants in proceedings in insolvency against a debtor were justified in resisting payment of paving assessments against property of the defendant, where their validity was doubtful, and are not personally liable for the costs of such litigation, although they were unsuccessful; nor are they personally liable for such assessments because of a tender made by them, and not accepted, which was presumably made on behalf of the estate.
[Ed. Note.—For other cases, see Insolvency, Cent. Dig. § 306; Dec. Dig. § 185.*]

5. INSOLVENCY (§ 185*)—ADMINISTRATION OF ESTATE—CLAIMS FOR TAXES.
County and municipal taxes, assessed upon property being administered by a court in insolvency proceedings against the owner, are a part of the costs of administration, and cannot be required to contribute to the payment of solicitors' fees awarded the complainants, but are entitled to payment in full, with interest.
[Ed. Note.—For other cases, see Insolvency, Cent. Dig. § 306; Dec. Dig. § 185.*]

6. INSOLVENCY (§ 188*)—DISTRIBUTION OF ESTATE—COSTS AND EXPENSES.
Where a mortgagee, made a defendant in insolvency proceedings against the mortgagor, adopts such proceedings for the purpose of enforcing its lien, it may properly be required to contribute to the payment of a solicitor's fee awarded to the complainants from the fund in court.
[Ed. Note.—For other cases, see Insolvency, Cent. Dig. § 309; Dec. Dig. § 188.*]

Appeals from the District Court of the United States for the Southern District of Georgia; Emory Speer, Judge.

Suit in equity by William L. Bidwell and others against William A. Huff and others. From the decree defendants, as well as the Mayor and Council of the City of Macon and the County of Bibb, as interveners, separately appeal. Reversed in part.

See, also, 151 Fed. 563, 81 C. C. A. 43; 176 Fed. 174.

Du Pont Guerry and Thos. S. Felder, all of Macon, Ga., for appellants Huff and others.

Walter G. Smith, Andrew W. Lane, N. E. Harris, Walter A. Harris, T. E. Ryals, R. L. Anderson, Alexander Akerman, and J. E. Hall, all of Macon, Ga., opposed.

Before PARDEE, Circuit Judge, and CALL and GRUBB, District Judges.

*For other cases see same topic & § NUMBER in Dec. & Am. Digs. 1907 to date, & Rep'r Indexes

GRUBB, District Judge. This is the fifth appeal in this case. The cause now comes before the court upon the appeal of a number of the parties from the decree of the court below distributing the proceeds of the various sales of the properties in the possession of the receiver, some made by consent of the parties, and some under the former decree of the court below, which was affirmed by this court upon a former appeal. The various appellants are the defendants, W. A. Huff, individually and as trustee for his children, Edison Huff and Mrs. Jennings, also Edison Huff and Mrs. Jennings, individually, the mayor and council of the city of Macon, the county of Bibb and its tax collectors, and the Scottish-American Mortgage Company, Limited. The grievances complained of by each appellant are different.

The defendants, W. A. Huff, Edison Huff, and Mrs. Jennings, present the following objections to the decree: (1) The defendant W. A. Huff complains of the allowance by the court below of a solicitor's fee to his former solicitor, Alexander Proudfit, out of the surplus, if any, coming to defendant W. A. Huff. (2) They all complain of the allowance by the court below of interest on the claims of the plaintiff, and the claims of the various interveners, including the claims for taxes and assessments. (3) They all complain that the decree failed to tax the costs of the temporary receivership against the plaintiffs, as directed by the opinion of this court on a former appeal. (4) They all complain that the costs accruing upon the contested paving assessment of the city of Macon were not taxed against the plaintiffs, wholly or partly. (5) They all complain that the plaintiffs were not required to pay the paving assessment, and not the fund, by reason of the tender made by plaintiffs upon the hearing of one of the former appeals in this court. (6) They all complain that the property known as the Armory property was not turned over to them, its sale having been determined not to be necessary to pay the defendant's debts. (7) The defendants Edison Huff and Mrs. Jennings complain that they were not accorded a hearing before the master or the court, in the court below, upon their claim to a seventh interest each in the proceeds of the sale of certain of the tracts of land sold under the former decree, and of a like interest in certain of the rents alleged to have been collected by the receivers from certain of the properties in their possession, in which the defendants Edison Huff and Mrs. Jennings each claimed an undivided interest.

The appellant the mayor and council of the city of Macon complains of the decree because by its terms the city was taxed with a proportionate part of the solicitor's fee allowed the plaintiffs by the court below, and because no interest was allowed upon the amount of its paving assessment beyond March 5, 1906, the date mentioned in the opinion of this court upon a former appeal.

The county of Bibb and its tax collectors complain of the decree because they were, by its terms, required to contribute their proportionate part to the solicitor's fee allowed to the plaintiff.

The Scottish-American Mortgage Company, as appellant, complains of the decree for the same reason.

[1] Considering first the first complaint of the defendant W. A. Huff, based upon the allowance of a counsel fee, fixed by the court

below and charged against the fund, to the former solicitor of the defendant:

The original bill of complaint was framed upon the theory that the defendant W. A. Huff was insolvent, and upon the consequent necessity of selling his assets for the purpose of paying his debts. We have no doubt of the power of a court of equity to protect the solicitor of an insolvent defendant, whose assets are being administered through the court, in the collection of a reasonable fee for the services to the insolvent, by charging it against the fund being administered. In the absence of such authority, the insolvent's solicitor would be without protection; the court having seized all the assets of the insolvent, and there being no other resort for the collection of the solicitor's fee than the fund in court. In this case it is not contended that the fee allowed was not reasonable. The property of the defendant sold for enough to pay the charges against him, by reason of its enhancement in value after the filing of the bill and after the determination of defendant's insolvency, so that there is an apparent surplus at the present time, which may be returned to the defendant, and out of which, if not consumed, he will be able to pay his solicitor. It is clear that the court would have no authority to fix and collect the fee of a solicitor out of a solvent defendant, with the ability to arrange payment therefor himself. In such a case the collection of the fee and its amount is a matter of voluntary contract between the defendant and his solicitor, with which the court will not interfere. As it is not necessary for the court to fix the fee of defendant's solicitor and make it a charge on the fund in court, until it is determined whether there will be a surplus to be returned to the defendant after the payment of all charges and costs, we do not think that the apparent insolvency of the defendant, at a previous stage of the proceedings, would justify the court's intervention in this respect, if, in fact, it turned out ultimately that there was a surplus for the defendant. In this case, if it turns out that there is a surplus coming to the defendant ample in amount to cover the fees of his solicitors, we think there should be no fee fixed by the court and charged against and collected from the fund. On the other hand, it upon the final distribution the apparent surplus now existing is exhausted, and the defendant is left without means to pay his solicitors, then we think the action of the court below in fixing a reasonable fee, and directing that it be charged against the fund, should be sustained.

[2] 2. The defendant W. A. Huff, individually and as trustee, also complains that interest was allowed by the court upon the claims, including the secured and unsecured claims, and those for taxes and paving, while the property of the defendant was held by the court for the purpose of being subjected to the payment of his debts, and especially after its sale and the deposit of the proceeds of the sales to the credit of the cause in depositories where they drew no interest.

It is true that in the settlement of insolvent estates, and as between creditors, who stand on an equal basis and none of whom will receive payment in full, as a matter of convenience, for the purpose of distribution, interest stops as to all upon the filing of the proceeding. But this principle does not prevail as against a creditor having a prior lien on specific property, in favor of one having no such lien. First Na-

tional Bank v. Ewing, 103 Fed. 168, 43 C. C. A. 150. Nor does it prevail where the estate of the alleged insolvent turns out to be ample to pay all his creditors in full of principal and interest. This is the holding of the Supreme Court in the recent case of American Iron & Steel Co. v. Seaboard R. R. Co., 233 U. S. 261, 34 Sup. Ct. 502, 58 L. Ed. 949, distinguishing such a case from that considered in the case of Thomas v. Western Car Co., 149 U. S. 95, 13 Sup. Ct. 824, 37 L. Ed. 663, cited and relied upon by the appellant. While the allowance of interest in favor of the creditors, while the fund out of which they might have been earlier paid, remained in the registry of the court drawing no interest, works a manifest hardship on the defendants, it is one to be attributed to a delay, partly at least, caused by the defendants, and is one which the court is without power to remedy. The former decree of sale of January 6, 1906, affirmed by this court, provided for the running of interest on some, if not all, of the claims, and is conclusive in that respect on the parties to the cause on this appeal. We think that interest was properly allowed on all the claims, including the tax claims and paving assessments, and should continue to run as against defendants until they are paid.

[3] 3. We think the plaintiffs should be taxed with the costs of the temporary receivership in this cause, which was held by us to have been improvidently granted, as was directed to be done in the opinion of this court upon the first appeal in the cause. Huff et al. v. Bidwell et al., 151 Fed. 563, 81 C. C. A. 43. While the mandate may have contained no specific direction as to these costs, concerning itself only with the costs in this court, we think the direction of the court contained in its opinion should have been followed in the court below, and that the amount of such costs, which have been separately ascertained, should be deducted from the amounts coming to the plaintiffs upon the final distribution.

[4] 4. The defendant W. A. Huff also complains that the costs, incurred in the litigation relating to the validity of the paving assessments of the city of Macon, were taxed against the fund, instead of wholly or partly against the plaintiffs. The contention in this respect is that the litigation was unsuccessful, that the plaintiffs tendered the amount of the assessment, after having litigated it at great expense, and without benefit to the defendants or their property.

We think the doubt concerning the validity of the assessment, in view of the then decisions of the Supreme Court of the United States with reference thereto, justified the plaintiffs in making the contest, though it turned out to be fruitless, and that the costs were properly charged against the fund. The duty of the plaintiffs to resist an illegal assessment is manifest.

5. The claim is also made, in this connection, that the tender by the plaintiffs of the amount of the paving assessment to the city of Macon in this court made it the duty of the plaintiffs to pay the amount personally and not out of the fund. The plaintiffs, in a sense, were the representatives of the fund being administered, and conducted the litigation with reference to the validity of the assessment in their representative capacity, and because of their duty to resist an illegal as-

sessment, and in making the tender will be presumed to have intended to make it good out of the fund or property, for the benefit of which the litigation had been conducted by them. The opinion by this court upon appeal from the final decree of January 6, 1906, as we construe it, directs that it be so paid; the tender not having been accepted by the city of Macon. The court below properly charged the amount against the fund.

6. The defendants, W. A. Huff, Edison Huff, and Mrs. Jennings, also complain because the court failed to grant their application for the return of what is known as the Armory property; it having been reserved from sale because of the apparent sufficiency of the other property sold to pay the debts and charges without resort to it. This surplus, as found by the master, was approximately $8,000, from which, at that time, was to be deducted only one-half of the master's fee, amounting to $750. In view of the additional charges against the fund in the way of interest and costs, pending this appeal, and the possible further delay, and reduction of the fund due to it, and to any possible allowance out of it to the defendants Edison Huff and Mrs. Jennings for any interest they may establish in any of the lands sold, from which the fund was realized, we are not prepared to say that it clearly appears that the Armory property will not have to be resorted to in the future of the cause. It would seem to depend upon whether the parties proceed with the purpose of settling the few remaining questions economically and expeditiously, or in the way that seems to have been typical of the case up to this time. When, if at all, it does appear that any property seized by the court will not have to be resorted to for the purposes of the litigation, it should be promptly surrendered to the defendants by the court, leaving them to settle whatever interventions may then be pending with reference to the ownership of portions of the property in a forum of their selection, or that of the adverse claimants, who have intervened in this cause, to establish their claims.

7. The defendants Edison Huff and Mrs. Jennings also complain because they were not given a hearing either before the master or before the court upon their claim to an undivided two-sevenths interest in certain of the lands sold under the former decree of the court below. Before the decree of sale was passed, these defendants, who had been made parties defendant, either originally or theretofore, applied to the court for leave to file a cross-bill against their codefendant, the Scottish-American Mortgage Company, Limited, for the purpose of asserting a two-sevenths interest in certain of the lands, on which that company claimed a specific lien by a security deed, executed while the defendants were minors, and claimed to have been ratified by them on attaining their majority. The court below denied the defendants leave to file their cross-bill, in the same order expressly reserving their rights to assert their claim, if any they had, after sale, to the proceeds of the sale, in this language:

"It is further ordered that said respondents have leave to file appropriate proceedings and set up their rights, if any, to any portion of the fund, arising from the sale of the property, in which they claim an interest."

In his opinion, denying leave to file the cross-bill, the District Judge said:

"The court, perhaps, might be justified in holding that since, with full knowledge of their rights during the pendency of the main litigation, they failed by proper proceedings to seek the relief now claimed, they are barred from seeking it now. However, leave to file pleadings, appropriate to protect their alleged interests even after final decree, would seem under the circumstances within the discretionary power of a court of equity, and, as stated, such leave will be allowed."

In pursuance of this determination, the court below incorporated in the final decree a provision to the effect that:

"Nothing herein provided with reference to the payment of costs and expenses shall apply to the one-seventh interest to which Mattie J. C. Jennings, formerly Huff, and Edison Huff may be respectively entitled after the payment of the taxes against the properties in which they are respectively interested, and after the payment of any specific liens against such property; but the entire and unincumbered title to all of the properties shall be sold, and the said Mattie J. C. Jennings, formerly Huff, and the said Edison Huff, shall receive their respective shares of the proceeds without diminution, except for taxes and the payment of such specific liens as are chargeable against the properties in which they are interested."

In pursuance of this decree all the properties, except the Armory property, have been sold in their entirety and free from liens. No sales were made under the decree until the year 1909; it having been appealed from by the defendants. Prior to September 20, 1909, the defendants Edison Huff and Mrs. Jennings filed a petition for the allowance of a rule nisi, to be served on all parties to the cause, to show cause why the receivers should not be directed to pay to the defendants their respective interest in the funds in their hands. The application was denied by the court below on September 20, 1909, assigning as a reason that it should be postponed until the whole fund was ready for distribution. The bulk of the property was not sold until December, 1909. Again on June 24, 1911, the defendants Edison Huff and Mrs. Jennings filed another application to have paid to them their interest in the funds in the hands of the receivers, arising from the sales of lands and the rents, accruing to their claimed two-sevenths interests. On July 6, 1912, the said defendants filed with the master, to whom the matter of distribution had been referred for report, certain requests for the recognition of their two-sevenths interest in the funds in the hands of the receivers. The master's report allowed the defendants a two-sevenths interest in what is known as the Kimball House property and in two tracts of what is known as the Vinesville property, amounting to, after proper deductions for taxes, $6,110.76, and reported to the court that under the then state of the pleadings there was no adjudication that Edison Huff and Mrs. Jennings were entitled to any further interest in the fund in court, assigning as a reason for his conclusion that the final decree, to which they were parties, recognized their two-sevenths interest in the proceeds of the Kimball House and two tracts of the Vinesville property, but disposed of all the other property of the defendant W. A. Huff, individually and as trustee, and the master also reported that the petition of Edison Huff and Mrs. Jennings for two-sevenths interest

was then pending before the court. The decree of distribution, from which the present appeal is taken, followed the master's report, and allowed the defendants Edison Huff and Mrs. Jennings an interest only in the Kimball House and the two tracts of the Vinesville property.

No reason is assigned in the decree of distribution for the court's decision. We do not think the effect of the final decree was to adjudicate that the defendants Edison Huff and Mrs. Jennings had no interest in any of the tracts sold, except the Kimball House and two Vinesville tracts. As we construe it, there was no adjudication that Edison Huff and Mrs. Jennings had any interest in any one of the tracts sold. That question was expressly reserved for determination until after the sale was had under the final decree both by the former orders of the court and by the provisions of the decree of sale itself, and defendants were given leave to then assert their claims to the proceeds of the sales. The final decree disposed of the interest of the defendants Edison Huff and Mrs. Jennings in the Kimball House and Vinesville properties, as well as it did in all the other tracts. Their interests in all the tracts were directed to be sold, without distinction, under that decree, and the proceeds to be distributed as directed. If the court should thereafter sustain the claims of the defendants Edison Huff and Mrs. Jennings as to any or all the tracts sold, the decree of sale reserved to them the right to be paid out of the proceeds of the sale. The adjudication of their interests in all the tracts, including the Kimball House and Vinesville tracts, was postponed for future determination. The lien of the plaintiff Bidwell was confined to a five-sevenths interest in the Kimball House tract, and, in directing the sale of this tract to satisfy Bidwell's lien, a five-sevenths interest only was directed to be sold, for the lien extended to no more. So with the two Vinesville tracts, a five-sevenths interest only in which were mortgaged to the defendant the Scottish-American Company. The order of sale to enforce the specific lien of the Scottish-American Company was limited to a five-sevenths interest, because the lien of that company covered no greater interest. When the decree came to order the sale for general distribution, it directed the sale of the entire interest in all the tracts, including the Kimball House and Vinesville tracts, and not merely an undivided five-sevenths interest in any. It was, therefore, neither an adjudication of a two-sevenths interest in the defendants Edison Huff and Mrs. Jennings to the Kimball House and Vinesville tracts, nor an adjudication of a lack of interest in those defendants in the remaining tracts, because they were by the decree of sale disposed of in their entirety. In fact, all the tracts were disposed of in their entirety, and in the absence of a clause reserving defendants' rights to assert their claim to the proceeds, they would have been concluded by it, as to their alleged interest in all the tracts, including the Kimball House and Vinesville tracts, an interest in which was allowed them by the court below.

The twentieth clause of the decree preserved their right to assert their interest in each tract sold, in spite of the sale, and, if established, to be paid their interest from the proceeds. Before and after the sale

they made application to the court and to the master for a hearing as to their interest in certain of the tracts, other than the three in which they were allowed an interest, and a hearing was denied them, both by the master and the court. If they have the interest they assert, it should not be subjected to pay the debts of their father, for which they are not responsible. Unless they are accorded an opportunity to establish their claim, it is clear this injustice may befall them. For this reason, we deem it imperative to remand the case, with directions to the court below to recommit to the master for the purpose of enabling the master to grant the defendants Edison Huff and Mrs. Jennings an opportunity to be heard upon the claims they assert to the fund in court. These same defendants, by virtue of their claimed two-sevenths interest in certain of the tracts sold, claim a like interest in the rents collected by the receivers from those tracts, and filed a petition for their allowance, and a request with the master to that effect. The master took no action upon their petition and request, and no allowance was made to the defendants on this account in the decree appealed from. The right of these defendants, arising from rents collected by the receivers, should be inquired into by the master also upon the recommittal of the case to him.

[5] Coming to the appeals of the appellants other than those already mentioned, their contention is that they were improperly made to contribute to the solicitor's fee allowed the plaintiffs; each being assessed for that purpose 10 per cent. of the amount of the claim. We think it clear that the claims for taxes and for the paving assessment should not have been made to contribute to this end. These claims were first liens on the respective tracts, and should have first been paid out of any available funds, as they currently accrued. We are unable to see how the tax claimants can be said to have benefited by the litigation. They did not stand on the basis of creditors, but, at least such as accrued after the filing of the bill, were part of the costs of the preservation of the property while in the custody of the court, and would have been properly treated as part of the costs of administration of the insolvent estate. We think they should all be paid, with interest from the time an execution could be legally issued for their collection, and until payment, and without deduction of any kind. We do not think that the recital of the amount due the city of Macon in the former opinion of this court, which included interest only till March 5, 1906, was intended to deprive the city of interest to the date of actual payment. It was undoubtedly contemplated by this court that the amount found due would be presently paid, as directed by the decree. As it has not yet been paid, we can see no reason for disallowing interest to the city, when it has been allowed to all other claimants, some of whose claims were subordinate to the city.

[6] Coming to the contention of the Scottish-American Mortgage Company that it should be relieved from contributing to the solicitor's fee allowed the plaintiffs, its original attitude in the litigation entitled it to such relief. It was brought into the litigation involuntarily, with the purpose of subjecting the equity of redemption in the lands on which it had a lien to the debts of the defendant W. A. Huff. Its lien

had been reduced to judgment in the state court, and the only thing left for it to do was to sell the property under execution issued upon its judgment. Its lien was prior to all other liens, except that for taxes. If this attitude had continued until the present stage of the litigation, it is clear that the involuntary contribution exacted of it would have been improper. Subsequently, however, it changed its involuntary attitude, and seems to have joined with the plaintiffs in seeking the redress prayed for in the bill of complaint. It was given relief on the final decree in the lower court, and on appeal from that decree to this court, while not made a party to the appeal, it was allowed to and did, through its solicitors, file a brief in support of the final decree and asking its affirmance. In this brief it was stated that it was "one of the principal parties to the cause, while pending in the Circuit Court," and "that it is vitally interested in upholding the decree rendered in the cause, having by far the largest interest in the subject-matter, and in the result of the litigation." It also recites that both appellants and itself were originally defendants in the cause, but that "in the course of the litigation appellants instituted a severe attack upon the Scottish-American Company, Limited, which was eventually determined against the appellants, and the issues raised were decreed in favor of the Scottish-American Mortgage Company, Limited." These recitals from its brief show an adoption, as its own, of the litigation into which it was originally brought unwillingly, perhaps, and the use of that litigation by it for its own benefit and purposes. It was benefited by the decree in two respects. It was enabled to convert its lien into money through it, without further proceedings in the state court, and it also was enabled to eliminate the claim of Edison Huff and Mrs. Jennings to an undivided two-sevenths interest in part of the lands upon which it had a lien. The extent of the benefit, as compared with that derived by the plaintiffs and other claimants and interveners, is difficult of determination; but, if reference is had to the brief referred to, its own estimate of that benefit would have justified the court below in calling upon it for at least an equal contribution with other parties to the litigation. Having adopted the litigation for its own purposes, we do not think the court was called upon to determine the amount of benefit derived, and so proportion the assessment, but might assume that it received an equal benefit with the other litigants.

The foregoing discussion disposes of the contentions of the various appellants. The conclusions reached by us require a reversal of the decree appealed from, for the purpose of allowing the defendants Edison Huff and Mrs. Jennings to assert their interests in the fund in court, arising out of their claims to undivided interests in some of the properties sold under the decree and in the rents collected therefrom by the receivers. A modification of the decree appealed from would have accomplished what we have decided, in other respects, and its affirmance, as modified. The reversal of the decree will necessarily cause a further delay in final distribution. The only remaining matter of contest, which requires the reversal of the decree and the remand of the cause, is largely one between the defendant W. A. Huff and his children, the defendants Edison Huff and Mrs. Jennings, who are rep-

resented on this appeal by the same counsel. This is true, at least, if, after allowance to the defendants Edison Huff and Mrs. Jennings, and after taking into consideration the Armory property, there still remains a surplus, after the payment of all debts and charges, equal to the undivided two-sevenths interest of the defendants Edison Huff and Mrs. Jennings. It would manifestly be to the interest of these two defendants, if this be the situation, not to insist upon the further litigation as to their claim to the two-sevenths interest, and thereby prevent the further delay and expense necessary in case of a remand of the case, and they would also thereby acquire the immediate possession of the Armory property. In that event the intervention of the representatives of Alexander Proudfit should be dismissed without prejudice and without costs, in view of the apparent insolvency of the defendant W. A. Huff when it was filed. The decree of distribution, on application to this court, could be modified in other respects in conformity with this opinion, and, as modified, affirmed, and the Armory property surrendered to the defendants, and the pending interventions affecting it dismissed, without prejudice to the rights of the interveners to assert their claims in independent proceedings, if so advised, and the surplus paid over to the defendants.

In order that the injury from the delay may be as little as possible, in the event the case is remanded, there should be a partial distribution of claims having priority, especially those for taxes and paving assessments and that of the Scottish-American Mortgage Company, Limited, as soon after the cause is remanded to the court below as is possible, and the cause should be promptly recommitted to the master to enable him to hear and to determine the claims of the defendants Edison Huff and Mrs. Jennings for their alleged interest in the corpus of certain of the properties, and in the rents thereof, and after such hearing, and the report of the master thereon, to be proceeded with by a decree distributing the remaining fund in conformity with the opinion of this court. The costs of this court, in view of the complicated situation presented by the many appeals from the decree and the discretion permitted the court in the matter of costs, to be taxed against the fund in the registry of the court, except those accruing upon the appeal of the Scottish-American Mortgage Company, Limited, which are to be taxed against the appellant; the decree appealed from having been affirmed, so far as affected by that appeal.

(218 Fed. 55)

GEORGIA S. & F. RY. CO. et al. v. EINSTEIN et al.

(Circuit Court of Appeals, Fifth Circuit. November 3, 1914.)

No. 2666.

1. COURTS (§ 308*)—JURISDICTION OF FEDERAL COURTS—DIVERSITY OF CITIZENSHIP—REARRANGEMENT OF PARTIES.

In a suit in a federal court by the trustees of an insolvent to recover assets, where one of the trustees refuses to join as a complainant, he may be made a defendant, and the fact that he is a citizen of the same state as another defendant does not deprive the court of jurisdiction.

[Ed. Note.—For other cases, see Courts, Cent. Dig. §§ 855, 856; Dec. Dig. § 308.*

Diverse citizenship as a ground of federal jurisdiction, see note to Shipp v. Williams, 10 C. C. A. 249; Mason v. Dullagham, 27 C. C. A. 298.]

2. RAILROADS (§ 152*)—BONDS—TRANSFER PENDING FORECLOSURE—RIGHTS OF PURCHASER.

Complainants were owners of bonds of a railroad company, the mortgage securing which was being foreclosed. The bonds were guaranteed by another railroad company, against which a foreclosure suit was also pending. A bondholders' committee of the latter company, in order to obtain a release of the guaranty to facilitate the foreclosure and reorganization of their company, made an agreement with a committee of the holders of the guaranteed bonds to deliver to it a certain amount of the stock of the reorganized company. Pending the carrying out of this agreement, complainants sold their bonds. *Held* that, in the absence of any express agreement on the subject, the sale of the bonds carried with it to the purchasers the right to receive the stock apportionable to such bonds under the agreement in lieu of the guaranty.

[Ed. Note.—For other cases, see Railroads, Cent. Dig. §§ 465, 466; Dec. Dig. § 152.*]

3. EQUITY (§ 427*)—DECREE—CONFORMITY TO ISSUES.

In a suit in equity to recover stock of a railroad company, the company was made a defendant; but the only relief prayed against it was that it be required to transfer the stock to complainants on its books. It answered, disclaiming any interest in the suit, and offering to perform the decree of the court. *Held*, that a prayer for general relief in the bill did not authorize a money decree against the company for dividends paid to the holders of the stock pending the suit, which was not within the issues.

[Ed. Note.—For other cases, see Equity, Cent. Dig. §§ 1001–1014; Dec. Dig. § 427.*]

4. EQUITY (§ 427*)—DECREE—CONFORMITY TO PLEADINGS.

In general, a prayer for general relief in a bill cannot authorize the granting of relief outside of the case made by the allegations of the bill.

[Ed. Note.—For other cases, see Equity, Cent. Dig. §§ 1001–1014; Dec. Dig. § 427.*]

Appeal from the District Court of the United States for the Western Division of the Southern District of Georgia; Emory Speer, Judge.

Suit in equity by Benjamin F. Einstein and Henry Rice, trustees, and others, against Birney C. Parsons and Francis M. Edwards, partners as Parsons & Edwards, the Georgia Southern & Florida Railway Company, and others. Decree for complainants, and certain defendants appeal. Reversed.

*For other cases see same topic & § NUMBER in Dec. & Am. Digs. 1907 to date, & Rep'r Indexes

Alex C. King, of Atlanta, Ga., and J. Elsworth Hall, of Macon, Ga., for appellants.

Marion Erwin, of New York City, for appellees.

Before PARDEE, Circuit Judge, and GRUBB and CALL, District Judges.

CALL, District Judge. This is an appeal by the Georgia Southern & Florida Railway Company, a corporation organized under the laws of the state of Georgia, having its principal place of business at Macon, in said state, and Birney C. Parsons and Francis M. Edwards, citizens of the state of Massachusetts, doing business as Parsons & Edwards, from a decree rendered in the United States District Court for the Western Division of the Southern District of Georgia, entered February 7, 1914, in a suit in which they were defendants.

The bill of complaint was filed on May 31, 1900, by Benjamin F. Einstein, as assignee of Abraham Backer, and Benjamin F. Einstein and Henry Rice, trustees of Abraham Backer, all citizens of the state of New York, and Rice, Stix & Co., a firm composed of Henry Rice, a citizen of New York, William Stix, Jonathan Rice, Benjamin Eisman, David Eisman, and Elias Mitchael, all citizens of the state of Missouri, in behalf of themselves, and all persons entitled to stock in the Georgia Southern & Florida Railway Company similarly situated to them, against the Georgia Southern & Florida Railway Company, the appellant herein, the Mercantile Trust & Deposit Company of Baltimore, Md., a corporation, a citizen of Maryland, Christian Devries, a citizen of Maryland, the firm of Parsons & Edwards, appellants, the Southern Railway Company, a corporation and citizen of Virginia, and Herman Myers, a citizen of Georgia. The bill of complaint alleges substantially as follows:

The Macon Construction Company was the builder of and holder of all the stock in the Georgia Southern & Florida Railroad Company and the Macon & Birmingham Railroad Company, and, becoming insolvent, was, together with the Georgia Southern & Florida Railroad Company and the Macon & Birmingham Railroad Company, placed in the hands of a receiver by the Bibb county superior court. The Macon Construction Company was indebted to one Abraham Backer in a large sum, and a judgment obtained against it for the amount due. Backer was also holder of some 410 bonds of the Macon & Birmingham Railroad Company, of the face value of $1,000 each. Rice, Stix & Co. were also the holders of 50 of these bonds. The bonds of the Macon & Birmingham Railroad Company had upon each a guaranty by the Georgia Southern & Florida Railroad Company properly executed by said last-named company. The trustees for the bonds of each of the railroads intervened in the Bibb county superior court to foreclose the deeds of trust securing the bond issues. Pools were formed of the bonds of each of the roads, and committees appointed to guard the interests of the bondholders; a very large majority of the bonds being represented, although not all.

The litigation dragged, and the bondholders of the Georgia Southern & Florida Railroad, being desirous to overcome the opposition of

the bondholders of the Macon & Birmingham Railroad Company to the foreclosure proceedings, negotiated with the bondholders' committee of the last-mentioned railroad, and it was finally agreed by the two committees that, in consideration of the withdrawal of opposition to foreclosure and the assistance of the committee, the committee of the Georgia Southern & Florida Railroad Company would, upon the sale of said road and the reorganization of its properties, deliver to said Macon & Birmingham committee certain shares of its second preferred and common stock, and said Macon & Birmingham committee agreed to receive these shares in full satisfaction of the guaranty on the bonds, and to withdraw opposition to the foreclosure proceedings. It was also agreed that the Macon & Birmingham committee should assign to the Georgia Southern & Florida committee judgments against the Macon Construction Company held by some of the bondholders upon request so to do. The failure of the Macon Construction Company caused Backer to fail, and Einstein, Rice, and Myers were made trustees of his property for the benefit of creditors.

In the spring of 1895 the Georgia Southern & Florida Railroad was sold under the foreclosure proceedings, and bought in by the bondholders' committee, and a new corporation, the Georgia Southern & Florida Railway Company was formed, and the properties of the old Georgia Southern & Florida Railroad Company conveyed to the new corporation in consideration of the delivery to the committee of the stock and bonds of the new corporation. Upon this being done the committee of bondholders of the Georgia Southern & Florida Railroad Company notified the committee of the Macon & Birmingham Railroad bondholders that they had the stock as per agreement for delivery, but requiring that the last-named committee should first enforce the judgments against the property of the Macon Construction Company, and deed said property to them for the new corporation, the appellant in this case. This was in June of 1895. In November of 1895 the Macon & Birmingham committee by resolution repudiated the claim of the Georgia Southern committee, and insisted that the contract between them be carried out.

This condition of affairs continued until January, 1896, when the stock of the new corporation was finally delivered in accordance with the contracts between the parties. While negotiations were pending between the two committees as to delivery of the stock, the bonds of the trustees and those of Rice, Stix & Co. were withdrawn from the committee, and sold to Parsons & Edwards, 460 bonds, of the face value of $1000 each, for the sum of $46,000. On June 15, 1896, the Macon & Birmingham committee delivered the pro rata share of the stock in the Georgia Southern & Florida Railway Company to Parsons & Edwards as the owners of the bonds.

The bill also alleges demand on the committee by the trustees for the bonds and refusal, and that Myers, the cotrustee, refused to join in the suit, and was therefore made a party defendant. The bill then prays "that they have transferred to them as their property on the books * * * shares of stock," also that Parsons & Edwards, in the event they have converted said stock, account for the value thereof, and then the prayer for general relief.

[1] Some of the defendants raised the question of the jurisdiction of the court because Myers, one of the trustees, was a citizen of Georgia, and should have been joined as complainant, and the Georgia Southern & Florida Railway Company, one of the defendants, being also a citizen of Georgia, there was not the diverse citizenship required to give the court jurisdiction. This question was raised first by demurrer, which being overruled, was set up by answer. We think there is no question but that the District Court had jurisdiction under the allegations of the bill, and the proofs adduced in support thereof. Omaha Hotel Co. v. Wade, 97 U. S. 13, 24 L. Ed. 917; Wetmore v. Rymer, 169 U. S. 115, 18 Sup. Ct. 293, 42 L. Ed. 682; rule 22 of Old Chancery Rules. There are many other cases that might be cited, but we do not deem it essential.

The answer also pleaded the Georgia statute of four years' prescription as to the title of personal property. The railway company answered that the stock had been delivered to the bonding committee, and it had no interest in the matter.

The cause was referred to a master, to take the testimony and report it, with his findings of fact and law, to the court. The testimony was taken, and the master made his report, and finding of facts and law. He found that the bonds were transferred to Parsons & Edwards without reserve or restriction, and the sale was a complete transfer of said bonds, and all that were appurtenant to them, to wit, both sources to which the holder of the bonds could look for payment, the agreement with the committee of bondholders of the Georgia Southern bonds and the proceeds of the sale of the Macon & Birmingham Railroad, and that Parsons & Edwards, when they bought the bonds, had full notice of all the facts in the case. The master finds against the contention that the claim was barred by the statute of limitations of Georgia, and in conclusion finds the merits against the complainants.

Upon exceptions to this report, the District Judge entered a final decree, sustaining exceptions to said report, challenging the finding of the master that complainants were not entitled to the relief sought, and awarded to the complainants the shares of stock claimed, and further requiring the payment by Parsons & Edwards of a considerable sum received as dividends, and decreeing a lien on all the other stock held by Parsons & Edwards in the Georgia Southern & Florida Railway Company for the payment of said money decree. The decree further requires the railway company to transfer on its books the number of shares claimed, and further requires the payment by the said railway to the complainants of all sums paid as dividends on said stock after the filing of said suit. This portion of the decree makes the railway company jointly with Parsons & Edwards accountable for dividends paid them after the commencement of this suit. It is from this decree that this appeal is taken.

[2] The most serious question to be decided is the effect of the transfer of the bonds to Parsons & Edwards. It was admitted in argument before us that if the bonds were transferred with the guaranty of the Georgia Southern & Florida Railroad Company indorsed upon

them before said guaranty was satisfied and extinguished, without a reservation of the rights under such guaranty, the transfer of the obligation carried the security. At least a majority of the court are of opinion that the transfer was made before the guaranty was extinguished, and had this effect in the instant case. Had the holders of the Backer and Rice, Stix & Co. bonds desired to retain in themselves the right to receive the stock apportioned to said bonds by the agreement between the two bond-holding committees, they should certainly have so stated in the instrument of transfer. This was not done, but, on the contrary, an unconditional transfer was made, and that at a time when it was problematical whether the agreement would be carried out—when it looked probable that, if any stock was received, it would be only after a litigation between the committees. Under the circumstances shown in this record we cannot affirm that the guaranty of the Georgia Southern & Florida Railroad Company was executed and functus officio, and, unless it was, the transfer of the bonds carried with them to the purchaser any securities given for their payment.

[3] We cannot agree with the District Court in that portion of the decree which contains a money decree against the Georgia Southern & Florida Railway Company for the dividends paid on the stock after suit brought. The only relief prayed against it in the bill of complaint was to have the stock claimed transferred on the books; no prayer to restrain it from paying any further dividends, etc. The prayer for general relief must be construed in connection with the prayer for special relief, and the case made by the bill of complaint. The whole frame of the bill and its allegations treated the defendant railway company as having no interest in the controversy between the parties as to the ownership of its stock. The stock had been issued and delivered in payment for the properties conveyed to it, and there its interest terminated. It set up in its answer that it had no interest in the controversy, and alleged its readiness to perform any decree of the court to effectuate a transfer of said stock. This view seems to have been accepted by the parties to this suit up to the making of the final decree herein, as is clearly shown by the preamble, as it were, to the answer of the corporation found on page 105 of the record filed in this court. The corporation was a proper and necessary party to effectuate the transfer of the stock on its books, should that be decreed, and it was this fact that gave the court jurisdiction of this case, and was made a party defendant for that purpose, and that alone, as shown by the allegations of the bill of complaint and the prayer. Under such circumstances the prayer for general relief has never been, so far as our investigation has gone, construed to warrant a money decree, as was entered in this case.

[4] This court cannot agree with the District Court in that part of the decree seeking to declare a lien on stock of the appellants, Parsons & Edwards, other than the particular shares claimed by the complainants. The special prayers of the bill have heretofore been set out, as well as the general frame of the bill. There are no allegations of fact contained in said bill upon which any such relief could be predicated, even if the complainants would be entitled to such relief,

and this point we do not decide. And there being no special prayer, and the allegations of the bill making no case for it, the prayer for general relief cannot aid it.

We wish to observe that in our opinion the complainants have not made a case, either by their bill or proofs, that appeals to the conscience of the chancellor. The claim is based upon an agreement not to interpose objections to a foreclosure proceeding, which objections could not have been meritorious. The bonds seeking payment under the deed of trust sought to be foreclosed were a first lien on the property of the railroad. The guaranty of the bonds of the Macon & Birmingham road was junior to said lien, and the only effect of the opposition of the Macon & Birmingham committee was to delay sale, and this seemed to be recognized by the parties making the agreement. The result of the agreement, and the object of the parties to the agreement, was to buy off this opposition by giving the stock in question; and a court of equity and conscience might well leave the parties in the condition in which it finds them.

While the master found, and we think the proofs sustain such finding, that the plea of the statute of limitations was not sustained, yet the proofs show that the stock was delivered to Devries on June 9, 1895, and delivered to appellant on the 15th of the same month. This bill was not filed until May 31, 1900, and no excuse for such delay offered. In the meantime, according to the allegations in the bill, the value of the stock had increased from $30,000 to $100,000. This would seem to us such gross laches as, had it been properly pleaded, would have prevented a recovery in this case by the complainants.

It is our judgment that the decree of the District Court be reversed, and the cause remanded, with directions to overrule exceptions to the master's report and dismiss the cause, at the costs of the complainants in the original bill. The costs of this appeal to be taxed against the appellees.

(218 Fed. 60)

BOROUGH OF DU BOIS v. PANCOAST.

(Circuit Court of Appeals, Third Circuit. November 12, 1914.)

No. 1887.

1. MUNICIPAL CORPORATIONS (§ 817*)—TORTS—EVIDENCE OF NEGLIGENCE.

In an action against a municipal corporation to recover for an injury to plaintiff, caused by the giving way of the anchorage of a banner which had been stretched across a street by third persons, the doctrine of res ipsa loquitur cannot be invoked as against the defendant.

[Ed. Note.—For other cases, see Municipal Corporations, Cent. Dig. § 1725; Dec. Dig. § 817.*]

2. MUNICIPAL CORPORATIONS (§ 819*)—ACTION FOR INJURY TO PERSON ON STREET—SUFFICIENCY OF EVIDENCE.

When plaintiff was passing along a street in defendant borough on a day when there was an unusually strong wind, a chimney on a four-story building, to which the end of a cable, from which a political banner was hung over the street, was attached, fell, and plaintiff was injured by falling bricks. The banner was erected by third persons, and

*For other cases see same topic & § NUMBER in Dec. & Am. Digs. 1907 to date, & Rep'r Indexes

there was no evidence that defendant or its officers had any knowledge of the manner in which the cable was anchored, and it could not be seen from the street. *Held* that, in the absence of any local regulation prohibiting it, the banner was a lawful structure, and defendant was not liable because it did not make an inspection to determine the security of the fastenings.

[Ed. Note.—For other cases, see Municipal Corporations, Cent. Dig. §§ 1739–1743; Dec. Dig. § 819.*]

8. MUNICIPAL CORPORATIONS (§ 788*)—DEFECTS OR OBSTRUCTIONS IN STREETS —DUTY OF INSPECTION.

A municipality is not required to look for defects or dangers in its streets, but the measure of its duty is only to observe such as a reasonable supervision would disclose.

[Ed. Note.—For other cases, see Municipal Corporations, Cent. Dig. §§ 1641–1643, 1646, 1652; Dec. Dig. § 788.*]

In Error to the District Court of the United States for the Western District of Pennsylvania; William H. Hunt, Judge.

Action at law by Vernon W. Pancoast against the Borough of Du Bois. Judgment for plaintiff, and defendant brings error. Reversed.

H. Fred Mercer, of Pittsburgh, Pa., for plaintiff in error.

A. L. Cole, of Clearfield, Pa., for defendant in error.

Before BUFFINGTON, McPHERSON, and WOOLLEY, Circuit Judges.

J. B. McPHERSON, Circuit Judge. Federal jurisdiction over this controversy depends wholly on diverse citizenship, and the writ of error raises the question whether the plaintiff was a citizen of New York or of Pennsylvania when the suit was brought. The point was distinctly made at the trial and is raised by one of the assignments, although indeed we would be bound to take notice of it on our own motion. Neel v. Penna. Co., 157 U. S. 153, 15 Sup. Ct. 589, 39 L. Ed. 654; Newcomb v. Burbank (C. C. A. 2d Cir.) 181 Fed. 334, 104 C. C. A. 164; Taylor v. Weir (C. C. A. 3d Cir.) 171 Fed. 636, 96 C. C. A. 438. As the case must go back for other reasons, we need say no more than this: If another trial should take place, and if the evidence then should be substantially the same as the evidence now before us, the question of the plaintiff's citizenship ought to be submitted to a jury with appropriate instructions.

Turning to the merits, we may say at once that in our opinion a binding instruction should have been given in favor of the borough. The evidence tended to prove the following facts:

In October, 1912, a banner of a political party was stretched across one of the principal streets in the borough of Du Bois. One end of the supporting cable was fastened to a chimney that extended above the roof of the Commercial Hotel, a four-story brick building abutting on the street. The plaintiff's case against the borough is thus set forth in the statement of claim:

"That it was under the law [the] duty of said defendant to keep said street in a safe condition, so that persons might pass and repass thereon without danger to life or limb and without harm or hindrance.

*For other cases see same topic & § NUMBER in Dec. & Am. Digs. 1907 to date, & Rep'r Indexes

"That, notwithstanding the duty of said defendant borough, on the said 12th day of October, 1912, the said defendant permitted said street to become and be in a dangerous condition, and permitted a structure in the form of a large structural banner, composed of ropes, cloth, and painting, to be put up and erected over said street, and to be fastened to an insecure fastening in the shape of a brick chimney that stood on the wall of the Commercial Hotel, which fastening was insecure and unsafe and dangerous, and that when said plaintiff was passing along said street, and under said banner, the same fell and the bricks from said chimney were scattered upon said public street or highway, and about and upon said plaintiff," etc.—thus doing the injury complained of.

The banner—which was of considerable size, was made of rope mesh, and carried a portrait on cloth of one of the candidates for president—had been stretched across the street only a few days before October 12th. It was suspended from a wire rope or cable, and one end of the cable was fastened to the chimney in question. The chimney was an extension of the hotel wall, and was about 21 inches square and probably from 3 to 4 feet in height. The roof of the building was nearly flat, and a cornice extended beyond the chimney about 3 feet, overhanging the sidewalk to this extent. Two turns were taken about the base of the chimney, and a loop was formed by clamping the end to the body of the cable. Witnesses testified that on the day in question the weather was "very stormy," and described the wind as "pretty strong" and as "unusual." Whatever may have been the cause of the accident, the chimney broke about 6 or 8 inches above the roof, and the loop probably slipped upward off the chimney, thus letting the banner down. The plaintiff was injured, not by the banner, but by one or more of the falling bricks.

The evidence did not disclose by whose direction the banner was put up. The actual work appears to have been done by employés of the electric company. A short time before the accident the burgess and the chief of police, in passing along the street, saw the banner in place; but they could not see where or how the cable was fastened. The borough did not give permission to erect the banner, but (so far as the evidence showed) the erection of similar objects was not forbidden, either by ordinance or other regulation. No official of the borough inspected the fastening around the chimney. The cable did not break, and the loop did not pull out of the clamp.

In this condition of the evidence, we think the plaintiff was not entitled to recover. We may first observe that the erection of the banner was not in itself unlawful. The practice is common throughout the country, and we are not acquainted with any general rule of law that forbids it. Thousands of banners and flags are displayed over public highways—many from heavy projecting poles—not only in every political campaign, but also on many anniversaries and holidays, and (if it be assumed that a municipality has the power to forbid the use of the streets for this purpose) the custom is not unlawful where no such prohibition exists. But, of course, if the use of the streets by vehicles or pedestrians is rendered unsafe by the carelessness of those who put or maintain these objects in place, they will be liable as in other cases of negligence. But the primary liability is upon them, and

not upon the municipality, and they are liable, not simply because they have erected a banner or a flag, but because they have been guilty of some negligence in so doing that has resulted in the injury complained of. The liability of the municipality, where it exists at all, is secondary; or perhaps it is more accurate to say the liability rests upon a different kind of negligence, the neglect of a different duty.

[1] But, no matter upon whom a person injured seeks to fasten liability—whether upon the person erecting the banner, or upon the municipality—in either event he must prove negligence in putting up the structure, or in maintaining or in taking care of it afterwards. There is no presumption of such negligence where the suit is against the municipality, and in the case before us we may further observe that there was no evidence of negligence, either in putting up or in taking care of the banner, unless negligence should be inferred from the happening of the accident itself. The question was submitted whether the act of God, the high wind, was the efficient cause of the accident; but otherwise the charge assumed that the fall of the bricks was due to some one's negligence, and this could not have been assumed, except by a conscious or unconscious application of the doctrine of res ipsa loquitur. Now, whether that doctrine would have been applicable or inapplicable, if the suit had been against the person who was primarily liable for the erection, it was improperly applied in this action. As the borough took no part, direct or indirect, in putting the banner up, and did not have the custody of it afterwards, it is plain that liability in this suit can only be supported upon proof that the borough had actual or constructive notice of a dangerous structure over a public street, and failed to take the proper steps thereafter. If, therefore, the structure was not dangerous, the borough owed no duty, and for this reason the plaintiff was bound to offer affirmative evidence of danger. The only danger asserted was the use of the chimney as an anchorage for the cable, and we have already said that no affirmative evidence was offered that there was negligence in using the chimney for this purpose. No witness testified concerning the weight of the banner or of the cable, or concerning the strength of the chimney, or concerning its patent or latent defects, if any such existed; but the charge of the court assumes, not only that the chimney was insufficient, but that there was negligence in selecting it as an anchorage for the cable, evidently basing the assumption upon the single fact that the accident happened, in spite of the instruction that negligence was not to be presumed from the happening of the accident itself. This can only refer to the negligence of the borough, for there is a necessary assumption that the accident was due primarily to the negligence of some one else, and, as we have said, the doctrine of res ipsa loquitur could not be properly applied in this action.

[2] But, if we accept the assumption that there was negligence in anchoring the cable to the chimney, the question still remains: What was the borough's duty under the circumstances? If we sustained the argument for the plaintiff, we should be obliged to assent to the proposition that whenever a municipality has notice that a banner or a flag overhangs a public street its supports must be immediately inspected, under penalty of liability if they should be insecure and if injury to

a passer-by should result therefrom. The jury received no instruction on this subject, except the brief submission, whether—

"the borough ought reasonably to have exercised inspection and supervision with respect to that banner and the fastenings of it as they evisted at the time that Mr. Pancoast was injured."

[3] Now there was nothing whatever to call the borough's attention to any defects in the anchorage of the banner. The anchorage itself could not be seen from the street, and, unless the mere presence of the banner raised an immediate duty of inspection, there was no evidence to support the assertion that such a duty had been violated. The plaintiff's position is extreme, and we find no authority to support it. Indeed, such a burden could not be borne; if the supports of the numerous banners and flags that are lawfully displayed many times a year must be presumed to be unsafe and to require immediate examination, the task of inspection could not possibly be performed. The unreasonableness of such a rule is a legitimate argument against its existence; but there is ample authority against it to be found in the decisions on the general subject of a municipality's duty in regard to defects or dangers in its highways. An elaborate collection of cases will be found in a note to Elam v. Sterling, 20 L. R. A. (N. S.) 725. In Pennsylvania numerous cases decide that a municipality is not liable for a defect in the highway arising without its fault or negligence, unless it has express notice, or the defect be so notorious as to be evident to passers-by. A municipality is not obliged to look for defects, the measure of its duty being merely to observe such as a reasonable supervision might disclose. Lohr v. Philipsburg, 165 Pa. 109, 30 Atl. 822; Burns v. Bradford, 137 Pa. 361, 20 Atl. 997, 11 L. R. A. 726; Kost v. Ashland, 236 Pa. 164, 84 Atl. 691; Yeager v. Berwick, 218 Pa. 265, 67 Atl. 347; Dalton v. Towanda, 215 Pa. 402, 64 Atl. 547; Duncan v. Philadelphia, 173 Pa. 550, 34 Atl. 235, 51 Am. St. Rep. 780; Rapho v. Moore, 68 Pa. 404, 8 Am. Rep. 202.

Without prolonging the discussion, we are of opinion that upon the evidence contained in this record the jury ought to have been directed to find for the defendant.

The judgment is reversed, and a new venire is awarded.

(218 Fed. 64)

CHUNG KIN TOW v. FLYNN.

(Circuit Court of Appeals, First Circuit. November 19, 1914.)

No. 1088.

1. HABEAS CORPUS (§ 92*)—SCOPE OF REVIEW—GOVERNOR'S WARRANT—PRIMA FACIE EVIDENCE.

On review of extradition proceedings by a petition for habeas corpus, the warrant of the Governor of the asylum state is prima facie evidence that all necessary legal prerequisites have been complied with; and if the proceedings before and by the Governor so appear to be regular, it is

*For other cases see same topic & § NUMBER in Dec. & Am. Digs. 1907 to date, & Rep'r Indexes

evidence of the right to remove the prisoner to the state from which he fled.

[Ed. Note.—For other cases, see Habeas Corpus, Cent. Dig. §§ 81, 83, 87-96; Dec. Dig. § 92.*

Scope of review on habeas corpus to procure release of person sought to be extradited, see note to Bruce v. Rayner, 62 C. C. A. 506.]

2. HABEAS CORPUS (§ 92*)—PROCEEDINGS—ACTION OF GOVERNOR—CONCLUSIVENESS.

Where it appeared that the Governor of the asylum state in extradition proceedings acted, not only on the report of his Attorney General, which by the statutes of his state he was entitled to require, but also on the extradition papers from the demanding state, the reference to the report of the Attorney General was ineffective, since, while the Governor was entitled to demand the Attorney General's report, he was under no obligation to rely exclusively on it.

[Ed. Note.—For other cases, see Habeas Corpus, Cent. Dig. §§ 81, 83, 87-96; Dec. Dig. § 92.*]

3. EXTRADITION (§ 34*)—AFFIDAVITS—AUTHENTICATION BY GOVERNOR—CONCLUSIVENESS.

Where affidavits forming a part of the papers in an extradition proceeding were sworn to before the clerk of an inferior court in the demanding state, but the Governor of that state authenticated the affidavits, they were sufficiently authenticated for all the purposes of extradition.

[Ed. Note.—For other cases, see Extradition, Cent. Dig. §§ 35-38; Dec. Dig. § 34.*]

Appeal from the District Court of the United States for the District of Massachusetts; James M. Morton, Jr., Judge.

Habeas corpus by Chung Kin Tow against Frederick F. Flynn to obtain petitioner's release from an extradition warrant issued by the Governor of Massachusetts, directing petitioner's removal to the state of Illinois to answer a complaint charging him with murder. From a decree denying the writ, petitioner appeals. Affirmed.

Herbert Parker, of Boston, Mass. (Thomas J. Barry and Herbert F. Callahan, both of Boston, Mass., on the brief), for appellant.

Leon R. Eyges, of Boston, Mass. (Thomas J. Boynton, of Boston, Mass., on the brief), for appellee.

Before PUTNAM, DODGE, and BINGHAM, Circuit Judges.

PUTNAM, Circuit Judge. This is an appeal from the decree of the United States District Court, denying a writ of habeas corpus, applied for by Tow, against a warrant of the Governor of Massachusetts directing the removal of the appellant to answer a complaint charging murder, pending in the county of Cook and state of Illinois. The observations of the counsel for the appellant are wholesome and carefully expressed, but they are mainly of a general character. There are few propositions requiring our attention.

The proceedings before the Governor of Massachusetts were very protracted. It is apparent that the principal question was one of the identity of the appellant, who now appears under the name of Chung Kin Tow. The requisition of the Governor of Illinois was for Harry Eng Hong. The common controversy which so often puzzles the courts

*For other cases see same topic & § NUMBER in Dec. & Am. Digs. 1907 to date, & Rep'r Indexes

with reference to the identity of Chinamen was, in some of the stages before the Governor of Massachusetts, troublesome; but it is now all out of the way by the appellant's admission.

[1] Also it is now admitted as follows:

"The appellant concedes, upon review by petition for habeas corpus, that the warrant of the Governor is prima facie evidence that all necessary legal prerequisites have been complied with, and, if the proceedings before and by the Governor so appear to be regular, it is conclusive evidence of the right to remove the prisoner to the state wherefrom he has fled."

This is a proper and wholesome admission, which is in accordance with the practice in extradition cases. Indeed, the proceedings upon extradition cases are summary, and, for the most part, very simple, and extensive conflicts with reference thereto should cease. As in this case the warrant of the Governor of Massachusetts shows on its face that all the necessary legal prerequisites have been complied with, as stated in the admission, this is conclusive, as further stated in the admission, unless the proceedings before the Governor appear not to have been regular.

[2] This attempted reservation probably has reference to the claim that the Governor of Massachusetts acted on the extradition papers from the demanding state, and on a report made by the Attorney General of Massachusetts. If it had appeared that the Governor of Massachusetts acted only on the report of the Attorney General, this might have required us to investigate what was, in fact, reported by the Attorney General; but, as it is admitted that the Governor of Massachusetts also had acted on the extradition papers from the demanding state, this reference to the report of the Attorney General of Massachusetts is ineffective. The Governor had the right, of course, to demand the opinion of the Attorney General of Massachusetts, but he was under no obligation to rely exclusively on that report; and also the proceedings which accompanied the papers from the demanding state were unusually voluminous, and covered every point in the case.

It is true that the petitioner, appellant, cites to us the Revised Laws of Massachusetts, c. 217, § 11, to the effect that the requisition should be "accompanied by affidavits to the facts constituting the crime charged by persons who have actual knowledge thereof"; and in this connection the petitioner alleges that the facts averred in the requisition record "would only prima facie constitute the crime of an assault, or, at the most, manslaughter," and fail to set out the facts indicating malice and premeditation. However, even if this provision of the Massachusetts statute is effectual, the requisition record alleges sufficient, in connection with the common-law presumption that certain facts, unexplained, constitute murder, to meet the demands of this statute, in view, particularly, of the fact that extradition looks always to summary proceedings, and not to technical details or strict rules of criminal practice or pleading, as is stated in Munsey v. Clough, 196 U. S. 364, 372, 25 Sup. Ct. 282, 49 L. Ed. 515.

[3] A criticism is made that the affidavits were taken before a clerk of some inferior court of the state of Illinois, but that his authority to attest them is not shown. It is not necessary for us to examine the laws of the state of Illinois as to the authority of the clerk in question

to take the affidavits to which we refer, because the Governor of Massachusetts in his warrant has certified that the Governor of Illinois has authenticated the affidavits, so that they are sufficiently authenticated for all the purposes of extradition. It has been always held, with reference to authentications required by the statutes of the United States, that the authentications by the respective Governors are sufficient. Moore on Extradition, vol. 2, §§ 558 to 561, and especially Kingsbury's Case, 106 Mass. 223, 226. The rule which reaches authentications to whatever is especially required by the statute is broad enough, according to principal and practice, to reach all authentications made use of in extradition. According to the late advances by the Supreme Court towards simplifications in matters of extradition, when we have the authentications of the Governors, we are not required to look into the intricacies of local legislation.

The decree of the District Court is affirmed, and the appellee recovers his costs of appeal.

MEMORANDUM DECISIONS

(218 Fed. 987)

BOWRON v. SIBERT. (Circuit Court of Appeals, Fifth Circuit. October 30, 1914.) No. 2668. Appeal from the District Court of the United States for the Northern District of Alabama; W. I. Grubb, Judge. Suit in equity by J. Carl Sibert against James Bowron, as trustee in bankruptcy of the Southern Iron & Steel Company. Decree for complainant, and defendant appeals. Affirmed. Augustus Benners, of Birmingham, Ala., for appellant. Amos E. Goodhue and A. R. Brindley, both of Gadsden, Ala., for appellee. Before WALKER, Circuit Judge, and CALL and CLAYTON, District Judges.

PER CURIAM. A question is raised by the counsel for the appellee as to the scope of the review of the proceedings of the trial court which it is permissible to make under the appeal by which the case is brought into this court. A determination of that question is not necessary. The result is the same, whether the scope of the review is restricted, as claimed by the counsel for the appellee, or is broad enough to present the questions discussed by the counsel for the appellant. Assuming that those questions are presented for review, yet the result of an examination of the record is that we reach the conclusion that it does not disclose any ground for a reversal of the judgment. We do not concur in the view, urged by the counsel for the appellant, that the evidence adduced failed to support either count of the complaint. Affirmed.

(218 Fed. 987)

BRAY et al. v. UNITED STATES FIDELITY & GUARANTY CO. (two cases). In re EVANSVILLE CONTRACT CO. (Circuit Court of Appeals, Fourth Circuit. December 7, 1914.) Nos. 1246, 1260. Appeal from and Petition to Superintend and Revise, in Matter of Law, Proceedings of the District Court of the United States for the Northern District of West Virginia, at Parkersburg, in Bankruptcy; Alston G. Dayton, Judge. In the matter of bankruptcy proceedings of the Evansville Contract Company. On petition by M. J. Bray and others to superintend and revise in matter of law certain proceedings resulting in a decree affirming a referee's order in favor of the United States Fidelity & Guaranty Company, with separate appeal by Bray and

others from the same decree. Petition dismissed, and decree affirmed. H. P. Camden, of Parkersburg, W. Va., for petitioners and appellants. B. M. Ambler, of Parkersburg, W. Va. (W. W. Van Winkle and Mason G. Ambler, both of Parkersburg, W. Va., on the brief), for respondent and appellee. Before KNAPP and WOODS, Circuit Judges, and McDOWELL, District Judge.

PER CURIAM. We are satisfied that the court below was correct in confirming the report and order of the referee and dismissing the petitions for review, and deem it unnecessary to repeat the argument in support of these conclusions. In our opinion the petition to superintend and revise should be dismissed, at the cost of petitioners, and the decree of the trial court appealed from affirmed, at the cost of the appellants; and it is so ordered.

(218 Fed. 987)

DIETER-WENZEL CONST. CO. v. EPPLER. (Circuit Court of Appeals, Fifth Circuit. December 9, 1914.) No. 2660. In Error to the District Court of the United States for the Western District of Texas; Thomas S. Maxey, Judge. Victor Lee Brooks, of Austin, Tex., and Thad B. Landon, of Kansas City, Mo., for plaintiff in error. S. W. Fisher and Chas. L. Black, both of Austin, Tex., for defendant in error. Before PARDEE and WALKER, Circuit Judges, and CALL, District Judge.

PER CURIAM. None of the assignments of error on this writ are well taken. See City of Key West v. Baer, 66 Fed. 443, 13 C. C. A. 572; Adams v. New York Life Ins. Co., 113 Fed. 303, 51 C. C. A. 263; Martinton v. Fairbanks, 112 U. S. 670, 5 Sup. Ct. 321, 28 L. Ed. 862; Lehnen v. Dickson, 148 U. S. 71, 13 Sup. Ct. 481, 37 L. Ed. 373; Dooley v. Pease, 180 U. S. 126-131, 21 Sup. Ct. 329, 45 L. Ed. 457; Wilson v. Merchants' Loan & Trust Co., 183 U. S. 121, 127 et seq., 22 Sup. Ct. 55, 46 L. Ed. 113; and also Alpha Portland Cement Co. v. Curzi, 211 Fed. 580-587, 128 C. C. A. 180, and cases there cited. Judgment affirmed.

(218 Fed. 988)

FIRST NAT. BANK OF WATSEKA, ILL., v. BARKLEY et al. (Circuit Court of Appeals, Fifth Circuit. November 30, 1914.) No. 2584. Appeal from the District Court of the United States for the Northern District of Texas; Edward R. Meek, Judge. William J. Berne, of Ft. Worth, Tex., for appellant. J. C. Terrell, Jr., of Ft. Worth, Tex., for appellees. Before PARDEE and WALKER, Circuit Judges, and CALL, District Judge.

PER CURIAM. The proper decision of this case turns upon the evidence, which is conflicting on the main issues, but we find that the preponderance is with the appellees. Affirmed.

(218 Fed. 988)

GROOM v. BARRETT.† (Circuit Court of Appeals, Fifth Circuit. November 30, 1914.) No. 2591. In Error to the District Court of the United States for the Northern District of Texas; Edward R. Meek, Judge. S. H. Madden and W. H. Kimbrough, both of Amarillo, Tex., David W. Armstrong, of New York City, and H. E. Hoover, of Canadian, Tex., for plaintiff in error. Sam J. Hunter and Ray Hunter, both of Ft. Worth, Tex., for defendant in error. Before PARDEE and WALKER, Circuit Judges, and CALL, District Judge.

PER CURIAM. At a former term a branch of this case was before this court (see Groom v. Mortimer Land Co. et al., 192 Fed. 849, 113 C. C. A. 173), in which nearly all the vital questions presented in this suit were involved and passed upon adversely to the pretensions of the plaintiff in error herein, and as then decided have been followed by the District Court in the present suit. We have considered the assignments of error, and find no reversible error assigned or patent on the record. We notice and have considered the

† Rehearing denied January 4, 1915.

motion for assessment of damages under the second paragraph of our rule 30, to the effect that where it shall appear that a writ of error has been sued out merely for delay, and has delayed proceedings on the judgment in the inferior court, damages at a rate not exceeding 10 per cent. in addition to interest shall be awarded upon the amount of the judgment, and we are not prepared to hold that the writ of error in this case was sued out for delay. Affirmed, with costs.

(218 Fed. 988)

KRUEGEL et al. v. STANDARD SAVINGS & LOAN ASS'N et al.† (Circuit Court of Appeals, Fifth Circuit. January 20, 1915.) No. 2714. Appeal from the District Court of the United States for the Northern District of Texas; Edward R. Meek, Judge. Suit by Herman Kruegel and others against the Standard Savings & Loan Association and others. Decree for defendants, and plaintiffs appeal. Modified and affirmed. Herman Kruegel, of Dallas, Tex., for appellants. Leroy A. Smith and R. W. Flournoy, both of Ft. Worth, Tex., for appellees. Before PARDEE and WALKER, Circuit Judges, and SHEPPARD, District Judge.

PER CURIAM. An examination of the record in this case has led us to the conclusion that there was no error in the decree appealed from. In the argument of the case it was made known to the court that the appellees did not object to the appellants having further time to redeem the land described in the judgment of the District Court, the execution of which the bill in the case sought to have perpetually enjoined. Treating that suggestion as a consent by the appellees to the modification of the decree appealed from, that decree is modified, by allowing appellants 60 days from this date to make the payments which the decree appealed from provided should have the effect of preventing the issuance of the execution ordered to be issued if such payments should not be made within the time allowed therefor by the decree. Except as thus modified, the decree appealed from is affirmed, all costs to be taxed against the appellants, and to be paid within the time herein allowed as a condition to a withholding of the issuance of the writ of execution.

(218 Fed. 989)

MEDLIN MILLING CO. v. HALL-BAKER GRAIN CO. (Circuit Court of Appeals, Fifth Circuit. December 4, 1914.) No. 2655. Appeal from the District Court of the United States for the Northern District of Texas; Edward R. Meek, Judge. George Thompson and David T. Bomar, both of Ft. Worth, Tex., for appellant. S. B. Cantey, of Ft. Worth, Tex., for appellee. Before PARDEE and WALKER, Circuit Judges, and CALL, District Judge.

PER CURIAM. From an examination of the record and evidence, we are satisfied that this case was correctly decided in the District Court, and the decree appealed from is accordingly affirmed.

(218 Fed. 989)

MEDLIN MILLING CO. v. J. ROSENBAUM GRAIN CO. (Circuit Court of Appeals, Fifth Circuit. December 4, 1914.) No. 2656. Appeal from the District Court of the United States for the Northern District of Texas; Edward R. Meek, Judge. George Thompson and David T. Bomar, both of Ft. Worth, Tex., for appellant. S. B. Cantey, of Ft. Worth, Tex., for appellee. Before PARDEE and WALKER, Circuit Judges, and CALL, District Judge.

PER CURIAM. From an examination of the record and evidence, we are satisfied that this case was correctly decided in the District Court, and the decree appealed from is accordingly affirmed.

† Rehearing denied February 22, 1915.

(218 Fed. 989)

NATIONAL SURETY CO. v. CHRISTOPHER & SIMPSON ARCHITECTURAL IRON & FOUNDRY CO., Inc., et al. (Circuit Court of Appeals, Fifth Circuit. December 2, 1914.) No. 2633. Appeal from the District Court of the United States for the Northern District of Texas; Edward R. Meek, Judge. Henry E. Jackson, of San Angelo, Tex., for appellant. Frances Marion Etheridge, Joseph Manson McCormick, Henri Louis Bromberg, and Wendel Spence, all of Dallas, Tex., and S. B. Cantey and W. T. Bartholomew, both of Ft. Worth, Tex., for appellees. Before PARDEE and WALKER, Circuit Judges, and CALL, District Judge.

PER CURIAM. The decree appealed from appears to be in accordance with the preponderance of evidence and equity in the case, and it is therefore affirmed.

(218 Fed. 989)

READ MACH. CO. v. JABURG et al. (Circuit Court of Appeals, Second Circuit. November 10, 1914.) No. 74. Appeal from the District Court of the United States for the Southern District of New York. This cause comes here upon appeal from a decree of the District Court, Southern District of New York, holding a patent valid and infringed as to claims 6 and 10 thereof. The patent is No. 966,765 issued August 11, 1910, to Harry Read, for a mixing machine. The opinion of the District Court is reported in 212 Fed. 951. J. Edgar Bull and A. G. N. Vermilya, both of New York City, for appellants. Edmund Wetmore and O. W. Jeffery, both of New York City, for appellee. Before LACOMBE, COXE, and WARD, Circuit Judges.

PER CURIAM. Judge Hunt has very fully discussed the issues presented, and, as we concur in his reasoning and conclusions, it is unnecessary to write another opinion. Decree affirmed, with costs.

(218 Fed. 989)

ROBERTSON et al. v. AYLOR. (Circuit Court of Appeals, Fifth Circuit. December 3, 1914.) No. 2632. In Error to the District Court of the United States for the Northern District of Texas; Edward R. Meek, Judge. Ocie Speer, I. W. Stephens, and George E. Miller, all of Ft. Worth, Tex., and E. J. Hamner, of Sweetwater, Tex., for plaintiffs in error. A. H. Kirby and Theodore Mack, both of Ft. Worth, Tex., for defendant in error. Before PARDEE and WALKER, Circuit Judges, and CALL, District Judge.

PER CURIAM. We find none of the assignments of error well taken. The judgment of the District Court is affirmed.

(218 Fed. 990)

ROLLER v. BURKETT et al.† (Circuit Court of Appeals, Fifth Circuit. November 30, 1914.) No. 2590. Appeal from the District Court of the United States for the Eastern District of Texas; Gordon E. Russell, Judge. Thomas J. Gibson, of Mexia, Tex., and John E. Roller, of Harrisonburg, Va., for appellant. Chas. S. Todd, of Texarkana, Tex., and A. D. Preston, of Beckley, W. Va., for appellees. Before PARDEE and WALKER, Circuit Judges, and CALL, District Judge.

PER CURIAM. This case, submitted on a motion to dismiss the appeal and on the merits, having been carefully considered, we conclude that, while there may be some question as to whether the appeal was taken or sued out within the time fixed by the statute, there is no doubt that on the merits of the case the decree of the District Court was correct, and should be affirmed; and it is so ordered.

† Rehearing denied January 5, 1915.

(218 Fed. 990)

TEXAS & P. RY. CO. v. BIGGER et al. (Circuit Court of Appeals, Fifth Circuit. December 9, 1914. Rehearing Denied January 5, 1915.) No. 2648. In Error to the District Court of the United States for the Western District of Texas; Thomas S. Maxey, Judge. T. D. Cobbs, of San Antonio, Tex., for plaintiff in error. H. C. Carter, P. J. Lewis, Ernest Fellbaum, and Claud J. Carter, all of San Antonio, Tex., for defendants in error. Before PARDEE and WALKER, Circuit Judges, and CALL, District Judge.

PER CURIAM. We find none of the assignments of error in this case well taken. With regard to excessive damages, see Alpha Portland Cement Co. v. Curzi, 211 Fed. 580–587, 128 C. C. A. 180, and cases there cited. The judgment of the District Court is affirmed.

(218 Fed. 990)

TEXAS & P. RY. CO. v. HARTFORD FIRE INS. CO. et al.† (Circuit Court of Appeals, Fifth Circuit. January 6, 1915.) No. 2678. In Error to the District Court of the United States for the Eastern District of Texas; Gordon Russell, Judge. Action by the Hartford Fire Insurance Company and another against the Texas & Pacific Railway Company. Judgment for plaintiffs, and defendant brings error. Affirmed. F. H. Prendergast, of Marshall, Tex., for plaintiff in error. S. P. Jones, of Marshall, Tex. (William Thompson, of Dallas, Tex., on the brief), for defendants in error. Before PARDEE and WALKER, Circuit Judges, and CALL, District Judge.

PER CURIAM. We think it follows, from the decision in the companion case of Texas & Pacific Railway Co. v. Rosborough, Home Insurance Company, North British & Mercantile Company, et al. (December 14, 1914) 235 U. S. 429, 35 Sup. Ct. 117, 59 L. Ed. —, that there was no reversible error in the rulings in this case which are urged as grounds for a reversal, and that the judgment should be affirmed; and it is so ordered.

(218 Fed. 990)

THE TITANIC. (Circuit Court of Appeals, Second Circuit. October 30, 1914.) Motion for writ of mandamus to the District Court of the United States for the Southern District of New York. Before LACOMBE, COXE, and WARD, Circuit Judges.

PER CURIAM. An injunction in limited liability proceedings is not a matter of discretion of the District Court, but a matter of statutory right. If the form of the injunction issued does not conform to the intention of Congress, any one aggrieved may insist upon its being made to do so. Our previous modification of this particular injunction concerned only death claimants. We gave them the privilege of beginning actions within one year from the death, so as to preserve the cause of action created by Lord Campbell's Act in the event that the proceedings to limit liability were dismissed after that period had expired. In re Oceanic Steam Nav. Co., 204 Fed. 260, 124 C. C. A. 352. The District Judge, in declining to dispose of the motion to alter the form of the injunction in this case, seems to have been influenced both by a sense of propriety and by a doubt of power. There is nothing in what we have heretofore said to prevent him from controlling the injunction in any other particular than the one we decided. We leave the motion to be disposed of by him, without issuing any peremptory mandamus.

(218 Fed. 991)

TOMLINSON et al. v. BOURN. (Circuit Court of Appeals, Fifth Circuit. December 3, 1914.) No. 2686. Appeal from the District Court of the United States for the Northern District of Texas; Edward R. Meek, Judge. William J. Berne, of Ft. Worth, Tex., for appellants. John M. Wagstaff, of Abilene,

 † Rehearing granted April 20, 1915.

Tex., and James L. Shepherd, of Colorado, Tex., for appellee. Before PARDEE and WALKER, Circuit Judges, and CALL, District Judge.

PER CURIAM. We find no reversible error in the rulings of the court on the pleadings and admission of evidence, and the evidence adduced supports the decree rendered. Affirmed.

(218 Fed. 991)

UNITED STATES ex rel. and to Use of TEXAS PORTLAND CEMENT CO. et al. v. McCORD et al. (Circuit Court of Appeals, Fifth Circuit. November 30, 1914.) No. 2252. In Error to the District Court of the United States for the Northern District of Texas; Edward R. Meek, Judge. Frances Marion Etheridge, of Dallas, Tex., for plaintiffs in error. George A. Carden, Charles W. Starling, and W. C. Kimbrough, all of Dallas, Tex., for defendants in error. Before PARDEE, Circuit Judge, and MAXEY, District Judge.

PER CURIAM. Certain jurisdictional questions having been heretofore certified and submitted to the Supreme Court (see United States ex rel. Texas Portland Cement Co. v. McCord, 233 U. S. 157, 34 Sup. Ct. 550, 58 L. Ed. 893), and the same having been answered in the negative, it follows that the judgment of the Circuit Court was correct, and should be affirmed; and it is so ordered.

(218 Fed. 991)

VACUUM ENGINEERING CO. v. DUNN. (Circuit Court of Appeals, Second Circuit. November 9, 1914.) Appeal from the District Court of the United States for the Southern District of New York. Edwin J. Prindle and Arthur Wright, both of New York City, for appellant. L. F. H. Betts, of New York City, for appellee. Before LACOMBE, WARD, and ROGERS, Circuit Judges.

PER CURIAM. This is an application to recall the mandate (209 Fed. 219, 126 C. C. A. 313), to admit as part of the record certified copies of certain foreign patents, and to issue a new mandate thereon, similar to the one in the suit of Patents Selling Company against this same defendant ([D. C.] 204 Fed. 99), where the same patents were in like manner introduced. To do this will undoubtedly be equitable, and since there is no technical, nor indeed any other, objection made to the granting of the relief prayed for, the application is granted.

END OF CASES IN VOL. 133

INDEX-DIGEST

THIS IS A KEY-NUMBER INDEX

It Supplements the Decennial Digest, the Key-Number Series and Prior Reporter Volume Index-Digests

---

ACCORD AND SATISFACTION.

See Railroads, § 152.

ACCOUNT.

See Appeal and Error, § 1022; Bankruptcy, § 149; Executors and Administrators, §§ 473, 474–514; Trusts, § 231.

ADJOINING LANDOWNERS.

See Boundaries.

ADJUDICATION.

See Bankruptcy, §§ 100, 235.

ADMINISTRATION.

See Bankruptcy, §§ 149–345; Executors and Administrators; Insolvency, § 109.

ADMIRALTY.

See Collision; Seamen; Shipping; Wharves.

IX. APPEAL.

§ 118 (U.S.C.C.A.) When questions of fact are dependent on conflicting evidence, the decision of the judge, before whom the case was tried, will not be reversed, unless clearly against the evidence.—The Samson, 260.

§ 118 (U.S.C.C.A.) A finding of fact made by a court of admiralty on conflicting evidence is presumptively correct, and will not be reversed by the appellate court, unless the record clearly shows by the weight of the evidence that it is erroneous.—Louisiana Excursion Co. v. Gidionsen, 445.

§ 118 (U.S.C.C.A.) The decree of a court of admiralty, in a suit for personal injuries rendered on conflicting testimony taken in open court, will not be disturbed on appeal, unless there is a decided preponderance of evidence against it.—The Elenore, 447.

ADMISSIONS.

See Appeal and Error, § 970; Evidence, §§ 220, 253; Trial, § 60.

ADVERSE POSSESSION.

See Quieting Title, § 29.

I. NATURE AND REQUISITES.

(B) Actual Possession.

§ 14 (U.S.C.C.A.) No length of constructive possession will ripen a defective title into a valid one, but the possession for that purpose must be actual and continuous.—Parrish v. Foreman-Blades Lumber Co., 251.

Where there is no actual possession of land, the law carries the possession to the real owner.—Id.

(E) Duration and Continuity of Possession.

§ 44 (U.S.C.C.A.) Possession of land under color of title must be taken by the claimant himself, his servants or tenants, and by him or them continued for seven years together, and is not established by proof of a single entry on the land when an injunction was promptly secured against it.—Parrish v. Foreman-Blades Lumber Co., 251.

§ 53 (U.S.C.C.A.) Where the holder of a junior color of title takes actual possession but vacates before the statutory period expires, that instant the owner's constructive possession intervenes and the wrongdoer's adverse possession ends.—Parrish v. Foreman-Blades Lumber Co., 251.

II. OPERATION AND EFFECT.

(A) Extent of Possession.

§ 101 (U.S.C.C.A.) The holder of the older and better title has constructive possession, and the holder of the junior or inferior title that may overlap cannot hold adversely until he

has entered on the actual boundary claimed by the older title.—Parrish v. Foreman-Blades Lumber Co., 251.

III. PLEADING, EVIDENCE, TRIAL, AND REVIEW.

§ 112 (U.S.C.C.A.) Where a claimant by adverse possession fails in his proof as to any single element thereof, it is the court's duty to instruct the jury that adverse possession is not established.—Parrish v. Foreman-Blades Lumber Co., 25'

AFFIDAVITS.

See Extradition, § 34.

AGENCY.

See Principal and Agent.

ALIENS.

See Habeas Corpus, § 54.

II. EXCLUSION OR EXPULSION.

§ 32 (U.S.C.C.A.) Where immigration authorities, in determining the right of a Chinese person to enter, considered all the evidence, the fact that they did not give proper effect to his certificate, issued under Act May 6, 1882, § 6, as amended by Act July 5, 1884, did not entitle him to his release on habeas corpus.—United States v. Li Chiong, 31.

III. IMMIGRATION.

§ 46 (U.S.C.C.A.) Act Hawaii April 17, 1911, which authorizes the secretary of the territory, when satisfied that a person was born in the Hawaiian Islands, to issue to such person a certificate showing that fact, which shall be prima facie evidence thereof, cannot affect the laws of the United States in regard to the immigration of aliens.—Lee Leong v. United States, 34.

§ 46 (U.S.C.C.A.) The provisions of Immigration Act Feb. 20, 1907, respecting the admission and deportation of aliens, apply to an alien who, having remained in this country for more than three years after first entry, and having gone abroad, although for a temporary purpose, with the intention of returning, again seeks admittance to the United States.—United States v. Tsurukichi Nakao, 35; Same v. Tsuneso Kusano, 36.

ALLOTMENT.

See Indians, §§ 13, 18.

AMBIGUITY.

See Patents, §§ 101, 157.

APPEAL AND ERROR.

See Admiralty, § 118; Bankruptcy, §§ 439–455; Courts, § 405; Injunction, § 231.

IV. RIGHT OF REVIEW.

(A) Persons Entitled.

§ 148 (U.S.C.C.A.) One who is not a party to a record and judgment is not entitled to an appeal therefrom.—United States ex rel. State of Louisiana v. Boarman, 487.

V. PRESENTATION AND RESERVATION IN LOWER COURT OF GROUNDS OF REVIEW.

(C) Exceptions.

§ 272 (U.S.C.C.A.) The giving or refusal of instructions cannot be reviewed, unless exceptions thereto were taken in open court while the jury were at the bar.—Beatson Copper Co. v. Pedrin, 29.

§ 274 (U.S.C.C.A.) Where defendants many times excepted to the court's ruling excluding evidence of a warranty and a breach thereof, they were not precluded from a review of such question because of a failure to further except to the court's ruling directing a verdict for plaintiff.—Harris v. Marsh, 407.

VI. PARTIES.

§ 323 (U.S.C.C.A.) Separate appeal by complainant from judgment against it for damages from temporary injunction *held* not to be dismissed because of the failure of the surety against whom judgment was also rendered to join in the appeal; the judgment being separate and not joint.—Columbia River Packers' Ass'n v. McGowan, 190.

X. RECORD AND PROCEEDINGS NOT IN RECORD.

(A) Matters to be Shown by Record.

§ 501 (U.S.C.C.A.) The giving or refusal of instructions cannot be reviewed, unless the record shows that exceptions were taken in open court while the jury were at the bar.—Beatson Copper Co. v. Pedrin, 29.

(K) Questions Presented for Review.

§ 671 (U.S.C.C.A.) Under Rev. St. §§ 649, 700 (U. S. Comp. St. 1913, §§ 1587, 1668), where a civil case is tried to the court and a general finding made, a review is limited to such rulings as are presented by a bill of exceptions, which cannot be used to bring up the oral testimony.—Dunsmuir v. Scott, 194.

§ 695 (U. S. C. C. A.) On a question of fact an appellate court cannot have the entire record before it, where the trial court and jury made an inspection of the premises where an accident occurred.—Rebillard v. Minneapolis, St. P. & S. S. M. Ry. Co., 9.

XVI. REVIEW.

(A) Scope and Extent in General.

§ 842 (U.S.C.C.A.) Whether there is substantial evidence to sustain a finding in favor of a party is a question of law which in a trial to the jury may be presented by a request for a peremptory instruction, and an exception to the denial thereof, or in a trial to the court by a request for a special finding and exception to the denial thereof.—Dunsmuir v. Scott, 194.

(E) Presumptions.

§ 927 (U.S.C.C.A.) The appellate court, on review of the denial of a motion to direct a verdict, must take that view of the evidence most favorable to the party against whom the direc-

tion is asked.—Lake Shore Electric Ry. Co. v. Kurts, 521.

(F) Discretion of Lower Court.

§ 954 (U.S.C.C.A.) The trial court's ruling on an application for an interlocutory injunction will not be disturbed, where the rules of equity are not violated, in the absence of an abuse of discretion.—Magruder v. Belle Fourche Valley Water Users' Ass'n, 524.

§ 970 (U.S.C.C.A.) The admission of declarations of alleged conspirators before the conspiracy has been sufficiently proved being discretionary with the trial court, its rulings thereon will not ordinarily be disturbed.—Spencer v. Read, 360.

§ 977 (U.S.C.C.A.) The grant or refusal of a new trial in the sound discretion of the trial court, cannot be reversed on a writ of error.—Spokane & I. E. R. Co. v. Campbell, 370.

(G) Questions of Fact, Verdicts, and Findings.

§ 1011 (U.S.C.C.A.) Questions of fact determined on conflicting evidence in an action at law tried without a jury, are not reviewable in the federal courts.—Busch v. Stromberg-Carlson Telephone Mfg. Co., 244.

§ 1022 (U.S.C.C.A.) The findings of a master on an accounting before him, concurred in by the court, should not be disturbed by an appellate court unless clearly wrong.—Lovewell v. Schoolfield, 449.

(H) Harmless Error.

§ 1031 (U.S.C.C.A.) Error is presumably prejudicial.—Chicago, St. P., M. & O. Ry. Co. v. Kroloff, 377.

§ 1056 (U.S.C.C.A.) On an issue as to the sufficiency of assessment work in a mining claim controversy, plaintiff *held* not prejudiced by the admission of the opinion of a workman familiar with the work as to its value, though not a fully qualified expert.—Cache Creek Mining Co. v. Brahenberg, 234.

§ 1062 (U.S.C.C.A.) In an action for the death of a pedestrian from being struck by a train, a refusal to withdraw one of plaintiff's several charges of negligence *held* ground for reversal, where there was no substantial evidence to sustain such charge.—Chicago, St. P., M. & O. Ry. Co. v. Kroloff, 377.

§ 1064 (U.S.C.C.A.) In an action for injuries to a servant, an instruction with reference to a statement signed by plaintiff as to how the accident occurred *held* not misleading, to defendant's prejudice.—Eastern Oil & Rendering Co. v. Thompson, 198.

APPLIANCES.

See Master and Servant, §§ 111, 121.

ASSESSMENT.

See Taxation, § 390.

ASSIGNMENTS.

See Bankruptcy, §§ 149–345; Patents, § 202.

I. REQUISITES AND VALIDITY.

(A) Property, Estates, and Rights Assignable.

§ 18 (U.S.C.C.A.) An underwriting is assignable.—Busch v. Stromberg-Carlson Telephone Mfg. Co., 244.

ASSIGNMENTS FOR BENEFIT OF CREDITORS.

See Bankruptcy; Insolvency.

ASSUMPSIT, ACTION OF.

See Mines and Minerals, § 70.

ASSUMPTION.

Of risks, see Master and Servant, § 219.

ATTORNEY AND CLIENT.

See Executors and Administrators, § 494; Insolvency, §§ 185, 188.

AUTHORITY.

See Principal and Agent, § 108.

AUTOMOBILES.

See Municipal Corporations, § 705; Negligence, § 93.

BAILMENT.

See Shipping, § 53.

BANKRUPTCY.

See Evidence, § 575; Insolvency; Mechanics' Liens, § 106.

II. PETITION, ADJUDICATION, WARRANT, AND CUSTODY OF PROPERTY.

(A) Jurisdiction and Course of Procedure in General.

§ 20 (U.S.C.C.A.) A creditors' suit, looking to the liquidation of the affairs of a corporation, instituted more than six months prior to a voluntary bankruptcy proceeding by the corporation, is not necessarily affected by such proceeding.—Yaryan Naval Stores Co. v. B. Borchardt Co., 488.

§ 22 (U.S.C.C.A.) General equity rules may be looked to for analogies in the performance of the administrative work of the courts of bankruptcy, but cannot be applied in such courts as rules of court.—International Harvester Co. of America v. Carlson, 430.

§ 36 (U.S.C.C.A.) The general rule that a court has no power to set aside or modify its judgments or decrees after the term does not apply to orders and decrees in a bankruptcy proceeding as to which there are no separate terms.—In re Burr Mfg. & Supply Co., 126.

(B) Voluntary Proceedings.

§ 48 (U.S.C.C.A.) Orders by a court of bankruptcy in proceedings against a bankrupt cor-

poration, directing that, on payment into court by a stranger to the proceedings of a stated sum, to be used in payment of the then proved claims of unsecured creditors, the proceedings should stand dismissed, made without notice to the bankrupt or its creditors, *held* without authority.—Luxury Fruit Co. v. Harris, 434.

(C) Involuntary Proceedings.

§ 58 (U.S.C.C.A.) Where an alleged bankrupt was a stockholder in an insolvent bank, in the hands of the bank commissioner, and he executed a note to the commissioner for his double liability, secured by a mortgage on nonexempt real property, he was guilty of an act of bankruptcy.—Fulkerson v. Shaffer, 271.

Under Bankr. Act 1898, § 3a (2), providing that an act of bankruptcy shall consist in a transfer by a debtor while insolvent of any portion of his property with intent to prefer the assignee, a transfer to a trustee for creditors will be treated as if made direct to the creditors.—Id.

§ 100 (U.S.C.C.A.) If a petition in involuntary bankruptcy charges different acts of bankruptcy, and the adjudication does not show upon which one it proceeded, it does not render either charge res judicata in the further proceedings.—In re Julius Bros., 328.

III. ASSIGNMENT, ADMINISTRATION, AND DISTRIBUTION OF BANKRUPT'S ESTATE.

(B) Assignment, and Title, Rights, and Remedies of Trustee in General.

§ 149 (U.S.C.C.A.) Under Bankr. Act 1898, § 5, subsec. "h," where only one partner of a firm is adjudged a bankrupt, the bankruptcy court does not draw to itself the administration of the partnership estate, except by consent of the solvent partner, who is entitled to administer the business, accounting to the bankrupt's trustee only for the bankrupt's interest in the business.—Marnet Oil & Gas Co. v. Staley, 108.

The act of a bankrupt partner in surrendering to his trustee property belonging to the firm did not enlarge the jurisdiction of the bankruptcy court to administer the partnership property, where the solvent partner did not consent or waive its right to administer such property. —Id.

(C) Preferences and Transfers by Bankrupt, and Attachments and Other Liens.

§ 164 (U.S.C.C.A.) Where insurance was effected on mortgaged property, and, the proceeds thereof having been collected, a portion thereof was surrendered to the mortgagor, who had become bankrupt, that it might be repaid to the mortgagee in liquidation of an unsecured debt, the amount so relinquished at once became the property of the mortgagor, and when repaid constituted a preference.—Stearns Salt & Lumber Co. v. Hammond, 411.

§ 168 (U.S.C.C.A.) Where a mortgagee surrendered a portion of the proceeds of certain insurance to the mortgagor, that it might be repaid to the mortgagee and credited on an unsecured debt, the transaction was not such that, on the repayment being declared a preference, the mortgagee could claim the right then to credit it against the mortgage debt.—Stearns Salt & Lumber Co. v. Hammond, 411.

Where a bankrupt delivered certain personal property to a creditor and received credit for the price on a debt, which transfer constituted a preference, it was no objection to the trustee's maintenance of assumpsit that the creditor had not received money or money's worth for the property.—Id.

§ 188 (U.S.C.C.A.) A vendor's lien given by Rev. Codes, Idaho, §§ 3441, 3443, *held* valid against the trustee in bankruptcy of the purchaser.—In re Lane Lumber Co., 402.

The amendment of Bankr. Act 1898, § 47a, by Act June 25, 1910, § 8, relating to rights of lien creditors as to property coming to trustee, construed.—Id.

The fact that a vendor of land to a corporation was its secretary, and that he did not assert his right to a vendor's lien until after its bankruptcy, in the absence of evidence of fraud, *held* not to invalidate his lien.—Id.

§ 189 (U.S.C.C.A.) Bankr. Act 1898, § 67a, which makes invalid as liens against the estate of a bankrupt claims which for want of record would not have been valid liens against the claims of creditors, applies only to claims which are required by the state law to be recorded.—In re Lane Lumber Co., 402.

§ 209 (U.S.C.C.A.) Where there is an adverse claim to property, based on a transfer antedating bankruptcy, it can only be determined in a plenary suit; but where the property is in the physical possession of a third person or agent of the bankrupts, who refuses to deliver, the trustee may recover it by means of a summary order.—In re Goldstein, 91.

§ 212 (U.S.C.C.A.) Where a bankrupt's trustee brings summary proceedings to recover property in the hands of a third person, a noncolorable claim, requiring dismissal, appears on the filing of the claimant's verified answer, which, if true, shows title and possession antedating the bankruptcy petition.—In re Goldstein, 91.

(D) Administration of Estate.

§ 235 (U.S.C.C.A.) An order for examination of a bankrupt, under Bankr. Act, § 21a, should not be granted in involuntary proceedings, where there has been no adjudication, nor appointment of a receiver, without notice to the bankrupt.—Rawlins v. Hall-Epps Clothing Co., 594.

An order requiring bankrupts to appear for examination before a referee at a distance from their residence, and generally to produce their books, writings, and memoranda, *held* unreasonable and erroneous, as too broad.—Id.

§ 236 (U.S.C.C.A.) Under Bankr. Act, § 21a, the court has authority to order the examination of a bankrupt or other witnesses at any time after the filing of an involuntary petition, although there has been no adjudication, nor appointment of a receiver.—Rawlins v. Hall-Epps Clothing Co., 594.

§ 269 (U.S.C.C.A.) The difference between $6,250, for which property was first sold by a trustee in bankruptcy, and $8,500, which it brought on a resale, *held* not to show such a gross inadequacy of price as to justify the va-

cation of the confirmation and the setting aside of the first sale.—In re Burr Mfg. & Supply Co., 126.

§ 272 (U.S.C.C.A.) Settlement of the accounts of a trustee, with respect to a sum received by him and his counsel in settlement of a criminal prosecution and irregularly used outside the bankruptcy proceedings, approved.—In re Di Cola, 437.

(E) Actions by or Against Trustee.

§ 288 (U.S.C.C.A.) Where claimants of assets sought to be recovered by a bankrupt's trustee objected to summary proceedings, denied that they held possession for the bankrupts, and testified to facts which, if true, showed title and possession in themselves prior to the institution of bankruptcy proceedings, the court should dismiss the proceeding.—In re Goldstein, 93.

§ 288 (U.S.C.C.A.) Where a claimant's right to hold cloth seized under a distress warrant against a bankrupt depended on whether the lien was obtained within four months prior to the bankruptcy proceeding, as provided by Bankr. Act, § 67f, the validity of such lien was not so void of color as to authorize the bankruptcy court to determine it by summary proceedings over protest.—In re Luken, 94.

§ 288 (U.S.C.C.A.) A court of bankruptcy is without jurisdiction in a summary proceeding to decree specific performance of a contract made by a bankrupt by directing his trustee to execute a conveyance of land.—Dreyer v. Perkins, 599.

§ 293 (U.S.C.C.A.) Where a bankrupt's trustee had possession of real property of the bankrupt, located in another state, the bankruptcy court in which the proceedings were pending had jurisdiction, by any proceedings which would constitute due process of law, to determine whether a mortgage, executed to secure a pre-existing debt, was a voidable preference.—Galbraith v. Robson-Hilliard Grocery Co., 46.

§ 306 (U.S.C.C.A.) The admission in evidence, in an action by a trustee in bankruptcy to recover an alleged preferential payment, of the inventory and appraisement made in the bankruptcy proceeding, *held* not prejudicial to defendant, where the testimony of a witness also introduced by plaintiff placed a much higher valuation on the property than that shown by the appraisement.—Bergdoll v. Harrigan, 615.

(F) Claims Against and Distribution of Estate.

§ 310 (U.S.C.C.A.) Where all of the mortgage bonds of a bankrupt corporation were proved by the owners and allowed, no foreclosure suit having been instituted, and the property was sold by the trustee in bankruptcy, the court *held* to have properly rejected the claim of the mortgage trustee, which sought to prove the entire debt in its own name.—United States Trust Co. v. Gordon, 117.

§ 311 (U.S.C.C.A.) A secured creditor of a bankrupt, who proves his debt as unsecured, waives his security.—In re Burr Mfg. & Supply Co., 126.

§ 314 (U.S.C.C.A.) Where a subscriber for an increase of stock paid in advance the price thereof, under the agreement that such payment should be treated as loan until issuance of the stock, and before that the corporation was adjudged a bankrupt, the subscriber was entitled to have his claim allowed as a general claim against the bankrupt.—Clark v. Hamilton, 223.

§ 341 (U.S.C.C.A.) The action of a referee in bankruptcy, allowing or disallowing a claim, is a final judgment, in the absence of review.—Stearns Salt & Lumber Co. v. Hammond, 411.

A referee's order allowing a creditor's claim *held* not res judicata that the creditor had not received a preference, where subsequent to such allowance the trustee was directed to sue the creditor to recover the preference.—Id.

§ 342½ (U.S.C.C.A.) Where a bankrupt filed three separate claims against his trustee for services rendered to the estate, two of which were disallowed and the third allowed in part, his acceptance of such allowance did not estop him from the right to review the referee's decision as to the other claims.—Peck v. Richter, 590.

§ 345 (U.S.C.C.A.) Conflicting claims to liens under a mortgage of a bankrupt corporation considered.—Sterne v. Merchants' Nat. Bank, 66.

V. RIGHTS, REMEDIES, AND DISCHARGE OF BANKRUPT.

§ 407 (U.S.C.C.A.) The provision of Bankr. Act 1898, § 14b (4), as amended by Act Feb. 5, 1903, § 4, making a transfer of property with intent to hinder, delay, or defraud creditors ground for denying a discharge to a bankrupt, construed.—In re Julius Bros., 328.

A sale and transfer by an insolvent partnership of all of its property for its full value, the proceeds being used to discharge its indebtedness so far as possible without preference, *held* not a transfer with intent to hinder, delay, or defraud creditors, which barred the right of the partners to discharge under Bankr. Act 1898, § 14b (4), as amended by Act Feb. 5, 1903, § 4.—Id.

§ 407 (U.S.C.C.A.) A "materially false statement" made by a bankrupt, which is ground for the denial of a discharge, is a direct statement, either negative or positive, which is false, and is not satisfied by blanks left under a schedule of liabilities in a statement made by the bankrupt.—International Harvester Co. of America v. Carlson, 430.

Where a bankrupt made a full disclosure of his financial condition to an objecting creditor's agent, and depended on him to enter the facts according to the disclosure, and signed the statement so made without reading it, it was not "false," so as to bar the bankrupt's discharge, though it was inaccurate.—Id.

§ 407 (U.S.C.C.A.) The word "false," as used in Bankr. Act, § 14b (3), means false, coupled with an intention to deceive, "intentionally untrue," and was not satisfied by a financial statement made by the bankrupt while away from home, omitting $4,300 of his debts and also as-

sets of an equal or greater amount.—Franklin v. Monning Dry Goods Co., 601.

§ 415 (U.S.C.C.A.) Where the record of an order extending the time in which to file exceptions to the report of a special master on objections to a bankrupt's discharge had never been entered of record, and had been lost or destroyed, the court at a subsequent term had power to supply the record.—International Harvester Co. of America v. Carlson, 430.

The report of a referee on specifications of objection to a bankrupt's discharge is advisory only; the court being bound to pass on the issue whether exceptions are filed to the report or not.—Id.

The District Judge, under Bankr. Act 1898, § 14, subd. "b," as amended in 1910, *held* bound to pass an independent judgment on an application for a bankrupt's discharge, regardless of the report of a referee.—Id.

VI. APPEAL AND REVISION OF PROCEEDINGS.

(A) Superintendence and Revision.

§ 439 (U.S.C.C.A.) Jurisdiction to review a summary order in bankruptcy proceedings is by original petition under Bankr. Act 1898, § 24b.—In re Goldstein, 91.

§ 440 (U.S.C.C.A.) "Proceedings in bankruptcy," as used in Bankr. Act. §§ 23–25, *held* to cover questions between the alleged bankrupt or the receiver or trustee on the one hand and the general creditors, arising in the settlement of the estate, while "controversies at law and in equity arising in the course of bankruptcy proceedings" involve questions between the receiver or trustee and adverse claimants concerning property, to be litigated in suits.—In re Breyer Printing Co., 82; In re Orr, 87.

Petition of a bankrupt's landlord to be paid rent in arrear out of the proceeds of property seized, in which the trustee claimed a superior title to the chattels, *held* not a proceeding in bankruptcy, reviewable by petition to review, but a controversy arising in the course of bankruptcy proceedings, reviewable by appeal. —Id.

§ 440 (U.S.C.C.A.) An order of a court of bankruptcy, made on a petition for the allowance of a claim as a secured debt is reviewable by appeal under Bankr. Act July 1, 1898, § 25a (3) and not on petition to revise under section 24b.—In re Lane Lumber Co., 398.

§ 440 (U.S.C.C.A.) Where petitioner filed a claim against a bankrupt, and also claimed a lien on property held by the trustee, the issue of petitioner's right to a lien was a controversy arising in the bankruptcy proceedings, reviewable by petition to superintend and revise, authorized by Bankr. Act, § 24, subd. "b," and not by appeal under section 25, subd. "a."—Hutting Sash & Door Co. v. Stitt, 641.

Where, on the bankruptcy of a subcontractor, it was agreed that a materialman should prosecute its claim and its claim of lien in the bankruptcy court, the claim of lien having been denied, the trustee was estopped to claim that the dispute as to petitioner's right to a lien was not a controversy arising in bankruptcy proceedings, reviewable by petition to superintend and revise under Bankr. Act, § 24, subd. "b."—Id.

(B) Appeal.

§ 455 (U.S.C.C.A.) An order of a court of bankruptcy allowing a claim of $500 or more as a secured claim, although it incidentally affects other liens on the same property, is reviewable by appeal under Bankr. Act, § 25a.—Sterne v. Merchants' Nat. Bank, 66.

VII. COSTS AND FEES.

§ 482 (U.S.C.C.A.) A referee in bankruptcy is not a "referee," within the meaning of Rev. St. § 824 (Comp. St. 1913, § 1378), providing for the taxation of an attorney's docket fee on a trial before referees or on final hearing in equity, and in no event can more than one docket fee be taxed in any one bankruptcy proceeding.—Peck v. Richter, 590.

BANKS AND BANKING.

See Bankruptcy, § 58.

II. BANKING CORPORATIONS AND ASSOCIATIONS.

(B) Capital, Stock, and Dividends.

§ 40 (U.S.C.C.A.) A good-faith pledgee of the stock of a bank to whom the certificates have been duly assigned and delivered is the owner in equity of such stock, though the certificates may not be transferred to him on the books as required by a by-law or rule of the corporation.—Eubank v. Bryan County State Bank of Caddo, Okl., 37.

§ 42 (U.S.C.C.A.) A bank organized under the Banking Law of Oklahoma *held* not entitled to a lien on stock standing in the name of a director as security for a loan made to him in direct violation of the statute as against a prior pledgee of the stock in good faith.—Eubank v. Bryan County State Bank of Caddo, Okl., 37.

BILLS AND NOTES.

See Bankruptcy, § 58; Conspiracy, § 45.

BONA FIDE PURCHASERS.

See Vendor and Purchaser, §§ 220, 232.

BONDS.

See Corporations, § 472; Executors and Administrators, § 528; Railroads, § 152.

BOUNDARIES.

II. EVIDENCE, ASCERTAINMENT, AND ESTABLISHMENT.

⟹40 (U.S.C.C.A.) The location of the lines of a survey *held*, under the evidence, a question of fact for the jury.—Kentucky Coal Lands Co. v. Mineral Development Co., 151.

BRIDGES.

See Commerce, § 27.

CANCELLATION OF INSTRUMENTS.

See Indians, § 13; Public Lands, § 120; Witnesses, § 139.

CARRIERS.

See Judgment, § 237; Wharves, § 3.

I. CONTROL AND REGULATION OF COMMON CARRIERS.

(B) Interstate and International Transportation.

§ 32 (U.S.C.C.A.) An agreement for a milling in transit privilege with reference to the manufacture and shipment of saccharine feed, *held* a violation of Interstate Commerce Act, § 2, sections 6, 10, as amended by Act March 12, 1889, and Elkins Act Feb. 19, 1903, prohibiting rebates, concessions, etc.—Lewis, Leonhardt & Co. v. Southern Ry. Co., 237.

§ 35 (U.S.C.C.A.) Where a contract for a milling in transit privilege was illegal as violative of the Interstate Commerce Act, complainant could not recover damages for its breach.—Lewis, Leonhardt & Co. v. Southern Ry. Co., 237.

IV. CARRIAGE OF PASSENGERS.

(A) Relation Between Carrier and Passenger.

§ 242 (U.S.C.C.A.) A civilian driver attached to a National Guard regiment, while riding in a car with horses belonging to the regiment, under orders from his commanding officer, *held* not a trespasser.—New York, N. H. & H. R. Co. v. Halstead, 1.

(D) Personal Injuries.

§ 316 (U.S.C.C.A.) On an accident to a passenger, he being in the exercise of due care, the burden rests on the carrier to show that its whole duty was performed, and that the injury was unavoidable by human foresight.—Midland Valley R. Co. v. Conner, 628.

§ 318 (U.S.C.C.A.) Evidence *held* to sustain a verdict in favor of a passenger, riding in a freight car, for alleged injuries suffered by reason of a defect therein.—New York, N. H. & H. R. Co. v. Halstead, 1.

§ 320 (U.S.C.C.A.) Whether a ridge of ice on defendant's depot platform, on which a passenger fell, had negligently been permitted to remain for one or more days prior to the accident, *held* for the jury.—Chicago, St. P., M. & O. Ry. Co. v. Rorvig, 625.

§ 321 (U.S.C.C.A.) In an action for death of a passenger, plaintiff having pleaded specific acts of negligence only, an instruction submitting the doctrine of res ipsa loquitur, and charging that it not only raised a presumption of negligence, but shifted the burden of proof, was error.—Midland Valley R. Co. v. Conner, 628.

CERTIFICATE.

See Aliens, § 46.

CHANCERY.

See Equity.

CHARGE.

To jury, see Trial, §§ 252, 260.

CHARTER.

See Shipping, § 53.

CHINESE.

See Aliens, § 32.

CITIES.

See Municipal Corporations.

CLAIMS.

See Bankruptcy, §§ 310–345, 440; Executors and Administrators, § 281; Patents, § 101, 165, 168.

COLLECTION.

See Taxation, §§ 545, 608.

COLLISION.

I. RULES AND PRECAUTIONS FOR PREVENTING COLLISIONS IN GENERAL.

§ 18 (U.S.C.C.A.) Acts of negligence which do not contribute to a collision as a proximate cause do not render a ship liable.—The Curtin, 519.

VI. VESSELS IN TOW.

§ 66 (U.S.C.C.A.) A finding that a collision on the Columbia river at night between meeting tows was due to the fault of the down-bound tug, whose tow became unmanageable because of the current and was carried into the wrong side of the channel, *held* supported by the evidence.—The Samson, 260.

X. NARROW CHANNELS, HARBORS, RIVERS, AND CANALS.

§ 105 (U.S.C.C.A.) A finding that a collision on the Elizabeth river in the evening between a gasoline launch and a meeting tug was due solely to the fault of the tug in changing her course shortly prior to the collision *held* supported by the evidence.—The Curtin, 519.

XII. SUITS FOR DAMAGES.

(D) Damages.

§ 132 (U.S.C.C.A.) Where a vessel, which became a total loss as the result of a collision, had no market value, the cost of her construction, with proper deduction for depreciation, was properly taken as the measure of damages.—The Samson, 260.

(E) Trial or Hearing, Judgment, and Review.

§ 149 (U.S.C.C.A.) Whether negligence imputed is the proximate cause of a collision or merely collateral or immaterial is a question of fact.—The Curtin, 519.

§ 153 (U.S.C.C.A.) Where the conclusion of the district court as to whether negligence im-

puted is the proximate cause of the collision is not against the preponderance of the evidence, it cannot be disturbed by an appellate court.—The Curtin, 519.

COMMERCE.

See Injunction, § 105.

II. SUBJECTS OF REGULATION.

§ 27 (U.S.C.C.A.) An employé on a bridge on a cut-off not yet provided with rails or used as a railroad was not employed in interstate commerce, within the protection of the federal Employers' Liability Act, though his employer was engaged in interstate commerce and intended to use the cut-off therein when completed.—Bravis v. Chicago, M. & St. P. Ry. Co., 228.

The federal Employers' Liability Act does not protect persons employed in constructing instrumentalities intended for use in interstate commerce, but not yet used therein.—Id.

§ 40 (U.S.C.C.A.) Sale of merchandise shipped from one state to another to the seller's agent, though unidentified, and by him delivered to the appropriate customer, *held* interstate commerce, and not subject to a local licensing ordinance.—City of Lee's Summit v. Jewel Tea Co., 637.

COMMISSION AND COMMISSIONERS.

See Indians, § 13; Taxation, § 535.

COMMON LAW.

See Husband and Wife, § 115; Liens, § 16.

COMPARATIVE NEGLIGENCE.

See Negligence, § 97.

COMPENSATION.

See Corporations, § 487; Executors and Administrators, § 494.

COMPETENCY.

See Witnesses, §§ 139, 150.

CONCLUSIVENESS.

See Judgment, § 670.

CONSOLIDATION.

See Corporations, § 584.

CONSPIRACY.

See Appeal and Error, § 970; Criminal Law, § 150, 304; Evidence, § 253; Trial, § 60.

II. CRIMINAL RESPONSIBILITY.

(A) Offenses.

§ 33 (U.S.C.C.A.) Under Rev. St. § 5440 (Comp. St. 1913, § 10201), relating to conspiracy to defraud the United States, the offense consists of the unlawful scheme upon which the minds of conspirators have met, together with any act to effect the object of the conspiracy.—Houston v. United States, 562.

(B) Prosecution and Punishment.

§ 43 (U.S.C.C.A.) An indictment under Rev. St. § 5440 (Comp. St. 1913, § 10201), for conspiracy to defraud the United States, *held* sufficient.—Houston v. United States, 562.

Under an indictment charging defendants as individuals, evidence of acts done in the name of corporations of which defendants were officers *held* admissible.—Id.

Under an indictment under Rev. St. § 5440 (Comp. St. 1913, § 10201), charging a conspiracy to defraud the United States, it was not error to admit evidence of other overt acts than those specifically named in the indictment.—Id.

§ 45 (U.S.C.C.A.) On a trial for conspiracy, a letter written by defendant, who was secretary of a corporation, to a bank authorizing an employé to sign checks on behalf of the corporation, *held* admissible as tending to show that the employé had authority to indorse checks made payable to the corporation.—Houston v. United States, 562.

CONSTITUTIONAL LAW.

See Courts, § 366.

III. DISTRIBUTION OF GOVERNMENTAL POWERS AND FUNCTIONS.

(B) Judicial Powers and Functions.

§ 67 (U.S.C.C.A.) Whether the charges and threatened deprivation of shareholders of a water users' association of water, and threatened cancellation of their rights, are illegal, are questions for the court.—Magruder v. Belle Fourche Valley Water Users' Ass'n, 524.

§ 72 (U.S.C.C.A.) Decisions of the officers of the Executive Department of the United States on questions of law are not conclusive on the courts.—Magruder v. Belle Fourche Valley Water Users' Ass'n, 524.

CONSTRUCTION.

See Courts, § 366; Insurance, § 146; Patents, §§ 101, 157–168; Statutes, §§ 197–225.

CONTEMPT.

See Injunction, § 230.

II. POWER TO PUNISH, AND PROCEEDINGS THEREFOR.

§ 54 (U.S.C.C.A.) It is sufficient, in a proceeding for contempt, if the offense is set out, so that the defendant is clearly informed of the charges against him, and whether a criminal or civil contempt is alleged, and this is to be determined by examination of the entire record.—Schwartz v. United States, 576.

§ 66 (U.S.C.C.A.) While, in a case of criminal contempt, the trial court must be convinced of the guilt of the accused beyond a reasonable doubt, a finding of such fact, supported by competent evidence, cannot be reviewed by an appellate court.—Schwartz v. United States, 576.

CONTRACTS.

See Assignments; Bankruptcy, § 288; Carriers, § 35; Corporations, §§ 433, 472, 487, 657; Deeds; Evidence, §§ 441-450; Injunction, § 57; Insurance; Logs and Logging, § 26; Mortgages; Partnership, § 5; Patents, § 216; Principal and Agent, §§ 69, 103; Sales; Specific Performance; Subrogation; United States, § 127; Vendor and Purchaser.

I. REQUISITES AND VALIDITY.

(A) Nature and Essentials in General.

§ 1 (U.S.C.C.A.) A "personal contract" is a contract made by the person or corporation to be bound, as distinguished from one imputed to such person or corporation.—Benner Line v. Pendleton, 349.

§ 10 (U.S.C.C.A.) A contract by which one party pays a valuable consideration for the privilege of purchasing property from the other is not invalid, for want of mutuality, because he does not obligate himself to buy.—Conley Camera Co. v. Multiscope & Film Co., 96.

A contract by which the sole maker of a patented article agrees to supply such articles to a dealer having an established trade therein is not invalid, for want of mutuality, because the dealer does not expressly obligate himself to buy from the other party.—Id.

(F) Legality of Object and of Consideration.

§ 116 (U.S.C.C.A.) A contract by a railroad company giving a telegraph company the exclusive right to maintain a telegraph line upon its right of way is contrary to public policy and void.—Western Union Telegraph Co. v. Postal Telegraph Co., 385.

III. MODIFICATION AND MERGER.

§ 238 (U.S.C.C.A.) Civ. Code Cal. § 1698, which provides that "a contract in writing may be altered by a contract in writing, or by an executed oral agreement, and not otherwise," does not prevent a valid waiver by parol of a provision of a written contract.—Fairbanks, Morse & Co. v. Nelson, 212.

V. PERFORMANCE OR BREACH.

§ 303 (U.S.C.C.A.) Where one covenant of a contract stipulates for acts to be done at specified times, and another covenant stipulates for acts to be done, without fixing any time for performance, a breach of the latter covenant is no defense to an action for a breach of the former.—Busch v. Stromberg-Carlson Telephone Mfg. Co., 244.

§ 316 (U.S.C.C.A.) A written contract may be waived in whole or in part, either directly or inferentially.—Fairbanks, Morse & Co. v. Nelson, 212.

CONTRIBUTORY NEGLIGENCE.

See Negligence, §§ 93, 97.

CORPORATIONS.

See Bankruptcy, § 20; Banks and Banking; Carriers; Courts, § 322; Executors and Administrators, §§ 106, 118; Injunction, § 114; Insurance; Municipal Corporations; Railroads.

VII. CORPORATE POWERS AND LIABILITIES.

(B) Representation of Corporation by Officers and Agents.

§ 433 (U.S.C.C.A.) Evidence of the authority of an officer of a corporation to make a contract on its behalf *held* sufficient to take the question to the jury in an action for breach of a contract so made.—New York & Philadelphia Coal & Coke Co. v. Meyersdale Coal Co., 441.

(D) Contracts and Indebtedness.

§ 472 (U.S.C.C.A.) A subscription agreement construed, and *held* to constitute an "underwriting," a contract to insure the sale of bonds at par or to buy them at that price, and not a mere contract to make a loan.—Busch v. Stromberg-Carlson Telephone Mfg. Co., 244.

In an action against a subscriber to a contract to insure the sale of corporate bonds at par or to buy them at that price, neither the subsequent insolvency of the corporation nor the subsequent depreciation of the bonds and stock constitutes any defense.—Id.

In an action for breach of an underwriting binding defendant to sell corporate bonds at par or to pay for same at that price at agreed times, *held*, that the corporation's breach of an independent agreement to build a plant, in consideration of which defendant had doubled his subscription, constituted no defense, where such agreement fixed no time for such erection and was not referred to in the underwriting.—Id.

The measure of damages for a subscriber's breach of his contract of underwriting is the difference between the price at which he agreed to insure the sale, or to purchase the securities, and their value.—Id.

§ 487 (U.S.C.C.A.) Even though a contract by a corporation was ultra vires, such fact will not defeat its right to compensation for work done thereunder, where the contract has been fully executed on its part.—St. Avit v. Kettle River Co., 76.

X. CONSOLIDATION.

§ 584 (U.S.C.C.A.) Sale of assets by vote of majority stockholders to another corporation for a price payable in stock, with an arrangement for payment in cash to dissenting stockholders, will not be enjoined, unless dissenting stockholders were paid more than the valuation thereby fixed.—Jackson Co. v. Gardiner Inv. Co., 266.

XII. FOREIGN CORPORATIONS.

§ 657 (U.S.C.C.A.) Rev. St. Mo. 1899, § 1026, prohibiting unlicensed foreign corporations from maintaining actions, *held* not to entitle other parties to maintain a suit to enjoin enforcement of a contract made by such corporation.—St. Avit v. Kettle River Co., 76.

CORRESPONDENCE.

See Sales, § 32.

COSTS.

See Insolvency, § 185.

COUNTIES.

See Receivers, § 153.

COURT RULES.

See Courts, §§ 85, 352.

COURTS.

See Bankruptcy, §§ 22, 36, 288, 293; Contempt; Constitutional Law, § 72; Receivers, § 91; Taxation, § 608.

I. NATURE, EXTENT, AND EXERCISE OF JURISDICTION IN GENERAL.

§ 7 (U.S.C.C.A.) An action of ejectment under the Kentucky Code, which permits also the recovery of damages for detention, is a local and not a transitory action.—Kentucky Coal Lands Co. v. Mineral Development Co., 151.

II. ESTABLISHMENT, ORGANIZATION, AND PROCEDURE IN GENERAL.

(C) Rules of Court and Conduct of Business.

§ 85 (U.S.C.C.A.) A court may in an exceptional case set aside one of its rules.—Omaha Electric Light & Power Co. v. City of Omaha, 52.

(D) Rules of Decision, Adjudications, Opinions, and Records.

§ 96 (U.S.C.C.A.) A decree of the Circuit Court of Appeals, in a suit in equity determining the lines of a survey, *held* not conclusive under the rule of stare decisis in a subsequent action at law between different parties, where additional evidence raised new questions of fact.—Kentucky Coal Lands Co. v. Mineral Development Co., 151.

VII. UNITED STATES COURTS.

(A) Jurisdiction and Powers in General.

§ 269 (U.S.C.C.A.) Under Judiciary Act 1875, §§ 1, 8, as amended by Act March 3, 1887, and Act Aug. 13, 1888, § 1, a federal court of the district in which the property is situated, where the necessary diverse citizenship exists, has jurisdiction of a local action described in said section 8, without regard to the residence of the parties.—Kentucky Coal Lands Co. v. Mineral Development Co., 151.

§ 280 (U.S.C.C.A.) In a federal appellate court, the question of the jurisdiction of that court, and of the trial court, must be determined, whether raised by the parties or not.—Farmers' Oil & Guano Co. v. Duckworth Co., 278.

In the federal courts, jurisdiction must affirmatively appear in the record.—Id.

(C) Jurisdiction Dependent on Citizenship, Residence, or Character of Parties.

§ 300 (U.S.C.C.A.) Where, in a suit for infringement, the patents in suit are adjudged void, and the parties are both citizens of the same state, the court is without jurisdiction to determine a cause of action alleged for unfair competition.—Schiebel Toy & Novelty Co. v. Clark, 490.

§ 308 (U.S.C.C.A.) In a suit in a federal court by the trustees of an insolvent to recover assets, where one of the trustees refuses to join as a complainant, he may be made a defendant, and the fact that he is a citizen of the same state as another defendant does not deprive the court of jurisdiction.—Georgia S. & F. Ry. Co. v. Einstein, 657.

§ 311 (U.S.C.C.A.) The citizenship and residence of the trustee in a mortgage, and not of the owner of the claim secured, determines the jurisdiction of a federal court of a suit to foreclose.—Smith v. Bell, 517.

§ 322 (U.S.C.C.A.) Allegations in the petition in an action between two corporations *held* insufficient to show the requisite diversity of citizenship.—Farmers' Oil & Guano Co. v. Duckworth Co., 278.

(D) Jurisdiction Dependent on Amount or Value in Controversy.

§ 328 (U.S.C.C.A.) Where a number of complainants, each claiming a separate tract of land, although under the same act of Congress, unite in a suit to establish their claims, their causes of action are separate, and the value of the lands cannot be aggregated to give jurisdiction.—Bateman v. Southern Oregon Co., 605.

(E) Procedure, and Adoption of Practice of State Courts.

§ 352 (U.S.C.C.A.) Federal courts are not bound by the rules obtaining in local courts, for interpreting special verdicts; the general rule being that in determining what judgment shall be entered on a special verdict, the court will not look to the evidence nor beyond the pleadings and the judge's record.—Spokane & I. E. R. Co. v. Campbell, 370.

§ 356 (U.S.C.C.A.) The practice of the English Chancery Court and of the federal trial courts in equity in entertaining bills of review is not properly applicable to courts of appeal.—Omaha Electric Light & Power Co. v. City of Omaha, 52.

§ 356 (U.S.C.C.A.) On the death of one of the judges of the Circuit Court of Appeals, after a cause has been argued and submitted, where the remaining judges are not fully agreed on the case, a rehearing will be granted that it may be submitted before a full bench.—James v. Clements, 170.

(F) State Laws as Rules of Decision.

§ 365 (U.S.C.C.A.) A state *held* not entitled to maintain a proceeding for a writ of mandamus to compel allowance of an appeal by a federal court in behalf of one of its levee districts.—United States ex rel. State of Louisiana v. Boarman, 487.

§ 366 (U.S.C.C.A.) The construction placed on a statute by the highest court of a state controls the national courts, where such construction does not violate the federal Constitution or statutes or any policy of general law.—Wilckens v. Wilckens, 202.

(H) Circuit Courts of Appeals.

§ 405 (U.S.C.C.A.) By an order staying its mandate pending an appeal to the Supreme Court from its decision, a Circuit Court of Appeals retains its jurisdiction, so that a dismissal of the appeal leaves the cause still pending in that court, which may revise or change its decree, although the term at which it was entered has passed.—Omaha Electric Light & Power Co. v. City of Omaha, 52.

A decree of a Circuit Court of Appeals, set aside on rehearing after the term, where mandate had been stayed pending an appeal to the Supreme Court, which was dismissed for want of jurisdiction, and a new decree entered to conform to a decree of the Supreme Court in a later case, determining the precise question involved.—Id.

VIII. CONCURRENT AND CONFLICTING JURISDICTION, AND COMITY.

(B) State Courts and United States Courts.

§ 489 (U.S.C.C.A.) A federal court, which in a foreclosure suit had taken possession by its receivers of all of the property of a corporation, situated in three states, under Judicial Code, § 56, *held* to have power, with the consent of defendant and its lienholders, to turn over possession and the control and management of such property to receivers appointed by a state court, which had the better right to possession of that situated within its own state.—Kansas City Pipe Line Co. v. Fidelity Title & Trust Co., 181.

COVENANTS.

See Contracts, § 303.

CREDITORS' SUIT.

See Bankruptcy, § 20.

§ 47 (U.S.C.C.A.) A motion to dismiss a creditors' suit, on the ground of an adequate remedy at law, made after the appointment of receivers who had incurred obligations and expenditures, *held* too late.—Yaryan Naval Stores Co. v. B. Borchardt Co., 488.

CRIMINAL LAW.

See Conspiracy, §§ 33–45; Contempt, §§ 54, 66; Extradition; Injunction, § 105.

VI. LIMITATION OF PROSECUTIONS.

§ 150 (U.S.C.C.A.) Where a conspiracy to defraud the United States was formed more than three years prior to the indictment, and acts in pursuance thereof were done both prior to and within the three years' prosecution therefor under Rev. St. § 5440 (Comp. St. 1913, § 10201), it is not barred by the limitation imposed by Rev. St. § 1044, as amended in 1876 (Comp. St. 1913, § 1708).—Houston v. United States, 562.

X. EVIDENCE.

(A) Judicial Notice, Presumptions, and Burden of Proof.

§ 304 (U.S.C.C.A.) A proceeding for criminal contempt growing out of a civil suit is collateral to it, and the court may take judicial notice in the trial of the contempt proceeding of all orders made in the civil cause.—Schwartz v. United States, 576.

DAMAGES.

See Collision, § 132; Corporations, § 472; Sales, §§ 384, 418.

DEATH.

See Appeal and Error, § 1062; Carriers, § 321.

DECLARATIONS.

See Appeal and Error, § 970.

DECREE.

See Equity, § 427.

DEEDS.

See Evidence, § 383; Mortgages; Witnesses, § 139.

IV. PLEADING AND EVIDENCE.

§ 211 (U.S.C.C.A.) Evidence *held* insufficient to sustain plaintiff's contention that a deed was procured by the duress of threats of the grantee, her son, to commit suicide.—Wilckens v. Wilckens, 202.

DELAY.

See Executors and Administrators, §§ 281, 314.

DEPOSITS IN COURT.

See Bankruptcy, § 48.

DESCENT AND DISTRIBUTION.

See Executors and Administrators.

DISCHARGE.

See Bankruptcy, §§ 407–415.

DISCLOSURE.

See Bankruptcy, § 407.

DISCRETION OF COURT.

See Appeal and Error, §§ 954–977; Injunction, §§ 135, 161; New Trial, § 6.

DISMISSAL AND NONSUIT.

See Bankruptcy, §§ 48, 288; Courts, § 405; Creditors' Suit, § 47; Judgment, § 237.

DISSOLUTION.

See Injunction, § 161; Partnership, § 273.

DOCKET FEES.

See Bankruptcy, § 482.

DOCUMENTS.

See Evidence, §§ 359, 383.

DURESS.

See Deeds, § 211.

EJECTMENT.

See Courts, § 7.

ELECTION OF REMEDIES.

See Pleading, § 369.

EMPLOYERS' LIABILITY ACTS.

See Commerce, § 27.

EMPLOYÉS.

See Master and Servant.

EQUITY.

See Courts, § 356; Creditors' Suit; Injunction; Insolvency, § 188; Quieting Title; Receivers; Specific Performance; Subrogation; Taxation, § 608; Trusts.

I. JURISDICTION, PRINCIPLES, AND MAXIMS.

(B) Remedy at Law and Multiplicity of Suits.

§ 46 (U.S.C.C.A.) The remedy at law which will preclude a suit in equity, must be as prompt, efficient, and adequate as the remedy in equity.—Magruder v. Belle Fourche Valley Water Users' Ass'n, 524.

IV. PLEADING.

(E) Demurrer, Exceptions, and Motions.

§ 263 (U.S.C.C.A.) Since a bill in equity need state only the ultimate facts, a court should be cautious not to strike out a bill for mere lack of fullness of detail in allegation.—Clinchfield Coal Corporation v. Steinman, 585.

X. DECREE AND ENFORCEMENT THEREOF.

§ 427 (U.S.C.C.A.) A money decree against a defendant railroad company *held* not within the issues made by the pleadings.—Georgia S. & F. Ry. Co. v. Einstein, 657.

In general, a prayer for general relief in a bill cannot authorize the granting of relief outside of the case made by the allegations of the bill.—Id.

ERROR, WRIT OF.

See Appeal and Error.

ESTATES.

See Executors and Administrators.

ESTOPPEL.

See Bankruptcy, §§ 342½, 440; Patents, §§ 129, 168, 202; Submission of Controversy, § 14.

EVIDENCE.

See Admiralty, § 118; Aliens, § 46; Appeal and Error, §§ 842, 927, 970, 1011, 1056, 1062; Bankruptcy, § 306; Carriers, §§ 316, 318; Collision, §§ 66, 105; Conspiracy, §§ 43, 45; Corporations, § 433; Criminal Law, § 304; Deeds, § 211; Executors and Administrators, § 281; Habeas Corpus, § 92; Judicial Sales, § 39; Master and Servant, §§ 265, 270; Municipal Corporations, § 819; Patents, § 81; Principal and Agent, § 173; Public Lands, § 120; Sales, § 416; Trade-Marks and Trade-Names, § 93; Trial, § 252; Witnesses.

Reception of, see Trial, § 60.

I. JUDICIAL NOTICE.

§ 52 (U.S.C.C.A.) Where suit is brought in a federal court in New Hampshire for injuries sustained by plaintiff in an automobile accident occurring in Massachusetts, the court will take judicial notice of the law of the road of that state, so that Massachusetts decisions are inadmissible to prove such law as a fact.—Lane v. Sargent, 231.

VII. ADMISSIONS.

(A) Nature, Form, and Incidents in General.

§ 220 (U.S.C.C.A.) A newspaper article containing statements concerning the acts of a party is not admissible in evidence against him merely because, when called to his attention, he did not deny the statements.—Spencer v. Read, 360.

(D) By Agents or Other Representatives.

§ 253 (U.S.C.C.A.) Admissions by one alleged conspirator, made after the conspiracy has come to an end, by way of narration of past facts, are not admissible against others.—Spencer v. Read, 360.

X. DOCUMENTARY EVIDENCE.

(C) Private Writings and Publications.

§ 359 (U.S.C.C.A.) Where, immediately after plaintiff had fallen on a ridge of ice, the ice was removed, photographs of the premises, taken two or three days after the accident, were properly excluded.—Chicago, St. P., M. & O. Ry. Co. v. Rorvig, 625.

(D) Production, Authentication, and Effect.

§ 383 (U.S.C.C.A.) The recital of a consideration in a deed is not proof that such consideration, or any valuable consideration, was paid, to sustain an allegation that the grantee was a bona fide purchaser.—United States v. Brannan, 559.

XI. PAROL OR EXTRINSIC EVIDENCE AFFECTING WRITINGS.

(C) Separate or Subsequent Oral Agreement.

§ 441 (U.S.C.C.A.) Where a written contract of purchase specified terms of payment without reference to an alleged agreement to accept an old machine in part payment, a letter to the buyer from the seller's "Southern representative," not shown to have been approved by the seller's officers, was not a part of the contract.—Norfolk Sand & Gravel Corporation v. Ohio Locomotive Crane Co., 135.

§ 442 (U.S.C.C.A.) Certain written orders for jewelry *held* not a complete written contract, so as to preclude parol proof of a warranty of quality and a breach thereof.—Harris v. Marsh, 407.

(D) Construction or Application of Language of Written Instrument.

§ 450 (U.S.C.C.A.) In an action for the price of a tractor engine, a provision of the contract that the sale was "with the understanding that it proves adequate for your work," left such clause open to explanation by testimony as to the understanding of the parties and the purposes for which the engine was to be used.—Fairbanks, Morse & Co. v. Nelson, 212.

XII. OPINION EVIDENCE.

(A) Conclusions and Opinions of Witnesses in General.

§ 471 (U.S.C.C.A.) Objection *held* properly sustained to questions calling for the opinion of a witness as to whether the manner in which work was being done when an employé was injured was not the most practicable, and whether the machine used was not reasonably safe.—Potlatch Lumber Co. v. Harkins, 132

XIII. EVIDENCE AT FORMER TRIAL OR IN OTHER PROCEEDING.

§ 575 (U.S.C.C.A.) The admission in an action by a trustee in bankruptcy to recover preferences, of testimony previously given by the bankrupt on a hearing before the referee *held* error.—Pitts Banking Co. v. Clayton, 148.

EXAMINATION.

See Bankruptcy, §§ 235, 236.

EXCEPTIONS.

See Appeal and Error, §§ 272, 274, 501.

EXCEPTIONS, BILL OF.

See Appeal and Error, § 671.

EXECUTORS AND ADMINISTRATORS.

See Trusts, § 231.

IV. COLLECTION AND MANAGEMENT OF ESTATE.

(A) In General.

§ 93 (U.S.C.C.A.) Executors had no authority to operate, at the risk of the estate, a plantation in which the estate held a large interest, but are liable for the rental value of such interest.—Lovewell v. Schoolfield, 449.

§ 106 (U.S.C.C.A.) An executor who, as well as the testator, was a large stockholder in a business corporation *held* not authorized to lend money of the estate to such corporation without security.—Lovewell v. Schoolfield, 449.

§ 118 (U.S.C.C.A.) An executor who, as well as the testator, was a large stockholder in a business corporation *held* not liable for the loss of the stock belonging to the estate through insolvency of the corporation.—Lovewell v. Schoolfield, 449.

(C) Personal Property.

§ 160 (U.S.C.C.A.) Shannon's Code Tenn. § 3979, providing that executors and administrators shall sell the chattels of the deceased at public sale *held* not to control the discretion of executors given by the will.—Lovewell v. Schoolfield, 449.

VI. ALLOWANCE AND PAYMENT OF CLAIMS.

(D) Priorities and Payment.

§ 281 (U.S.C.C.A.) Under a statute requiring executors to pay proved claims against the estate within a stated time after issuance of letters testamentary, where claims were paid after such time, the presumption is that the delay was at the request of the executor, and he is not liable as for an illegal payment.—Lovewell v. Schoolfield, 449.

VII. DISTRIBUTION OF ESTATE.

§ 314 (U.S.C.C.A.) Where the settlement of the estate of a testator was justifiably delayed through a number of years, owing to the nature of the property and liabilities of the testator, limitation does not run against the claims of residuary legatees to their respective shares during the time of such delay.—Lovewell v. Schoolfield, 449.

XI. ACCOUNTING AND SETTLEMENT.

(B) Proceedings for Accounting.

§§ 473, 474 (U.S.C.C.A.) In a suit for an accounting by executors brought after their death, the limitation of the inquiry in the accounting to the items specified in the bill *held* not prejudicial error.—Lovewell v. Schoolfield, 449.

The form of report by a master in a suit for accounting by executors approved.—Id.

The master's report *held* not subject to objection because based in part on the cashbook kept by the executors.—Id.

(D) Compensation.

§ 494 (U.S.C.C.A.) In Tennessee an executor, acting also as attorney for the estate, may recover compensation for his services in both capacities.—Lovewell v. Schoolfield, 449.

(E) Stating, Settling, Opening, and Review.

§ 502 (U.S.C.C.A.) In a suit for an accounting against the representatives of deceased executors, who were also trustees under the will,

the manner of stating the accounts approved.—Lovewell v. Schoolfield, 449.

§ 514 (U.S.C.C.A.) In a suit for an accounting against the representatives of deceased executors, their accounts as presented to and approved by the probate court from time to time, under Shannon's Code Tenn. §§ 4031 et seq., 5567, *held* properly taken as prima facie correct.—Lovewell v. Schoolfield, 449.

XIII. LIABILITIES ON ADMINISTRATION BONDS.

§ 528 (U.S.C.C.A.) In Tennessee sureties of executors are liable for the rental value of the interest of the estate in land situated in another state, where such interest is personal property and was shown on the executors' inventory.—Lovewell v. Schoolfield, 449.

EXTRADITION.

See Bankruptcy, §§ 164, 168; Habeas Corpus, § 92.

II. INTERSTATE.

§ 34 (U.S.C.C.A.) Where affidavits in extradition proceedings were authenticated by the Governor of the demanding state, they were sufficiently authenticated, and the authority of the officer verifying the affidavits could not be called in question.—Chung Kin Tow v. Flynn, 666.

FEDERAL EMPLOYERS' LIABILITY ACT.

See Commerce, § 27; Pleading, § 369.

FEES.

See Insolvency, §§ 185, 188.

FINDINGS.

See Appeal and Error, § 1022.

FORECLOSURE.

See Mortgages, § 427.

FOREIGN CORPORATIONS.

See Corporations, § 657.

FOREIGN JUDGMENTS.

See Judgment, § 828.

FORFEITURES.

See Mines and Minerals, § 38.

FRAUD.

See Bankruptcy, §§ 407; Conspiracy, § 43; Criminal Law, § 150; Indians, § 13; Insurance, § 378; Judicial Sales, § 39; Principal and Agent, § 69; Taxation, § 608.

GAS.

§ 13 (U.S.C.C.A.) A pleading, alleging that a party failed to operate wells and furnish gas therefrom continuously, *held* insufficient to charge breach of a covenant to sell the surplus gas which such wells might produce.—Smith v. Bell, 517.

GIFTS.

I. INTER VIVOS.

§ 45 (U.S.C.C.A.) A bill *held* to state a cause of action to establish an equitable title to land under a parol gift.—Clinchfield Coal Corporation v. Steinman, 585.

GUARDS.

See Master and Servant, § 121.

HABEAS CORPUS.

See Aliens, § 32.

II. JURISDICTION, PROCEEDINGS, AND RELIEF.

§ 54 (U.S.C.C.A.) A petition by a Chinese person ordered deported for a writ of habeas corpus, alleging merely that petitioner was not given a fair hearing, *held* insufficient to sustain jurisdiction to issue the writ.—Lee Leong v. United States, 34.

§ 92 (U.S.C.C.A.) On petition for habeas corpus to review extradition proceedings, the warrant of the Governor of the asylum state is prima facie evidence that all legal prerequisites have been complied with; and if the proceedings before the Governor appear to be regular, it is conclusive evidence of the right to remove.—Chung Kin Tow v. Flynn, 666.

That it appeared that the Governor of the asylum state in extradition proceedings acted on the report of his Attorney General was immaterial, where it appeared that he also acted on the extradition papers from the demanding state.—Id.

HARMLESS ERROR.

See Appeal and Error, §§ 1031-1064.

HOMESTEAD.

See Taxation, § 181.

HUSBAND AND WIFE.

V. WIFE'S SEPARATE ESTATE.

(A) What Constitutes.

§ 115 (U.S.C.C.A.) While at common law the personal estate of a wife by the marriage becomes the property of her husband, he may validly agree to her retention thereof as her separate estate.—Lovewell v. Schoolfield, 449.

IMMIGRATION.

See Aliens, § 46.

IMPROVEMENTS.

See Municipal Corporations, § 535.

IMPUTED NEGLIGENCE.

See Negligence, § 93.

INDIANS.

See Taxation, § 181.

§ 13 (U.S.C.C.A.) Patents for an allotment of land, issued in the name of a person who died before the date on which the right to enrollment became fixed and the enrollment of whose name was procured by fraud, *held* void, and not to convey title to the land nor to protect subsequent purchasers.—Iowa Land & Trust Co. v. United States, 121.

A finding by the Commission to the Five Civilized Tribes that a person was entitled to enrollment and to an allotment, in a proceeding wholly ex parte, is not conclusive against the United States, suing to cancel the patent on the ground of fraud.—Id.

§ 18 (U.S.C.C.A.) Act April 26, 1906, § 5, and Act June 25, 1910, § 32, which provide for the contingency of the death of an Indian allottee, both assume the existence of a legal allottee, and neither has any application, where there never was such an allottee in existence.—Iowa Land & Trust Co. v. United States, 121.

INDICTMENT AND INFORMATION.

See Conspiracy, § 43.

INFRINGEMENT.

See Courts, § 300.

INJUNCTION.

See Adverse Possession, § 44; Appeal and Error, §§ 323, 954; Corporations, §§ 584, 657; Municipal Corporations, § 535; Taxation, § 608; United States, §§ 125, 127.

I. NATURE AND GROUNDS IN GENERAL.

(A) Nature and Form of Remedy.

§ 5 (U.S.C.C.A.) An injunction is a writ framed according to the circumstances of the case, and a court of equity is not always limited to the restraint of a contemplated or threatened action, but may require affirmative action, where the circumstances of the case demand it.—Western Union Telegraph Co. v. Postal Telegraph Co., 385.

II. SUBJECTS OF PROTECTION AND RELIEF.

(A) Actions and Other Legal Proceedings.

§ 26 (U.S.C.C.A.) The prosecution of an action at law against the complainant will not be enjoined to enable him to establish a counterclaim available in the action at law.—McKinnon v. New York Assets Realization Co., 255.

(C) Contracts.

§ 57 (U.S.C.C.A.) A court of equity *held* to have power under the facts shown to grant a mandatory injunction requiring a railroad company to execute a contract giving a telegraph company the right to maintain its line upon the railroad company's right of way—Western Union Telegraph Co. v. Postal Telegraph Co., 385.

(H) Criminal Acts, Conspiracies, and Prosecutions.

§ 105 (U.S.C.C.A.) Where city authorities had arrested complainant's agent several times, for failure to take out licenses under local ordinance to do an interstate business, and threatened to continue the same, an injunction was properly granted against further prosecutions; those pending being expressly exempted from the decree.—City of Lee's Summit v. Jewel Tea Co., 637.

III. ACTIONS FOR INJUNCTIONS.

§ 114 (U.S.C.C.A.) A corporation, with which the United States makes a contract, under Act June 17, 1902, is a proper party plaintiff to sue to enjoin collection of unlawful charges from the shareholders.—Magruder v. Belle Fourche Valley Water Users' Ass'n, 524.

IV. PRELIMINARY AND INTERLOCUTORY INJUNCTIONS.

(A) Grounds and Proceedings to Procure.

§ 135 (U.S.C.C.A.) The granting of an interlocutory injunction rests in the discretion of the trial court.—Magruder v. Belle Fourche Valley Water Users' Ass'n, 524.

§ 136 (U.S.C.C.A.) An interlocutory injunction may issue to maintain the status. where the questions are difficult, and injury disproportionate to the opposing party's inconvenience will result if injunction be denied.—Magruder v. Belle Fourche Valley Water Users' Ass'n, 524.

(B) Continuing, Modifying, Vacating, or Dissolving.

§ 161 (U.S.C.C.A.) The dissolution of an interlocutory injunction rests in the discretion of the trial court.—Magruder v. Belle Fourche Valley Water Users' Ass'n, 524.

VII. VIOLATION AND PUNISHMENT.

§ 230 (U.S.C.C.A.) A defendant, who appeared and contested a criminal proceeding against him for contempt for violation of an injunction, *held* not entitled to attack the judgment on the ground of the invalidity of the injunction.—Schwartz v. United States, 576.

§ 230 (U.S.C.C.A.) Charges of criminal contempt in violating an injunction *held* sufficiently specific to sustain a judgment of conviction.—Scoric v. United States, 581.

The omission of one defendant's name from one of the orders made in a contempt proceeding through a clerical error *held* not to invalidate a judgment against him.—Id.

§ 231 (U.S.C.C.A.) The question of the validity of an order granting an injunction, not appealed from, cannot be raised in an appellate court on review of a subsequent judgment for contempt for violation of the injunction.—Scoric v. United States, 581.

INSOLVENCY.

See Bankruptcy; Corporations, § 472; Courts, § 308; Executors and Administrators, § 118.

III. ASSIGNMENT, ADMINISTRATION, AND DISTRIBUTION OF INSOLVENT'S ESTATE.

(F) Claims Against and Distribution of Estate.

§ 109 (U.S.C.C.A.) The rule that, in the administration of insolvent estates, interest is not allowed after the commencement of the proceedings, applies only as between creditors who stand upon an equal basis, and not to a creditor having a prior lien on specific property in favor of unsecured creditors, nor where the estate proves sufficient to pay all creditors, with interest.—Huff v. Bidwell, 646.

VII. COSTS AND FEES.

§ 185 (U.S.C.C.A.) Where a temporary receiver was improvidently appointed in a proceeding in insolvency against the defendant, the costs of the receivership are properly taxable against the complainants who procured it.—Huff v. Bidwell, 646.

Complainants in an insolvency proceeding against a debtor *held* not personally liable for an unsuccessful resistance to the payment of paving assessments against the property of the defendant.—Id.

County and municipal taxes assessed upon property being administered by a court in insolvency proceedings against the owner are a part of the costs of administration, and cannot be required to contribute to the payment of solicitors' fees, awarded the complainants, but are entitled to payment in full, with interest. —Id.

§ 188 (U.S.C.C.A.) A court of equity has power to allow a fee to the solicitor of an insolvent defendant, whose estate is being administered, to be paid from the fund in court; but, if it appears on final distribution that the assets are sufficient to pay all debts and leave a surplus, it is not the province of the court either to fix the fee or to charge it upon the fund.—Huff v. Bidwell, 646.

Where a mortgagee, made a defendant in insolvency proceedings against the mortgagor, adopts such proceedings for the purpose of enforcing its lien, it may properly be required to contribute to the payment of a solicitor's fee awarded to the complainants from the fund in court.—Id.

INSTRUCTIONS.

To jury, see Trial, §§ 252, 260.

INSURANCE.

See Bankruptcy, §§ 164, 168; Corporations, § 472.

V. THE CONTRACT IN GENERAL.

(B) Construction and Operation.

§ 146 (U.S.C.C.A.) A court should give to contracts of insurance that reasonable construction which it is to be assumed intelligent business men would give it.—Canton Ins. Office v. Independent Transp. Co., 207.

The words used are to be understood in their ordinary sense, unless they have a different meaning by some generally established usage of the business.—Id.

X. FORFEITURE OF POLICY FOR BREACH OF PROMISSORY WARRANTY, COVENANT, OR CONDITION SUBSEQUENT.

(B) Matters Relating to Property or Interest Insured.

§ 313 (U.S.C.C.A.) Time policies on a vessel "warranted employed in the general passenger and freighting business on Puget Sound * * *" *held* avoided for breach of such warranty.—Canton Ins. Office v. Independent Transp. Co., 207.

XI. ESTOPPEL, WAIVER, OR AGREEMENTS AFFECTING RIGHT TO AVOID OR FORFEIT POLICY.

§ 378 (U.S.C.C.A.) Where false and material statements were made in an application for life insurance, that the medical examiner who wrote the statement was the agent of the company and knew them to be false *held* not to charge the company with such knowledge, nor prevent it from avoiding the policy for the fraud.—Mutual Life Ins. Co. of New York v. Powell, 417.

INTENT.

See Statutes, § 217.

INTEREST.

See Railroads, § 194.

INTERNAL REVENUE.

See Judgment, § 828.

INTERSTATE COMMERCE.

See Carriers, §§ 32, 35; Commerce, §§ 27, 40.

INTER VIVOS.

See Gifts, § 45.

INVENTION.

See Patents.

JUDGES.

See Courts, § 356.

JUDGMENT.

See Admiralty, § 118; Appeal and Error; Bankruptcy, § 341; Equity, § 427; Injunction, § 230.

VI. ON TRIAL OF ISSUES.

(B) Parties.

§ 237 (U.S.C.C.A.) In an action for injuries to a passenger riding in a freight car, by reason of a defect therein, while the car was in the possession of a terminal company, dismissal as to the latter did not require a dismissal as to the railroad company.—New York, N. H. & H. R. Co. v. Halstead, 1.

XIII. MERGER AND BAR OF CAUSES OF ACTION AND DEFENSES.

(B) Causes of Action and Defenses Merged, Barred, or Concluded.

§ 585 (U.S.C.C.A.) Where a second action is on the same claim and between the same parties or privies, the judgment in the first, if on the merits, is res judicata.—Linton v. Omaha Wholesale Produce Market House Co., 336.

That complainant, when previously sued to quiet title as trustee, did not rely on a certain deed, did not entitle him after adverse decree to maintain a suit to enforce the trust based on such deed.—Id.

XIV. CONCLUSIVENESS OF ADJUDICATION.

(B) Persons Concluded.

§ 670 (U.S.C.C.A.) A judgment in a former suit against L., whose interest was described in the body of the bill, but not in the caption, as that of a trustee, *held* a bar to a subsequent suit by L. as trustee.—Linton v. Omaha Wholesale Produce Market House Co., 336.

XVII. FOREIGN JUDGMENTS.

§ 828 (U.S.C.C.A.) A finding by a state probate that testator was a resident of and domiciled in British Columbia, but temporarily residing in San Francisco, *held* not binding on the United States in proceedings to recover a war revenue tax on a legacy.—Dunsmuir v. Scott, 194.

JUDICIAL NOTICE.

See Criminal Law, § 304; Evidence, § 52.

JUDICIAL SALES.

See Executors and Administrators, § 160.

§ 31 (U.S.C.C.A.) While confirmation of a sale made under an order of court does not pass the legal title, it vests the full equitable title to the property in the purchaser.—In re Burr Mfg. & Supply Co., 126.

A party, who with knowledge of irregularities in proceedings for a judicial sale fails to object before confirmation, loses his right by his laches.—Id.

§ 35 (U.S.C.C.A.) A judicial sale after confirmation should not be set aside, except for reasons for which equity would set aside a sale between individuals.—In re Burr Mfg. & Supply Co., 126.

§ 39 (U.S.C.C.A.) Inadequacy of price alone is not sufficient ground for setting aside a sale after confirmation, unless the inadequacy is so great as to raise a presumption of fraud or to shock the conscience of the court.—In re Burr Mfg. & Supply Co., 126.

§ 42 (U.S.C.C.A.) One must be a party who is interested and injuriously affected by a judicial sale to entitle him to apply to have it vacated.—In re Burr Mfg. & Supply Co., 126.

JURISDICTION.

See Courts.

LACHES.

See Judicial Sales, § 31; Quieting Title, § 29.

LANDLORD AND TENANT.

See Mines and Minerals, § 70.

LAW OF THE ROAD.

See Evidence, § 52.

LEASE.

See Receivers, § 91.

LETTERS.

See Evidence, § 441.

LEVEES.

See Courts, § 365.

LICENSES.

See Commerce, § 40; Injunction, § 105.

LIENS.

See Bankruptcy, §§ 188, 189, 288, 440; Banks and Banking, § 42; Mechanics' Liens; Taxation, § 507.

§ 16 (U.S.C.C.A.) By instituting proceedings to claim and perfect a lien given by statute, the claimant waives the right to claim a common-law lien.—Tucker v. Bryan, 428.

LIMITATION OF ACTIONS.

See Adverse Possession; Criminal Law; Executors and Administrators, § 314.

LOGS AND LOGGING.

§ 26 (U.S.C.C.A.) Persons contracting to log and cut certain timber for a stated price per thousand feet for the lumber produced *held* not "laborers," within the meaning of Code Va. 1904, § 2485, and not entitled to a lien on the lumber thereunder.—Tucker v. Bryan, 428.

MANDAMUS.

See Courts, § 365.

MARINE INSURANCE.

See Insurance, § 313.

MARRIAGE.

See Husband and Wife.

MASTER AND SERVANT.

See Appeal and Error, § 1064; Commerce, § 27.

III. MASTER'S LIABILITY FOR INJURIES TO SERVANT.

(B) Tools, Machinery, Appliances, and Places for Work.

§ 111 (U.S.C.C.A.) While the terms "locomotive engines" and "engineer" as used in Safety

Appliance Act, § 1, as amended by Act March 2, 1903, were primarily intended to refer to a steam-propelled engine and to the operator thereof, they were sufficiently broad to include an electric motor and the motorman thereof.—Spokane & I. E. R. Co. v. Campbell, 370.

§ 121 (U.S.C.C.A.) Code Supp. Iowa, 1907, § 4999a2, *held* to require an employer to guard all machines of a character dangerous to employés operating them or working in their vicinity.—United States Gypsum Co. v. Karnaca, 61.

(C) Methods of Work, Rules, and Orders.

§ 137 (U.S.C.C.A.) Failure of a railroad company to maintain on the footboard of a switch engine a man to warn employés who were accustomed to cross the railroad yard in going to and from their work, and to notify the engineer of their presence, *held* not negligence rendering the company liable for injuries to an employé.—Chicago, St. P., M. & O. Ry. Co. v. Kroloff, 377.

(F) Risks Assumed by Servant.

§ 219 (U.S.C.C.A.) The injury of an employé *held*, on the facts shown, due to risks which she assumed, either as obvious and known to her, or as unnecessarily taken and not incident to her employment.—W. H. McElwain Co. v. Bullock, 634.

(H) Actions.

§ 265 (U.S.C.C.A.) Since the doctrine of res ipsa loquitur is inapplicable to an employé's action for negligence, the plaintiff must prove that the negligence complained of was the proximate cause of the injury.—Armour & Co. v. Harcrow, 218.

§ 270 (U.S.C.C.A.) In an action for an injury to a mine employé against the employer, evidence to show the rule or custom prevailing in such workings with respect to the inspection of walls after a shot, and the person whose duty it was to attend to the same, *held* competent.—Beatson Copper Co. v. Pedrin, 29.

§ 270 (U.S.C.C.A.) In an action for injury to an employé, evidence *held* competent to show that the machine with which the employé and others were working was not in common use for the purpose, and was more dangerous than those in common use.—Potlatch Lumber Co. v. Harkins, 132.

§ 284 (U.S.C.C.A.) Evidence in an action for injury to a mine employé *held* such as to make it proper to submit the case to the jury.—Beatson Copper Co. v. Pedrin, 29.

§ 285 (U.S.C.C.A.) Evidence in a carpenter's action against his employer for injuries *held* insufficient to authorize submitting to the jury plaintiff's contention that lack of light was the proximate cause of the accident.—Armour & Co. v. Harcrow, 218.

§ 286 (U.S.C.C.A.) In an action for injuries to a servant, evidence *held* to require submission to the jury of the question of defendant's negligence in failing to warn plaintiff of the danger.—American Woolen Co. v. Stewart, 326.

§ 286 (U.S.C.C.A.) An action for injury to the conductor of an electric car for negligence in the operation of the car *held* properly submitted to the jury.—Lake Shore Electric Ry. Co. v. Kurtz, 521.

§ 289 (U.S.C.C.A.) Evidence *held* not to establish the contributory negligence as a matter of law of an employé in a gypsum mill who was injured by a revolving screw used to force gypsum through a conveyor, and which was left unguarded.—United States Gypsum Co. v. Karnaca, 61.

§ 293 (U.S.C.C.A.) Instructions *held* not erroneous.—Potlatch Lumber Co. v. Harkins, 132.

§ 297 (U.S.C.C.A.) In an action for injuries to a motorman in collision, due to a failure of his air brakes to work and his violation of orders, defendant *held* not entitled to a judgment on a special verdict, notwithstanding a general verdict for plaintiff under Employers' Liability Act.—Spokane & I. E. R. Co. v. Campbell, 370.

MECHANICS' LIENS.

I. NATURE, GROUNDS, AND SUBJECT-MATTER IN GENERAL.

§ 3 (U.S.C.C.A.) Const. Tex. art. 16, § 37, *held* to give a mechanic's lien to the classes of persons named in that section independent of statute, so that, though the statutes may extend the right, they cannot impair or detract from the rights conferred by the Constitution.—Huttig Sash & Door Co. v. Stitt, 641.

II. RIGHT TO LIEN.

(E) Subcontractors' and Contractors' Workmen and Materialmen.

§ 106 (U.S.C.C.A.) Petitioner, having manufactured for a bankrupt, a subcontractor, certain millwork and furnished certain material to be used in the construction of a building, *held* entitled to a lien under Const. Tex. art. 16, § 37.—Huttig Sash & Door Co. v. Stitt, 641.

MINES AND MINERALS.

See Appeal and Error, § 1056; Gas, § 13.

I. PUBLIC MINERAL LANDS.

(B) Location and Acquisition of Claims.

§ 38 (U.S.C.C.A.) In a suit to determine an adverse claim to a mining location, an allegation of the answer, denying the performance of the requisite assessment work and alleging that by reason thereof the claim became forfeited, *held* sufficient to support a plea of forfeiture, in the absence of an objection at the trial.—Cache Creek Mining Co. v. Brahenberg, 234.

II. TITLE, CONVEYANCES, AND CONTRACTS.

(C) Leases, Licenses, and Contracts.

§ 70 (U.S.C.C.A.) Where a lessee of coal lands paid royalties for ten years, three of which were after the death of the lessor, on a certain construction of the terms of the lease, which were somewhat ambiguous, it will be taken as the true construction as against the lessee.—Prudence Coal Co. v. Perkins, 421.

A lessor of coal lands may recover royalties due under the lease on coal previously mined and sold by the lessee under the common counts

in assumpsit in West Virginia, where by statute assumpsit may be maintained on a sealed contract.—Id.

MODIFICATION.

See Contracts, § 238.

MORTGAGES.

See Bankruptcy, §§ 58, 293, 310, 345; Courts, § 311; Insolvency, § 188; Railroads, § 194; Receivers, § 158.

X. FORECLOSURE BY ACTION.

(E) Parties and Process.

§ 427 (U.S.C.C.A.) The trustee in a mortgage is an indispensable party to a suit to foreclose; but the cestui que trust is not.—Smith v. Bell, 517.

MOTIONS.

See Pleading, §§ 367, 369.

MUNICIPAL CORPORATIONS.

See Insolvency, § 185.

IX. PUBLIC IMPROVEMENTS.

(F) Enforcement of Assessments and Special Taxes.

§ 535 (U.S.C.C.A.) Property owners, against whose property tax bills had been issued for the cost of paving, *held* not entitled to maintain a suit to enjoin their collection under Rev. St. Mo. 1899, § 5859, as amended by Laws Mo. 1901, p. 65.—St. Avit v. Kettle River Co., 76.

XI. USE AND REGULATION OF PUBLIC PLACES, PROPERTY, AND WORKS.

(A) Streets and Other Public Ways.

§ 705 (U.S.C.C.A.) A pedestrian and the operator of an automobile have equal rights in a city street, and each is bound to use ordinary care to avoid the other.—Lane v. Sargent, 231.

XII. TORTS.

(C) Defects or Obstructions in Streets and Other Public Ways.

§ 788 (U.S.C.C.A.) A municipality is not required to look for defects or dangers in its streets, but the measure of its duty is only to observe such as a reasonable supervision would disclose.—Borough of Du Bois v. Pancoast, 662.

§ 817 (U.S.C.C.A.) In an action against a municipal corporation to recover for an injury to plaintiff, caused by the giving way of the anchorage of a banner which had been stretched across a street by third persons, the doctrine of res ipsa loquitur cannot be invoked as against the defendant.—Borough of Du Bois v. Pancoast, 662.

§ 819 (U.S.C.C.A.) Evidence *held* insufficient to warrant a recovery against a municipal corporation for an injury to plaintiff by the falling of a banner over a street.—Borough of Du Bois v. Pancoast, 662.

MUTUALITY.

See Contracts, § 10.

NAMES.

See Injunction, § 230.

NAVIGABLE WATERS.

See Collision, § 105; Wharves.

NEGLIGENCE.

See Carriers, §§ 316–321; Collision, §§ 18, 153; Master and Servant, §§ 111–297; Railroads, §§ 376–383.

II. PROXIMATE CAUSE OF INJURY.

§ 58 (U.S.C.C.A.) The "natural consequence" of an act of negligence is the consequence which ordinarily follows it, the result which may reasonably be anticipated from it.—Armour & Co. v. Harcrow, 218.

A "probable consequence" of an act of negligence is one that is more likely to follow its supposed cause than not to follow it.—Id.

An injury which is the natural and probable result of an act of negligence is actionable.—Id.

§ 59 (U.S.C.C.A.) An injury which could not have been foreseen and reasonably anticipated as the probable result of the act of negligence is not actionable.—Armour & Co. v. Harcrow, 218.

III. CONTRIBUTORY NEGLIGENCE.

(C) Imputed Negligence.

§ 93 (U.S.C.C.A.) A passenger who, while riding with others, as a guest of the owner and driver of an automobile, at night, without lights, was injured when the machine ran over a railroad embankment into an unprotected cut, at a place not used as a public highway, *held* chargeable with contributory negligence, which precluded his recovery from the railroad company.—Rebillard v. Minneapolis, St. P. & S. S. M. Ry. Co., 9.

The rule that the negligence of the driver of a conveyance will not be imputed to a passenger, whether the conveyance is a public one or the passenger is the guest of the driver of a vehicle, does not apply where the passenger has full knowledge of the danger and voluntarily incurs the risk.—Id.

(D) Comparative Negligence.

§ 97 (U.S.C.C.A.) In an action for injuries to plaintiff while operating a wool-finishing machine, an instruction *held* erroneous as submitting the doctrine of comparative negligence, which is not a part of the law of New Hampshire, where the accident occurred.—American Woolen Co. v. Stewart, 326.

IV. ACTIONS.

(C) Trial, Judgment, and Review.

§ 136 (U.S.C.C.A.) Where the evidence leaves to speculation an allegation that an injury was

caused by negligence, a verdict should be directed for defendant.—Armour & Co. v. Harcrow, 218.

NEWSPAPERS.

See Evidence, § 220.

NEW TRIAL.

See Appeal and Error, § 977.

I. NATURE AND SCOPE OF REMEDY.

§ 6 (U.S.C.C.A.) The grant or refusal of a new trial in the federal courts rests in the sound discretion of the trial court.—Spokane & I. E. R. Co. v. Campbell, 370.

NOTICE.

See Bankruptcy, §§ 48, 235.

NOVELTY.

See Patents, §§ 75, 81.

OBJECTIONS.

See Evidence, § 471; Judicial Sales, § 31.

OFFICERS.

See Corporations, § 433; Receivers; United States, §§ 125, 127.

OPINION EVIDENCE.

See Evidence, § 471.

PAROL EVIDENCE.

See Evidence, §§ 441–450.

PARTIES.

See Appeal and Error, §§ 148, 323; Courts, § 308; Injunction, § 114; Judgment, § 237; Mortgages, § 427.

PARTNERSHIP.

See Bankruptcy, § 149; Patents, §§ 129, 202.

I. THE RELATION.

(A) Creation and Requisites.

§ 5 (U.S.C.C.A.) Where complainant corporation was formed and acquired the interest of one of the partners of a firm, and thereafter complainant and defendant, who had been the managing partner, continued the business, under agreement to share profits and losses, a partnership resulted, whether there was a partnership agreement between them or not.—Marnet Oil & Gas Co. v. Staley, 108.

VI. DEATH OF PARTNER, AND SURVIVING PARTNERS.

§ 245 (U.S.C.C.A.) A purchaser of real estate owned by a partnership from the surviving members, who had authority under the partnership articles to sell is not bound to look to the application of the proceeds, but acquires a good title.—Lovewell v. Schoolfield, 449.

VII. DISSOLUTION, SETTLEMENT, AND ACCOUNTING.

(A) Causes of Dissolution.

§ 273 (U.S.C.C.A.) Where no period was fixed for the continuance of a partnership, and defendant had been guilty of misconduct seriously prejudicial to the business, and complainant had advanced more than its share of the capital, it was entitled to a dissolution, and to a lien on the firm's assets, and on defendant's interest in those assets after payment of debts.—Marnet Oil & Gas Co. v. Staley, 108.

PASSENGERS.

See Carriers, §§ 242–321.

PATENTS.

See Courts, § 300; Indians, § 13; Public Lands, § 117.

II. PATENTABILITY.

(A) Invention.

§ 16 (U.S.C.C.A.) The mere carrying forward of an old idea and doing what had been done before in substantially the same way, but with possibly better results, is a change not involving invention.—Spirella Co. v. NuBone Corset Co., 102.

§ 17 (U.S.C.C.A.) Having gone into another art and adopted a device therefrom, and adapted it to this art, the patentee could not thereafter get a valid patent covering broadly another adoption from the same art for similar purpose. There remained open for the later patent only the adaptation, not the adoption.—Crown Cork & Seal Co. of Baltimore City v. Sterling Cork & Seal Co., 297.

§ 26 (U.S.C.C.A.) Invention may consist of old elements so combined as to co-operate and produce a new and useful result.—Schiebel Toy & Novelty Co. v. Clark, 490.

(E) Prior Public Use or Sale.

§ 75 (U.S.C.C.A.) Prior use, to invalidate a patent, must have been so far understood and practiced or persisted in as to have become an established fact, accessible to the public, and to have contributed definitely to the sum of knowledge.—Diamond Patent Co. v. S. E. Carr Co., 310.

A prior use, to negative novelty and invalidate a patent, must have been of an article which was complete and capable of producing the result accomplished by the patented article, and not merely of one which by modification could be made to perform the same function. —Id.

§ 81 (U.S.C.C.A.) The burden rests upon the defendant in an infringement suit to establish the defense of prior use and consequent want of novelty in the patent.—Diamond Patent Co. v. S. E. Carr Co., 310.

IV. APPLICATIONS AND PROCEEDINGS THEREON.

§ 101 (U.S.C.C.A.) A claim of a patent is not functional and invalid merely because one of its

specified elements is "means" or "mechanism." —Davis Sewing Machine Co. v. New Departure Mfg. Co., 505.

In determining whether the ambiguous terms of a claim should be confined more or less closely to the form shown in the drawings, it is usually well to compare with other claims which may not be in suit.—Id.

V. REQUISITES AND VALIDITY OF LETTERS PATENT.

§ 129 (U.S.C.C.A.) A partner, who was instrumental in procuring the sale and assignment by receivers of a patent owned by the firm, in a dissolution suit, *held* estopped to deny the validity of the patent.—Schiebel Toy & Novelty Co. v. Clark, 490.

IX. CONSTRUCTION AND OPERATION OF LETTERS PATENT.

§ 157 (U.S.C.C.A.) When the Patent Office has a settled rule of construction under which a certain phrase in a patent grant has a fixed meaning, acquiesced in by the patentee, the courts cannot afterward rightfully say that the phrase means something more or something less. —National Tube Co. v. Mark, 13.

§ 157 (U.S.C.C.A.) Only when necessary to make the claims of a patent operative, or in case of ambiguity apparent on the face of the claims, or induced by their study in connection with the specification and prior art, is a court permitted to read in an element not named therein to narrow a claim, so as to make valid one otherwise invalid.—Crown Cork & Seal Co. of Baltimore City v. Sterling Cork & Seal Co., 297.

(B) Limitation of Claims.

§ 165 (U.S.C.C.A.) At least in all recent patents, and save in exceptional instances, the presence or absence of the phrase "substantially as described" in a claim is of no interpretive importance.—National Tube Co. v. Mark, 13.

Where a patent contains both a broad and a narrow claim and suit is brought on the broad claim, the court cannot construe into it a limitation not therein expressed, but which is expressed in the narrower claim and by which alone one is distinguished from the other.—Id.

§ 165 (U.S.C.C.A.) The rule which ordinarily confines a patentee to the language he has used in stating his claims is not so hard and fast as to permit appropriation by another of the essence of his invention, merely because he has employed fit words to apply his invention to an earlier one, upon which it is an improvement.—Schiebel Toy & Novelty Co. v. Clark, 490.

§ 167 (U.S.C.C.A.) While a claim of a patent may not be enlarged by the language used in the specification, it may be illustrated thereby, and the specification and drawings may be resorted to for the purpose of better understanding the meaning of the claim.—Diamond Patent Co. v. S. E. Carr Co., 310.

§ 168 (U.S.C.C.A.) The amendment of a claim after its rejection by the examiner on reference to an earlier patent creates an estoppel against the patentee only when the effect was to narrow the claim.—National Tube Co. v. Mark, 13.

§ 168 (U.S.C.C.A.) To determine the effect of the rejection and amendment of a claim in the Patent Office in a suit for its infringement, the exact thing done must be examined, and especially in connection with the point in controversy.—Crown Cork & Seal Co. of Baltimore City v. Sterling Cork & Seal Co., 297.

X. TITLE, CONVEYANCES, AND CONTRACTS.

(B) Assignments and Other Transfers.

§ 202 (U.S.C.C.A.) A partner, who was instrumental in procuring the sale and assignment by receivers of a patent owned by the firm, in a dissolution suit, *held* estopped to deny the title of the purchaser, when sued for its infringement.—Schiebel Toy & Novelty Co. v. Clark, 490.

(C) Licenses and Contracts.

§ 216 (U.S.C.C.A.) A contract by the owner of a patent, who is the sole manufacturer of the patented article, to supply the same to a dealer as required, is not invalid because no length of time is specified.—Conley Camera Co. v. Multiscope & Film Co., 96.

XIII. DECISIONS ON THE VALIDITY, CONSTRUCTION, AND INFRINGEMENT OF PARTICULAR PATENTS.

§ 328.

ENGLAND.

1819.

4,393. Filter, cited..... 282

1831.

6,160. Apparatus for clarifying water and other fluids..... 282

1899.

8,371. Water cleansing apparatus, cited 282

UNITED STATES.

ORIGINAL.

59,467. Filter, cited..... 282
160,570. Friction pulley, cited..... 505
171,056. Apparatus for filtering liquids, cited 282
180,643. Machine for straightening round bars and tubes, cited..... 13
216,165. Car-axle bearings, cited..... 490
228,720. Car-axle box, cited..... 490
293,745. Filter, cited..... 282
423,430. Filter, cited..... 282
426,315. Brick machine, cited..... 297
426,439. Outer garment, cited..... 13
487,236. Journal bearing, cited 490
507,875. Dress stay, cited..... 102
593,174. Locomotive toy, cited..... 490
609,209. Machine for applying corks and seals to bottles, cited..... 297
622,834. Golf ball, held not anticipated, valid, and infringed..... 317
623,825. Back pedaling brake, cited..... 505

638,854. Machine for automatically sealing bottles, construed, and held not infringed 297
643,973. Automatic feeding apparatus for bottle-sealing machines, claim 2, construed, and held infringed.. 297
644,137. Method of purifying water, held not infringed..... 282
645,444. Corset stay stiffener, cited..... 102
676,420. Friction-driven locomotive toy, construed, and held valid and infringed 490
713,594. Back pedaling brake, cited..... 505
761,880. Rolls for twisting drills, cited.. 13
801,944. Showcase, held not anticipated and valid..... 310
850,077. Coaster brake for bicycles, construed and held not anticipated, valid, and infringed..... 505
868,763. Corset stay, cited..... 102
888,984. Apparatus for rifling pipes or tubes, held not anticipated, valid, and infringed as to claims 1, 2, and 3..... 13
930,107. Racer automobile toy, held void for prior public use..... 490
930,633. Engine locomotive toy, held void for prior public use..... 490
977,515. Corset stay, cited..... 102
1,002,488. Method of making garment stays, held void for lack of patentable novelty in view of disclosures of the prior art... 102

REISSUED.

11,672. Water filter, held not infringed.. 282

PAYMENT.

See Executors and Administrators, § 281; Subrogation.

PERSONAL INJURIES.

See Admiralty, § 118; Carriers, §§ 316–321; Master and Servant, §§ 111–297; Railroads, §§ 376–383.

PETITION.

See Habeas Corpus, §§ 54, 92.

PHOTOGRAPHS.

See Evidence, § 359.

PLEADING.

See Bankruptcy, § 100; Courts, § 322; Equity, § 263; Gas, § 13; Gifts, § 45; Mines and Minerals, § 38; Public Lands, § 120.

XI. MOTIONS.

§ 367 (U.S.C.C.A.) Under Gen. St. Minn. 1913, § 7770, objection to a complaint for indefiniteness or uncertainty must be taken by motion.—Conley Camera Co. v. Multiscope & Film Co., 96.

§ 369 (U.S.C.C.A.) Where the plaintiff employé amended his complaint at the close of his evidence, so as to state in a single count a cause of action under the federal Employers' Liability Act, he could not, after a directed verdict against him, repudiate his election thereby to abandon his cause of action under the state law.—Bravis v. Chicago, M. & St. P. Ry. Co., 228.

PLEDGES.

See Banks and Banking, §§ 40, 42.

POLICY.

See Insurance.

POSSESSION.

See Vendor and Purchaser, § 232.

PRACTICE.

For practice in particular actions and proceedings, see the various specific topics.

PREFERENCES.

See Bankruptcy, §§ 164–212.

PRESCRIPTION.

See Adverse Possession.

PRESUMPTIONS.

See Appeal and Error, § 927.

PRINCIPAL AND AGENT.

See Insurance, § 378.

II. MUTUAL RIGHTS, DUTIES, AND LIABILITIES.

(A) Execution of Agency.

§ 69 (U.S.C.C.A.) A purchase by an agent of an interest in property for which he had previously made a binding contract of sale on behalf of his principal *held* not a purchase from the principal, and valid, in the absence of fraud.—Hermann v. Hall, 619.

III. RIGHTS AND LIABILITIES AS TO THIRD PERSONS.

(A) Powers of Agent.

§ 103 (U.S.C.C.A.) An agent who made the contract for the sale of an engine for his principal must be held to have had authority to subsequently waive a provision of the written contract.—Fairbanks, Morse & Co. v. Nelson, 212.

(D) Ratification.

§ 173 (U.S.C.C.A.) In an action for the balance of the price of a crane, evidence *held* insufficient to show a ratification by the seller of an agreement of its agent to accept an old crane owned by the buyer as part payment.—Norfolk Sand & Gravel Corporation v. Ohio Locomotive Crane Co., 135.

PRINCIPAL AND SURETY.

See Appeal and Error, § 323; Executors and Administrators, § 528.

PRIORITY.

See Receivers, § 158.

PRIOR USE.

See Patents, §§ 75, 81.

PROFITS.

See Partnership, § 5.

PROXIMATE CAUSE.

See Negligence, §§ 58, 59.

PUBLIC IMPROVEMENTS.

See Municipal Corporations, § 535.

PUBLIC LANDS.

See Mines and Minerals, § 38.

II. SURVEY AND DISPOSAL OF LANDS OF UNITED STATES.

(J) Patents.

§ 117 (U.S.C.C.A.) A patent is conclusive against all persons whose rights did not commence previous to its issuance, and the fact that it may have been issued through fraud, error, or irregularity does not subject it to attack by one who at the time had no interest in the land.—Bateman v. Southern Oregon Co., 605.

Complainants *held* not entitled to maintain a suit in equity to enforce a constructive trust in lands held by defendant under patents from the United States purporting to convey the absolute title.—Id.

(K) Remedies in Cases of Fraud, Mistake, or Trust.

§ 120 (U.S.C.C.A.) In a suit by the United States, for the cancellation of a patent to land, against the patentee and subsequent grantees, where facts are alleged and proved which entitle complainant to a cancellation as against the patentee, further allegations in the bill that the other defendants bought with notice are surplusage, and a failure to prove them not a material variance, but that such defendants were bona fide purchasers is an affirmative defense, the burden of alleging and proving which rests upon them.—United States v. Brannan, 559.

III. DISPOSAL OF LANDS OF THE STATES.

§ 173 (U.S.C.C.A.) Act Tex. April 15, 1905, § 8, providing for the sale by the Commissioner of the General Land Office of public lands of the state appropriated to the school fund, *held* not to apply to lands claimed adversely to the state in good faith under Spanish or Mexican grants until the controversy between the state and the claimants has been adjudicated in favor of the state.—Southern Pine Lumber Co. v. Consolidated Louisiana Lumber Co., 479.

PUBLIC POLICY.

See Contracts, § 116.

PUBLIC SERVICE CORPORATIONS.

See Carriers; Railroads.

QUESTIONS OF LAW AND FACT.

See Appeal and Error, § 1011; Trial, § 145.

QUIETING TITLE.

II. PROCEEDINGS AND RELIEF.

§ 29 (U.S.C.C.A.) One in the exclusive possession of land under claim of title is not chargeable with laches in not bringing suit to establish his right, so long as no superior title is asserted by another.—Clinchfield Coal Corporation v. Steinman, 585.

RAILROADS.

See Carriers; Contracts, § 116; Injunction, § 57; Master and Servant; Receivers, §§ 153, 158; Taxation, § 390.

VIII. INDEBTEDNESS, SECURITIES, LIENS, AND MORTGAGES.

(A) Nature and Extent of Liabilities.

§ 152 (U.S.C.C.A.) A transfer of bonds of an insolvent railroad company pending foreclosure *held* to carry with it to the purchasers the right to stock of another company, which, by agreement with a bondholders' committee, was to be received in satisfaction of a guaranty on the bonds.—Georgia S. & F. Ry. Co. v. Einstein, 657.

(B) Foreclosure of Liens and Mortgages.

§ 194 (U.S.C.C.A.) The purchaser of railroad property at foreclosure sale, subject to the payment of such claims for operating and maintenance expenses as should ultimately be awarded priority over the mortgage debt, *held* liable for interest on such claims from the date of the sale.—Moore v. Donahoo, 171.

X. OPERATION.

(G) Injuries to Persons on or near Tracks.

§ 376 (U.S.C.C.A.) Where a trespasser was struck by defendant's train while removing a push car from the track, he was entitled to recover on proof of failure of defendant's engineer to use ordinary care to avoid the injury after actually discovering plaintiff's peril.—Great Northern Ry. Co. v. Harman, 631.

§ 381 (U.S.C.C.A.) Where a trespasser was struck by a train while removing a push car from the track, that he attempted to remove such car, instead of exercising all his efforts to escape personal injury, was not such negligence as would preclude a recovery for his injury, under the last clear chance doctrine.—Great Northern Ry. Co. v. Harman, 631.

§ 383 (U.S.C.C.A.) A pedestrian walking over a private railroad yard must exercise the utmost vigilance, and must look and listen, and, if his vision is obscured, must keep off the track until he can see whether there is danger in going upon it.—Chicago, St. P., M. & O. Ry. Co. v. Kroloff, 377.

RATIFICATION.

See Principal and Agent, § 173.

REAL ACTIONS.

See Quieting Title.

REBATES.

See Carriers, § 32.

RECEIVERS.

See Courts, 489; Insolvency, § 185.

IV. MANAGEMENT AND DISPOSITION OF PROPERTY.

(A) Administration in General.

§ 91 (U.S.C.C.A.) Where an order appointing receivers expressly required the approval of the court to all contracts and leases made by them, the fact that they continued to use leased property did not bind them as an adoption of the lease; the court not having been asked to adopt or disaffirm it.—Kansas City Pipe Line Co. v. Fidelity Title & Trust Co., 181.

V. ALLOWANCE AND PAYMENT OF CLAIMS.

§ 153 (U.S.C.C.A.) Where property of a railroad company located in Nebraska was in the hands of a receiver, the company being hopelessly insolvent, taxes assessed against it were collectible from the receiver, under Cobbey's Ann. St. Neb. 1911, §§ 10915, 10937.—Midland Guaranty & Trust Co. v. Douglas County, 274.

Where a receiver was liable for taxes assessed on property in his hands, it was the duty of the county to which the taxes were payable to appear in the receivership case and pray for an order directing payment by the receiver.—Id.

§ 158 (U.S.C.C.A.) In the distribution of the assets of an insolvent railroad company, preference will not be given to debts for necessary operating expenses incurred before the receivership, over prior mortgages, from the corpus of the property, unless it is necessary to enable the receiver to continue operation of the road.—Moore v. Donahoo, 171.

The right of persons furnishing labor or supplies necessary to the operation of a railroad to preference over a prior mortgage debt in case of insolvency, where such equity exists, is not dependent on the institution of the proceedings by the mortgagee.—Id.

The rights of persons, furnishing labor and supplies necessary to the operation of a railroad within the preferential period before a receivership, to the restoration of current income diverted during that time and its application to their claims, does not depend on whether their claims became due before or after the diversion.—Id.

RECEPTION.

Of evidence, see Trial, § 60.

RECORDS.

See Appeal and Error, §§ 501–842; Bankruptcy, §§ 189, 415; Courts, § 280.

REFEREES.

Bankruptcy, §§ 415, 482.

REFERENCE.

See Executors and Administrators, §§ 473, 474.

REPORT.

See Executors and Administrators, §§ 473, 474.

REPORTS.

See Bankruptcy, § 415.

RESIDENCE.

See Courts, §§ 269, 300–322.

RES IPSA LOQUITUR.

See Master and Servant, § 265; Municipal Corporations, § 817.

RES JUDICATA.

See Bankruptcy, §§ 100, 341; Judgment, §§ 585, 670.

REVENUE.

See Taxation.

REVIEW.

See Appeal and Error; Bankruptcy, §§ 342½, 345; Contempt, § 66.

RISKS.

Assumption of, see Master and Servant, § 219.

RULES.

See Bankruptcy, §§ 22, 36.

SALES.

See Evidence, §§ 442, 450; Gas, § 13; Judicial Sales; Vendor and Purchaser.

I. REQUISITES AND VALIDITY OF CONTRACT.

§ 32 (U.S.C.C.A.) Correspondence *held* to make a binding contract for the purchase and sale of coal for future delivery.—New York & Philadelphia Coal & Coke Co. v. Meyersdale Coal Co., 441.

VI. WARRANTIES.

§ 262½ (U.S.C.C.A.) A warranty cannot be implied from a sale of a known, described, and definite article made and warranted by another.—People's Light Co. v. Rathbun-Jones Engineering Co., 523.

§ 288 (U.S.C.C.A.) A buyer may accept delivery of goods sold under a warranty of quality, notwithstanding their failure to comply with the warranty, and invoke the seller's breach of warranty by way of counterclaim in reduction of damages, when sued for the price.—Harris v. Marsh, 407.

VII. REMEDIES OF SELLER.

(F) Actions for Damages.

§ 384 (U.S.C.C.A.) Measure of damages recoverable for breach of a contract to purchase

flour to be manufactured by plaintiff considered. —Erie Baking Co. v. Hubbard Milling Co., 489.

VIII. REMEDIES OF BUYER.

(C) Actions for Breach of Contract.

§ 416 (U.S.C.C.A.) Evidence offered *held* immaterial in an action for breach of contract of sale.—Conley Camera Co. v. Multiscope & Film Co., 96.

§ 418 (U.S.C.C.A.) For the breach of a seller's contract the buyer may recover such damages as are the natural and certain consequences thereof, but not those which are remote and speculative.—Norfolk Sand & Gravel Corporation v. Ohio Locomotive Crane Co., 135.

In an action for the price of a crane, the buyer *held* not entitled to recover on a counterclaim damages resulting from extra cost in unloading gravel with the crane, because of alleged defects therein, expense of demurrage, etc.—Id.

§ 420 (U.S.C.C.A.) Where it is doubtful whether items of damage for breach of a seller's contract are the natural and certain consequences of the breach, or are remote and contingent, the question is one of fact.—Norfolk Sand & Gravel Corporation v. Ohio Locomotive Crane Co., 135.

SCHOOLS AND SCHOOL DISTRICTS.

See Public Lands, § 173.

SEAMEN.

§ 6 (U.S.C.C.A.) When a vessel with all her cargo aboard left her dock to be towed to a buoy in the bay for temporary mooring, her voyage commenced.—Manhattan Canning Co. v. Wilson, 322.

§ 11 (U.S.C.C.A.) It is not a defense to a suit by a seaman to recover for the cost of medical attendance and care while disabled by an injury, that he had been guilty of a violation of the shipping articles which would have warranted his discharge.—Manhattan Canning Co. v. Wilson, 322.

§ 18 (U.S.C.C.A.) Rev. St. § 4527 (U. S. Comp. St. 1901, p. 3077), providing for the payment to a seaman of extra wages on improper discharge before a month's service, *held* not applicable where a seaman was taken from the vessel to a hospital because of injuries, but was not discharged.—Manhattan Canning Co. v. Wilson, 322.

§ 21 (U.S.C.C.A.) It is not a defense to a suit by a seaman to recover wages while disabled by an injury that he had violated the shipping articles, which would have warranted his discharge.—Manhattan Canning Co. v. Wilson, 322.

SEPARATE ESTATE.

See Husband and Wife, § 115.

SET-OFF AND COUNTERCLAIM.

See Injunction, § 26; Sales, § 288.

SETTING ASIDE.

See Judicial Sales, §§ 35, 39.

SHIPPING.

I. REGULATION IN GENERAL.

§ 6 (U.S.C.C.A.) Code Cr. Proc. Alaska, § 460, construed in connection with Act June 13, 1902, *held* not to exempt a transportation line operating vessels in Alaskan and Canadian waters from payment of the tax imposed by section 460, because the company had paid a tax on such vessels in Canada.—Northern Commercial Co. v. United States, 143.

Barges operated by craft propelled by mechanical power *held* subject to the license tax imposed by Code Cr. Proc. Alaska, § 460.—Id.

III. CHARTERS.

§ 53 (U.S.C.C.A.) A charterer, and not the owner of a vessel, *held* the bailee of the cargo, and as such entitled to maintain a suit in its own name against the owner for loss of the cargo through unseaworthiness of the vessel. —Benner Line v. Pendleton, 349.

VII. CARRIAGE OF GOODS.

§ 121 (U.S.C.C.A.) A shipowner warrants his ship to be seaworthy and fit for the cargo and particular service for which she is engaged at the commencement of the voyage, and such warranty is an absolute undertaking, and covers latent defects as well as those which are discernible by inspection.—Benner Line v. Pendleton, 349.

§ 132 (U.S.C.C.A.) The loss of cargo by the sinking of a schooner on a voyage from New York to Porto Rico *held*, on the evidence, due to the unseaworthiness of the vessel at the commencement of the voyage.—Benner Line v. Pendleton, 349.

§ 137 (U.S.C.C.A.) Harter Act, § 3, does not relieve a shipowner from the duty of furnishing a seaworthy vessel at the beginning of the voyage, nor affect his liability for the loss of the cargo arising from unseaworthiness.—Benner Line v. Pendleton, 349.

The managing owner of a vessel, who personally signed a charter party as her agent in which she was warranted seaworthy, *held* not entitled to limit his liability for a loss of the cargo through unseaworthiness, under Rev. St. § 4283 (U. S. Comp. St. 1913, § 8021), or Act June 26, 1884, § 18.—Id.

SPECIFIC PERFORMANCE.

See Bankruptcy, § 288.

II. CONTRACTS ENFORCEABLE.

§ 38 (U.S.C.C.A.) The requisities of a parol contract for the conveyance of land, to render it enforceable in equity, stated.—Clinchfield Coal Corporation v. Steinman, 585.

STARE DECISIS.

See Courts, § 96.

STATES.

See Courts, §§ 365, 489; Public Lands, § 173.

STATUTES.

VI. CONSTRUCTION AND OPERATION.

(A) General Rules of Construction.

§ 197 (U.S.C.C.A.) The words "or" and "and," in a statute, may be convertible, if the sense requires it.—Northern Commercial Co. v. United States, 143.

§ 206 (U.S.C.C.A.) In construing a statute, effect, if possible, must be given to every word and phrase, so as to render the statute a harmonious whole.—Northern Commercial Co. v. United States, 143.

§ 217 (U.S.C.C.A.) Where a statute is ambiguous, the court may put itself as far as possible in the light the Legislature enjoyed, including the history of the times, to discover the legislative intent, but not so when the language is clear.—Northern Commercial Co. v. United States, 143.

§ 225 (U.S.C.C.A.) Statutes relating to the same subject, including earlier acts that have expired or been repealed, must be construed in pari materia.—Northern Commercial Co. v. United States, 143.

STATUTES CONSTRUED.

UNITED STATES.

JUDICIAL CODE.

Act 1911, March 3, ch. 231, 36 Stat. 1087.

§ 56 181

STATUTES AT LARGE.

1869, March 3, ch. 150, 15 Stat. 340..... 605
1874, June 18, ch. 305, 18 Stat. 80..... 605
1875, March 3, ch. 137, §§ 1, 8, 18 Stat. 470, 472. Amended by Act 1887, March 3, ch. 373, § 1, 24 Stat. 552; Act 1888, Aug. 13, ch. 866, § 1, 25 Stat. 433..... 151
1882, May 6, ch. 126, § 6, 22 Stat. 60. Amended by Act 1884, July 5, ch. 220, 23 Stat. 116..... 31
1884, June 26, ch. 121, § 18, 23 Stat. 57.. 349
1885, July 5, ch. 220, 23 Stat. 116..... 31
1887, Feb. 4, ch. 104, 24 Stat. 379..... 237
1887, Feb. 4, ch. 104, § 2, 24 Stat. 379... 237
1887, Feb. 4, ch. 104, §§ 6, 10, 24 Stat. 380, 382. Amended by Act 1889, March 12, ch. 382, §§ 1, 2, 25 Stat. 855, 856... 237
1887, March 3, ch. 373, § 1, 24 Stat. 552 151
1888, Aug. 13, ch. 866, § 1, 25 Stat. 433 151
1889, March 12, ch. 382, §§ 1, 2, 25 Stat. 855, 856..... 237
1893, Feb. 13, ch. 105, § 3, 27 Stat. 445.. 349
1893, March 2, ch. 196, § 1, 27 Stat. 531 370
1898, June 28, ch. 517, 30 Stat. 495..... 121
1898, July 1, ch. 541, 30 Stat. 544..... 590
1898, July 1, ch. 541, § 3a, 30 Stat. 546.. 271
1898, July 1, ch. 541, § 5h, 30 Stat. 548 108
1898, July 1, ch. 541, § 14b, 30 Stat. 550. Amended by Act 1910, June 25, ch. 412, § 6, 36 Stat. 839..... 430
1898, July 1, ch. 541, § 14b(3), 30 Stat. 550 601
1898, July 1, ch. 541, § 14b(4), 30 Stat. 550. Amended by Act 1903, Feb. 5, ch. 487, § 4, 32 Stat. 797..... 328
1898, July 1, ch. 541, § 21a, 30 Stat. 552 594
1898, July 1, ch. 541, §§ 23, 24, 30 Stat. 552 82
1898, July 1, ch. 541, § 24b, 30 Stat. 553 .....91, 398, 641
1898, July 1, ch. 541, § 25, 30 Stat. 553.. 82
1898, July 1, ch. 541, § 25a, 30 Stat. 553 .....66, 641
1898, July 1, ch. 541, § 25a(3), 30 Stat. 553 398
1898, July 1, ch. 541, § 47a, 30 Stat. 557. Amended by Act 1910, June 25, ch. 412, § 8, 36 Stat. 840..... 402
1898, July 1, ch. 541, § 67a, 30 Stat. 564 402
1898, July 1, ch. 541, § 67f, 30 Stat. 564 94
1901, March 1, ch. 676, 31 Stat. 861.... 121
1902, June 17, ch. 1093, 32 Stat. 388.... 524
1902, June 30, ch. 1323, 32 Stat. 500.... 121
1902, July 13, ch. 1082, 32 Stat. 385.... 143
1903, Feb. 5, ch. 487, § 4, 32 Stat. 797.. 328
1903, Feb. 19, ch. 708, 32 Stat. 847..... 237
1903, March 2, ch. 976, 32 Stat. 943..... 370
1906, April 26, ch. 1876, § 5, 34 Stat. 138 121
1906, June 28, ch. 3572, § 2(4), (7), 34 Stat. 541, 542..... 87
1907, Feb. 20, ch. 1134, 34 Stat. 898.... 35
1908, April 22, ch. 149, 35 Stat. 65...228, 370
1910, June 25, ch. 412, § 6, 36 Stat. 839.. 430
1910, June 25, ch. 412, § 8, 36 Stat. 840 402
1910, June 25, ch. 431, § 32, 36 Stat. 863 121
1911, March 3, ch. 231, § 56, 36 Stat. 1102 181

REVISED STATUTES.

§§ 649, 700..... 194
§ 723 392
§ 824 590
§ 1044 562
§ 4283 349
§ 4527 322
§ 5440 562

COMPILED STATUTES 1901.

Page 1307 31
Page 3077 322
Page 3427 328
Page 3431 82
Page 3432 .....66, 82, 91, 398
Pages 3438, 3449..... 402
Page 3450 94

COMPILED STATUTES SUPP. 1911.

Page 499 35
Page 1496 328
Page 1500 402

COMPILED STATUTES 1913.

§ 991(1) 151
§ 1038 181
§ 1039 151
§ 1244 392
§ 1378 590
§§ 1587, 1668..... 194
§ 1708 562
§§ 4700–4708 524
§§ 8021, 8028, 8031..... 349
§§ 8563, 8564, 8569, 8574, 8597–8599.... 237

§§ 8605–8615 370
§§ 8657–8665 .....228, 370
§§ 9585–9656 590
§ 9587 271
§ 9539 108
§ 9598 .....430, 601
§ 9605 504
§§ 9608, 9609..... 641
§ 10201 562

ALASKA.

CODE OF CIVIL PROCEDURE.

§§ 248–250 143

CODE OF CRIMINAL PROCEDURE.

§ 460 143
§ 460. Amended by Pol. Code, § 29..... 140

POLITICAL CODE.

§ 29 140

CALIFORNIA.

CIVIL CODE.

§ 1698 212

COLORADO.

REVISED STATUTES 1908.

§ 5750 392

LAWS.

1913, p. 528, § 5..... 392

IDAHO.

REVISED CODES.

§§ 3441, 3443..... 402

IOWA.

CODE SUPPLEMENT 1907.

§ 4999a2 61

MINNESOTA.

GENERAL STATUTES 1913.

§ 7770 96

MISSOURI.

REVISED STATUTES 1899.

§ 1026 76
§ 5859. Amended by Laws 1901, p. 65... 76

LAWS.

1901, p. 65..... 76

NEBRASKA.

COMPILED STATUTES 1911.

§ 6882 202

COBBEY'S ANNOTATED STATUTES 1911.

§§ 10914, 10915, 10927, 10985..... 274

OKLAHOMA.

REVISED LAWS 1910.

§§ 262, 270, 294..... 37

TENNESSEE.

SHANNON'S CODE.

§ 3979 449
§ 4031 et seq..... 449
§ 5567 449

TEXAS.

CONSTITUTION.

Art. 16, § 37..... 641

LAWS.

1905, ch. 103, § 8..... 479

VIRGINIA.

CODE 1904.

§ 2485 428

STOCK.

See Banks and Banking, §§ 40, 42; Railroads, § 152.

STOCKHOLDERS.

See Corporations, § 584.

STREETS.

See Municipal Corporations, §§ 705, 788.

STRIKING OUT.

See Equity, § 263.

SUBMISSION OF CONTROVERSY.

§ 14 (U.S.C.C.A.) Where both parties without objection submitted a controversy to the court, as provided by Code Civ. Proc. Alaska, c. 28, one of them was estopped to object to the defeated party's right of review on the ground that the controversy was not one which could lawfully be so submitted.—Northern Commercial Co. v. United States, 143.

SUBROGATION.

§ 26 (U.S.C.C.A.) One who is under no legal obligation to pay a debt is, if he pays it, a mere volunteer, and cannot claim subrogation to the rights and securities of the creditor.—McKinnon v. New York Assets Realization Co., 255.

The owner of securities wrongfully pledged by another with securities of another owner, who voluntarily paid the debt after the lien of the pledgee had been extinguished by a tender, *held* not entitled to exoneration or contribution from the securities of the other owner.—Id.

SUBSCRIPTIONS.

See Bankruptcy, § 314; Corporations, § 472.

SURVEYS.

See Boundaries, § 40.

TAXATION.

See Insolvency, § 185; Municipal Corporations, § 535; Receivers, § 153; Shipping, § 6; Wharves, § 3.

III. LIABILITY OF PERSONS AND PROPERTY.

(C) Public Property and Institutions.

§ 181 (U.S.C.C.A.) The taxability of lands of Osage Indian allottees, both as to homestead and surplus lands, considered under Act June 28, 1906.—United States v. Board of Com'rs of Osage County, Okl., 87.

V. LEVY AND ASSESSMENT.

(D) Mode of Assessment of Corporate Stock, Property, or Receipts.

§ 390 (U.S.C.C.A.) Where a railroad located in Nebraska was in the hands of a receiver, it was properly listed by him for taxation, and assessed as personalty, as provided by Cobbey's Ann. St. Neb. 1911, §§ 10927, 10985.—Midland Guaranty & Trust Co. v. Douglas County, 274.

VI. LIEN AND PRIORITY.

§ 507 (U.S.C.C.A.) When delinquent personal taxes become a lien in November of each year, as provided by Cobbey's Ann. St. Neb. 1911, § 10914, the lien attaches, not only to the identical property taxed, but to all the personal property of the taxpayer in the county.—Midland Guaranty & Trust Co. v. Douglas County, 274.

VII. PAYMENT AND REFUNDING OR RECOVERY OF TAX PAID.

§ 535 (U.S.C.C.A.) Rev. St. Colo. § 5750, providing for the refunding by county commissioners of taxes found to be erroneous or illegal, *held* not repealed by Laws Colo. 1913, p. 528, § 5.—Union Pac. R. Co. v. Board of Com'rs of Weld County, Colo., 392.

VIII. COLLECTION AND ENFORCEMENT AGAINST PERSONS OR PERSONAL PROPERTY.

(A) Collectors and Proceedings for Collection in General.

§ 545 (U.S.C.C.A.) As a rule, statutes relating to taxation should be given a prospective operation only, and unless otherwise expressly provided statutes in force at the time a tax is levied continue in force for its collection, notwithstanding their amendment or repeal.—Union Pac. R. Co. v. Board of Com'rs of Weld County, Colo., 392.

(B) Summary Remedies and Actions.

§ 572 (U.S.C.C.A.) Under the Nebraska law, taxes are not "debts" in the ordinary sense, and an action will generally not lie to recover them.—Midland Guaranty & Trust Co. v. Douglas County, 274.

§ 573½ (U.S.C.C.A.) Under the Nebraska law, real property only is liable for the taxes assessed upon it, and the owner is not personally liable therefor; but personal taxes assessed are personal obligations of the owner, though he is not subject to suit therefor.—Midland Guaranty & Trust Co v. Douglas County, 274.

(C) Remedies for Wrongful Enforcement.

§ 608 (U.S.C.C.A.) Rev. St. Colo. § 5750, giving an action at law against the county for the recovery of sums paid on account of invalid taxes, provides a plain, speedy, and adequate remedy, which in general excludes the jurisdiction of equity to enjoin collection of a tax.—Union Pac. R. Co. v. Board of Com'rs of Weld County, Colo., 392.

Fraud of taxing officers in the assessment of property is not alone ground of equitable jurisdiction to restrain the collection of the tax, if there is an adequate remedy at law provided by statute.—Id.

A federal court of equity *held*, under Rev. St. § 723 (Comp. St. 1913, § 1244), not to have jurisdiction of a suit on the ground of the adequacy of the remedy at law.—Id.

TELEGRAPHS AND TELEPHONES.

See Contracts, § 116; Injunction, § 57.

THREATS.

See Deeds, § 211.

TIME.

See Bankruptcy, § 415; Executors and Administrators, §§ 281, 314.

TITLE.

See Judicial Sales, § 31.

TORTS.

See Carriers, §§ 316–321; Collision; Master and Servant, §§ 111–297; Municipal Corporations, §§ 788–819; Negligence.

TOWAGE.

See Collision, § 66; Seamen, § 6.

TRADE-MARKS AND TRADE-NAMES.

IV. INFRINGEMENT AND UNFAIR COMPETITION.

(C) Actions.

§ 93 (U.S.C.C.A.) Evidence *held* insufficient to sustain a bill for unfair competition by defendant in the adoption and use of a trade-name for its product.—Denver Chemical Mfg. Co. v. Lilley, 73.

TRESPASS.

See Carriers, § 242; Railroads, §§ 376, 383.

TRIAL.

See Adverse Possession, § 112; Appeal and Error, §§ 501, 1062, 1064; Boundaries, § 40; Carriers, §§ 320, 321; Collision, § 149; Constitutional Law, §§ 67, 72; Corporations, § 433; Master and Servant, §§ 284–297; Negligence, § 136; New Trial; Sales, § 420.

IV. RECEPTION OF EVIDENCE.

(B) Order of Proof, Rebuttal, and Reopening Case.

§ 60 (U.S.C.C.A.) The admission of declarations of alleged conspirators before the conspiracy has been sufficiently proved is discretionary with the trial court.—Spencer v. Read, 360.

VI. TAKING CASE OR QUESTION FROM JURY.

(A) Questions of Law or of Fact in General.

§ 145 (U.S.C.C.A.) At the close of the evidence, the trial court should on request direct a finding on each issue of fact on which the evidence is undisputed or conclusive.—Chicago, St. P., M. & O. Ry. Co. v. Kroloff, 377.

VII. INSTRUCTIONS TO JURY.

(D) Applicability to Pleadings and Evidence.

§ 252 (U.S.C.C.A.) In an action for injuries to plaintiff by being struck by defendant's automobile, requests to charge as to defendant's right to assume that plaintiff would continue in a place of safety, etc., *held* properly refused, as inapplicable to the facts presented by the evidence.—Lane v. Sargent, 231.

(E) Requests or Prayers.

§ 260 (U.S.C.C.A.) Where the jury were properly instructed on the issues in the case, the refusal of requests to charge is not error.—Lane v. Sargent, 231.

IX. VERDICT.

(B) Special Interrogatories and Findings.

§ 359 (U.S.C.C.A.) Where the entire controversy is dependent on the special verdict, it will prevail when it finds all the facts essential to a determination of every material issue in the case.—Spokane & I. E. R. Co. v. Campbell, 370.

TRUST DEEDS.

See Mortgages.

TRUSTEES.

See Bankruptcy, §§ 288–306.

TRUSTS.

See Public Lands, § 117.

IV. MANAGEMENT AND DISPOSAL OF TRUST PROPERTY.

§ 231 (U.S.C.C.A.) An executor and trustee under a will, to whom real estate in which both he and the estate had an equitable interest, was conveyed as such trustee, to be held for the trust estate, *held* entitled on an accounting to credit for the value of his personal interest in the property.—Lovewell v. Schoolfield, 449.

A testamentary trustee on an accounting *held* entitled to credit only for the amount paid by him for a claim against the beneficiary, and not for the amount of the claim.—Id.

ULTRA VIRES.

See Corporations, § 487.

UNDERWRITING.

See Assignments, § 18; Corporations, § 472.

UNFAIR COMPETITION.

See Courts, § 300; Trade-Marks and Trade-Names, § 93.

UNITED STATES.

See Conspiracy, §§ 33, 43; Courts, §§ 269–405, 489; Criminal Law, § 150; Indians; Trade-Marks and Trade-Names.

V. ACTIONS.

§ 125 (U.S.C.C.A.) A suit against the federal executive officers of the United States, to enjoin them from committing illegal acts, is not a "suit against the United States."—Magruder v. Belle Fourche Valley Water Users' Ass'n, 524.

§ 127 (U.S.C.C.A.) A suit to enjoin executive officers from committing illegal acts *held* not objectionable, as interfering with property of the United States, or compelling the United States to perform its contracts.—Magruder v. Belle Fourche Valley Water Users' Ass'n, 524.

VACATION.

See Judicial Sales, § 42.

VENDOR AND PURCHASER.

See Bankruptcy, § 188; Partnership, § 245; Principal and Agent, § 69; Sales.

V. RIGHTS AND LIABILITIES OF PARTIES.

(C) Bona Fide Purchasers.

§ 220 (U.S.C.C.A.) The equitable doctrine of bona fide purchaser without notice does not apply where there is a total absence of title in the vendor.—Iowa Land & Trust Co. v. United States, 121.

§ 232 (U.S.C.C.A.) Under the law of Virginia, open and peaceable possession of land under a claim of right is notice to a subsequent purchaser of the right or claim of the person in possession both to the surface and minerals thereunder.—Clinchfield Coal Corporation v. Steinman, 585.

VERDICT.

See Trial, § 359.

WAIVER.

See Bankruptcy, § 311; Contracts, §§ 238, 316; Liens, § 16; Principal and Agent, § 103.

WARRANTY.

See Sales, §§ 262½, 288; Shipping, § 121.

WATERS AND WATER COURSES.

See Constitutional Law, § 67.

WHARVES.

§ 3 (U.S.C.C.A.) A public carrier, operating a wharf in Alaska in connection, on which goods of various shippers were unloaded without charge, apart from the freight, *held* to operate a "public wharf," within Code Cr. Proc. Alaska, § 460, as amended by Pol. Code Alaska, § 29, imposing a license tax on public wharves.—Northern Commercial Co. v. United States, 140.

WILLS.

See Executors and Administrators; Trusts, § 231.

WITNESSES.

See Evidence.

II. COMPETENCY.

(C) Testimony of Parties or Persons Interested, for or against Representatives, Survivors, or Successors in Title or Interest of Persons Deceased or Incompetent.

§ 139 (U.S.C.C.A.) In an action to cancel deeds because procured through threats of the grantee, the grantor's son, to commit suicide, plaintiff, after the grantee's death, under Comp. St. Neb. 1911, § 6882, was not a competent witness as to the transaction.—Wilckens v. Wilckens, 202.

§ 150 (U.S.C.C.A.) An assign of a deceased person is his representative, within Comp. St. Neb. 1911, § 6882.—Wilckens v. Wilckens, 202.

WORDS AND PHRASES.

"Active managing officer."—Eubank v. Bryan County State Bank of Caddo, Okl., 37.
"And."—Northern Commercial Co. v. United States, 143.
"Any."—St. Avit v. Kettle River Co., 76.
"Brake."—Davis Sewing Mach. Co. v. New Departure Mfg. Co., 505.
"Brake drum."—Davis Sewing Mach. Co. v. New Departure Mfg. Co., 505.
"Brake pair."—Davis Sewing Mach. Co. v. New Departure Mfg. Co., 505.
"Brake shoe."—Davis Sewing Mach. Co. v. New Departure Mfg. Co., 505.
"Commencement of voyage."—Manhattan Canning Co. v. Wilson, 322.
"Conspiracy."—Houston v. United States, 562.
"Controversies at law and in equity in course of bankruptcy proceedings."—In re Breyer Printing Co., 82.
"Controversy arising in bankruptcy proceeding."—Huttig Sash & Door Co. v. Stitt, 641.
"Debt."—Midland Guaranty & Trust Co. v. Douglas County, 274.
"Effective size."—City of Harrisburg v. New York Continental Jewell Filtration Co., 282.
"Engineer."—Spokane & I. E. R. Co. v. Campbell, 370.
"False."—International Harvester Co. of America v. Carlson, 430.
"Final hearing in equity."—Peck v. Richter, 590.
"Final judgment."—Stearns Salt & Lumber Co. v. Hammond, 411.
"Found to be erroneous or illegal."—Union Pac. R. Co. v. Board of Com'rs of Weld County, Colo., 392.
"Injunction."—Western Union Tel. Co. v. Postal Telegraph Co., 385.
"In process of administration."—Rawlins v. Hall-Epps Clothing Co., 594.
"Interstate commerce."—City of Lee's Summit v. Jewel Tea Co., 637.
"Jurisdiction."—Kentucky Coal Lands Co. v. Mineral Development Co., 151.
"Laborer."—Tucker v. Bryan, 428.
"Local action."—Kentucky Coal Lands Co. v. Mineral Development Co., 151.
"Locomotive engine."—Spokane & I. E. R. Co. v. Campbell, 370.
"Material statement."—International Harvester Co. of America v. Carlson, 430.
"Means."—Davis Sewing Mach. Co. v. New Departure Mfg. Co., 505.
"Mechanism."—Davis Sewing Mach. Co. v. New Departure Mfg. Co., 505.
"Natural consequence."—Armour & Co. v. Harcrow, 218.
"Negative head."—City of Harrisburg v. New York Continental Jewell Filtration Co., 282.
"Notice."—Clinchfield Coal Corporation v. Steinman, 585.
"Not paying license or tax elsewhere."—Northern Commercial Co. v. United States, 143.
"Or."—Northern Commercial Co. v. United States, 143.
"Personal contract."—Benner Line v. Pendleton, 349.
"Personal obligation."—Midland Guaranty & Trust Co. v. Douglas County, 274.
"Positive head."—City of Harrisburg v. New York Continental Jewell Filtration Co., 282.
"Prior use."—Diamond Patent Co. v. S. E. Carr Co., 310.
"Probable consequence."—Armour & Co. v. Harcrow, 218.
"Proceeding in bankruptcy."—In re Breyer Printing Co., 82.
"Public wharf."—Northern Commercial Co. v. United States, 140.
"Referee."—Peck v. Richter, 590.
"Representative."—Wilckens v. Wilckens, 202.
"Res judicata."—Stearns Salt & Lumber Co. v. Hammond, 411.
"Running."—Canton Ins. Office v. Independent Transp. Co., 207.
"Substantial equivalent."—Schiebel Toy & Novelty Co. v. Clark, 490.

"Substantially as described."—National Tube Co. v. Mark, 13.
"Suit against the United States."—Magruder v. Belle Fourche Valley Water Users' Ass'n, 524.
"Transitory action."—Kentucky Coal Lands Co. v. Mineral Development Co., 151.
"Underwriting."—Busch v. Stromberg-Carlson Tel. Mfg. Co., 244.
"Volunteer."—McKinnon v. New York Assets Realization Co., 255.
"Wire of shoes."—W. H. McElwain Co. v. Bullock, 634.

WRITS.

See Habeas Corpus; Injunction.
Of error, see Appeal and Error.

WEST PUBLISHING CO., PRINTERS, ST. PAUL, MINN.